Technical Documentation

Project guide

G70ME-C10.58

Project guide **G70ME-C10.58**
Document No..... **7020-0334-01ppr July 2026**
Revision..... **1.0**

Everllence
Teglholmsgade 41
DK-2450 Copenhagen SV

Phone +45 3385 1100
www.everllence.com

Copyright © 2025 Everllence
All rights reserved, including reprinting, copying (Xerox/microfiche) and translation.

1 Preface

Everllence B&W G70ME-C10.58

Project guide

Electronically controlled

two-stroke engine

This project guide is intended to provide the information necessary for the layout of a marine propulsion plant.

The information is **preliminary**, intended for the project stage only, and subject to modification in the interest of technical progress. The project guide provides the general technical data available at the date of issue.

It should be noted that all figures, values, measurements, or information about performance stated in this project guide are **for guidance only** and should not be used for detailed design purposes, or as a substitute for specific drawings and instructions prepared for such purposes.

Data update

Data not finally calculated at the time of issue is marked 'Available on request'. Such data may be made available at a later date, however, for a specific project the data can be requested. Page and table entries marked 'Not applicable' represent an option, function, or selection which is not valid.

Download updated individual project guide sections (single sheets) and complete books at: http://everllence.com

Edition 1.0

July 2026

While remaining the same legal entity, MAN Energy Solutions SE has been renamed to Everllence SE and its products are being rebranded from "MAN"and/or "MAN Energy Solutions" to "Everllence". As this is an ongoing process, any reference to "MAN" and/or "MAN Energy Solutions" is actually a reference to "Everllence".

All data provided in this document is non-binding. This data serves informational purposes only and is especially not guaranteed in any way.

Depending on the subsequent specific individual projects, the relevant data may be subject to changes and will be assessed and determined individually for each project. This will depend on the particular characteristics of each individual project, especially specific site and operational conditions.

If this document is delivered in another language than English and doubts arise concerning the translation, the English text shall prevail.

Everllence
Teglholmsgade 41
DK-2450 Copenhagen SV
Denmark
Telephone +45 33 85 11 00
info-cph@everllence.com
www.everllence.com

Copyright 2026 © Everllence, filial af Everllence SE, Tyskland, registered with the Danish Commerce and Companies Agency under CVR Nr.: 31611792, (herein referred to as "Everllence").

This document is the product and property of Everllence and is protected by applicable copyright laws. Subject to modification in the interest of technical progress. Reproduction permitted provided source is given.
7020-0334-01ppr July 2026

Table of contents

01 Engine Design

Engine optimisation 1.01
Engine type designation 1.02
Power, speed and fuel oil 1.03
Engine power range and fuel oil consumption 1.04
Performance curves 1.05
General engine description 1.06
Engine cross section - TII 1.07
Engine cross section - TIII 1.07

02 Engine Layout and Load Diagrams, SFOC, dot 5

Propeller layout and engine matching with margins 2.01
Optimum propeller speed 2.02
Engine layout and load diagram 2.03
Load diagram for an actual project 2.04
SFOC guarantee conditions 2.05
Fuel consumption in an arbitrary operating point 2.06

03 Turbocharger Selection & Exhaust Gas Bypass

Turbocharger selection 3.01
Climate conditions and exhaust gas bypass 3.02
Emission control 3.03

04 Electricity Production

Electricity production and hybrid solutions 4.01
Power take-off solutions supplied by RENK 4.02
Steps for obtaining approval of a PTO solution 4.03
Power take off/gear constant ratio 4.04
Waste heat recovery systems - TII 4.05
L21/31 Mk. 2 GenSet data 4.06
L23/30 Mk. 2 GenSet data 4.07
L23/30 Mk. 3 GenSet data 4.08
L27/38 GenSet data 4.09

L27/38 Mk. 2 GenSet data 4.10

05 Installation Aspects

Space requirements and overhaul 5.01

Space requirement 5.02

Crane beam requirements - turbocharger and air cooler 5.03

Engine room cranes - requirements and applications 5.04

Engine outline, galleries and pipe connections 5.05

Engine and gallery outline - TII 5.06

Centre of gravity - TII 5.07

Centre of gravity - TIII 5.07

Water and oil calculation - TII 5.08

Water and oil calculation - TIII 5.08

Engine pipe connections - TII 5.09

Engine pipe connections - TIII 5.09

Counterflanges dimensions for connections D, E and EB 5.10

Engine seating and arrangement of holding down bolts 5.11

Epoxy chocks arrangement 5.12

Engine top bracing 5.13

Mechanical top bracing - T III 5.14

Hydraulic top bracing arrangement - TIII 5.15

Components for engine control system 5.16

Shaftline earthing device 5.17

Alpha CPP and Alphatronic propulsion control 5.18

06 List of Capacities: Pumps, Coolers & Exhaust Gas

Calculation of List of Capacities 6.01

List of capacities for cooling water systems 6.02

List of capacities 6.03

Auxiliary machinery capacities derated engines 6.04

07 Fuel

Fuel oil system 7.01

Fuel oils 7.02

Fuel oil pipes and drain pipes 7.03

Insulation and heat tracing of fuel oil piping 7.04

Components for Fuel Oil System 7.05

08 Lubricating Oil

Lubricating and cooling oil system 8.01

Hydraulic power supply unit 8.02

Lubricating oil pipes for turbochargers 8.03

System oil list, consumption and cleaning 8.04

Components and installation 8.05

Lubricating oil bottom tank 8.06

Venting and drain pipes 8.07

Turbocharger lubricating oil system 8.08

Hydraulic control oil system 8.09

09 Cylinder Lubrication

Cylinder oil specification and system description 9.01

Alpha ACC cylinder lubrication system 9.02

10 Piston Rod Stuffing Box Drain Oil

Stuffing box drain oil system 10.01

11 Low-temperature Cooling Water

Low-temperature cooling water system 11.01

Central cooling water system 11.02

Components for central cooling water system 11.03

Seawater cooling system 11.04

Components for seawater cooling system 11.05

Combined cooling water system 11.06

Components for combined cooling water system 11.07

Cooling water pipes for scavenge air cooler 11.08

12 High-temperature Cooling Water

High-temperature cooling water system 12.01

Components 12.02

Jacket cooling water pipes 12.03

13 Starting and Control Air

Starting and control air systems 13.01

Components for starting air system 13.02

Piping 13.03
Electric motor for turning gear 13.04

14 Scavenge Air

Scavenge air system 14.01
Auxiliary blowers 14.02
Scavenge air pipes 14.03
Electric motor for auxiliary blower 14.04
Scavenge air cooler cleaning system 14.05
Scavenge air box drain system 14.06
Fire extinguishing systems for scavenge air space 14.07

15 Exhaust Gas

Exhaust gas system 15.01
Piping and cleaning systems 15.02
Exhaust gas system for main engine 15.03
System components 15.04
Calculation of exhaust gas back pressure 15.05
Forces and moments at turbocharger 15.06
Diameter of exhaust gas pipes 15.07

16 Engine Control System

Control system layout, control units and interfaces 16.01

17 Vibration Aspects

Vibration aspects 17.01
First and second order moments 17.02
Electrically Driven Moment Compensator 17.03
Power related unbalance 17.04
Guide force moments 17.05
Axial and torsional vibrations 17.06
External forces and moments 17.07

18 Monitoring Systems and Instrumentation

Monitoring systems and instrumentation 18.01
Engine management services 18.02
Condition monitoring system CoCoS-EDS 18.03

Slow down and shut down 18.04
Local instruments 18.05
Engine protection systems and alarms 18.06
Identification of instruments 18.07

19 Dispatch Pattern, Testing, Spares and Tools

Dispatch pattern, testing, spares and tools 19.01
Specification for painting of main engine 19.02
Dispatch Pattern 19.03
Dispatch pattern, list of masses and dimensions 19.04
Shop test 19.05
List of spare parts, unrestricted service 19.06
Additional spares 19.07
Wearing Parts 19.08
Large spare parts, dimensions and masses 19.09
List of standard tools for maintenance 19.10
Tool panels 19.11
Optional tools 19.12

20 Project Support and Documentation

Project support and documentation 20.01
CEAS and Engine selection guide applications 20.02
Extent of delivery 20.03
Installation documentation 20.04

21 Appendix

Symbols for piping and instrumentation diagrams 21.00
List of abbreviations 21.01
Chemical nomenclature 21.02

This page is intentionally left blank

01 Engine Design
02 Engine Layout and Load Diagrams, SFOC, dot 5
03 Turbocharger Selection & Exhaust Gas Bypass
04 Electricity Production
05 Installation Aspects
06 List of Capacities: Pumps, Coolers & Exhaust Gas
07 Fuel
08 Lubricating Oil
09 Cylinder Lubrication
10 Piston Rod Stuffing Box Drain Oil
11 Low-temperature Cooling Water
12 High-temperature Cooling Water
13 Starting and Control Air
14 Scavenge Air
15 Exhaust Gas
16 Engine Control System
17 Vibration Aspects
18 Monitoring Systems and Instrumentation
19 Dispatch Pattern, Testing, Spares and Tools
20 Project Support and Documentation
21 Appendix

This page is intentionally left blank

Engine optimisation

The ever valid requirement of ship operators is to obtain the lowest total operational costs, and especially the lowest possible specific fuel oil consumption at any load, and under the prevailing operating conditions.

However, low-speed two-stroke main engines of the MC-C type, with a chain driven camshaft, have limited flexibility with regard to fuel injection and exhaust valve activation, which are the two most important factors in adjusting the engine to match the prevailing operating conditions.

A system with electronically controlled hydraulic activation provides the required flexibility, and such systems form the core of the ME engine control system, described later in detail in Chapter 16.

Concept of the ME engine

The ME engine concept consists of a hydraulic mechanical system for activation of the fuel injection and the exhaust valves. The actuators are electronically controlled by a number of control units forming the complete engine control system.

Everllence has specifically developed both the hardware and the software in-house, in order to obtain an integrated solution for the engine control system.

The fuel pressure booster consists of a simple plunger powered by a hydraulic piston activated by oil pressure. The oil pressure is controlled by an electronically controlled proportional valve.

The exhaust valve is opened hydraulically by means of a two-stroke exhaust valve actuator activated by the control oil from an electronically controlled proportional valve. The exhaust valves are closed by the ‘air spring’.

In the hydraulic system, the normal lube oil is used as the medium. It is filtered and pressurised by a hydraulic power supply unit mounted on the engine or placed in the engine room.

The starting valves are opened pneumatically by electronically controlled ‘On/Off’ valves, which make it possible to dispense with the mechanically activated starting air distributor.

By electronic control of the fuel injection and exhaust valves according to the measured instantaneous crankshaft position, the Engine Control System fully controls the combustion process.

System flexibility is obtained by means of different ‘Engine running modes’, which are selected either automatically, depending on the operating conditions, or manually by the operator to meet specific goals. The basic running mode is ‘Fuel economy mode’ to comply with IMO NO_x emission limitation.

Engine design and IMO regulation compliance

The ME-C engine is the shorter, more compact version of the ME engine. It is well suited wherever a small engine room is requested, for instance in container vessels.

For Everllence B&W ME/ME-C-TII designated engines, the design and performance parameters comply with the International Maritime Organisation (IMO) Tier II emission regulations.

For engines built to comply with IMO Tier I emission regulations, please refer to the marine engine IMO Tier I project guide.

2025-06-16 - en

Tier II fuel optimisation

NO_x regulations place a limit on the SFOC on two-stroke engines. In general, NO_x emissions will increase if SFOC is decreased and vice versa. In the standard configuration, Everllence B&W engines are optimised close to the IMO NO_x limit and, therefore, NO_x emissions cannot be further increased.

The IMO NO_x limit is given as a weighted average of the NO_x emission at 25, 50, 75 and 100% load. This relationship can be utilised to tilt the SFOC profile over the load range. This means that SFOC can be reduced at part load or low load at the expense of a higher SFOC in the high-load range without exceeding the IMO NO_x limit.

Optimisation of SFOC in the part-load (50-85%) or low-load (25-70%) range requires selection of a tuning method:

- EGB: Exhaust gas bypass
- HPT: High-pressure tuning (on request and only for ME-C).

Each tuning method makes it possible to optimise the fuel consumption when normally operating at low loads, while maintaining the possibility of operating at high load when needed.

The tuning methods are available for all SMCR in the specific engine layout diagram but they cannot be combined. The specific SFOC reduction potentials of the EGB tuning method in part- and low-load are shown in Section 1.03.

For engine types 40 and smaller, as well as for larger types with conventional turbochargers, only high-load optimisation is applicable.

In general, data in this project guide is based on high-load optimisation unless explicitly noted. For part- and low-load optimisation, calculations can be made in the CEAS application described in Section 20.02.

2025-06-16 - en

Engine type designation

6 G 95 M E -C 9 .5 -GI -TII

- **-TII** — Emission regulation
  - **TII** IMO Tier level
- **-GI** — Fuel injection concept
  - (blank) Fuel oil only
  - **GI** Gas injection
  - **LGI** Liquid Gas injection
- **.5** — Version number
- **9** — Mark number
- **-C** — Design
  - **B** Exhaust valve controlled by camshaft
  - **C** Compact engine
- **E** — Concept
  - **E** Electronically controlled
  - **C** Camshaft controlled
- **M** — Engine programme
- **95** — Diameter of piston in cm
- **G** — Stroke/bore ratio
  - **G** 'Green' Ultra long stroke
  - **S** Super long stroke
  - **L** Long stroke
  - **K** Short stroke
- **6** — Number of cylinders

2025-03-24 - en

This page is intentionally left blank

2025-03-24 - en

Power, speed and fuel oil

Tier II Tier III

Everllence B&W G70ME-C10.58

Cyl.	L_1 kW
5	15,850
6	19,020

Stroke: 3,256 mm/**L_1 MEP:** 19.0 bar

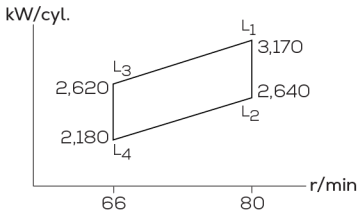

Everllence B&W G70ME-C10.58

L_1 SFOC [g/kWh]			
Opt. load range	**50%**	**75%**	**100%**
Low-load EGB	158.0	158.0	164.5

Everllence B&W G70ME-C10.58-EGRBP

L_1 SFOC [g/kWh]			
	50%	**75%**	**100%**
Tier II mode	159.5	160.5	168.0
Tier III mode	164.5	165.0	171.5

Everllence B&W G70ME-C10.58-EcoEGR

L_1 SFOC [g/kWh]			
	50%	**75%**	**100%**
Tier II mode	156.5	155.0	162.5
Tier III mode	162.5	162.0	167.5

Everllence B&W G70ME-C10.58-HPSCR

L_1 SFOC [g/kWh]			
	50%	**75%**	**100%**
Tier II mode	157.5	158.0	164.5
Tier III mode	158.5	158.5	165.0

Fig. 1.03.01: Power, speed and fuel oil

SFOC for derated engines can be calculated in the CEAS engine application at www.everllence.com

2026-06-23 - en

This page is intentionally left blank

2026-06-23 - en

Engine power range and fuel oil consumption

Engine power

The following tables contain data regarding the power, speed and specific fuel oil consumption of the engine.

Engine power is specified in kW for each cylinder number and layout points L_1, L_2, L_3 and L_4.

Discrepancies between kW and metric horsepower (1 BHP = 75 kpm/s = 0.7355 kW) are a consequence of the rounding off of the BHP values.

L_1 designates nominal maximum continuous rating (nominal MCR), at 100% engine power and 100% engine speed.

L_2, L_3 and L_4 designate layout points at the other three corners of the layout area, chosen for easy reference.

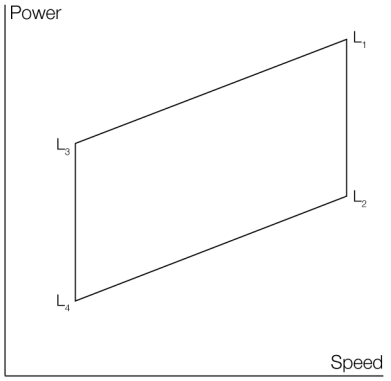

178 51 48-9.0

Fig. 1.04.01: Layout diagram for engine power and speed

Overload corresponds to 110% of the power at MCR, and may be permitted for a limited period of one hour every 12 hours.

The engine power figures given in the tables remain valid up to tropical conditions at sea level as stated in IACS M28 (1978), i.e.:

Blower inlet temperature ..... 45°C
Blower inlet pressure .....1,000 mbar
Seawater temperature ..... 32°C
Relative humidity 60%

Specific fuel oil consumption (SFOC)

The figures given in this folder represent the values obtained when the engine and turbocharger are matched with a view to obtaining the lowest possible SFOC values while also fulfilling the IMO NO_X Tier II emission limitations.

Stricter emission limits can be met on request, using proven technologies.

The SFOC figures are given in g/kWh with a tolerance of 5% (at 100% SMCR) and are based on the use of fuel with a lower calorific value of 42,700 kJ/kg (~10,200 kcal/kg) at ISO conditions:

2025-03-24 - en

Ambient air pressure .....1,000 mbar
Ambient air temperature ..... 25°C
Cooling water temperature ..... 25°C

Although the engine will develop the power specified up to tropical ambient conditions, specific fuel oil consumption varies with ambient conditions and fuel oil lower calorific value. For calculation of these changes, see Chapter 2.

Lubricating oil data

The cylinder oil consumption figures stated in the tables are valid under normal conditions.

During running-in periods and under special conditions, feed rates of up to 1.5 times the stated values should be used.

2025-03-24 - en

Performance curves

Updated engine and capacities data is available from the CEAS program on https://www.everllence.com/marine/products/planning-tools-and-downloads/ceas-engine-calculations/.

2025-06-16 - en

This page is intentionally left blank

2025-06-16 - en

General engine description

General

Engines built by licensees of Everllence are in accordance with our drawings and standards. In certain cases, local standards may be applied but all spare parts are interchangeable with parts designed by Everllence. Some components may differ from the design of Everllence because of local production facilities, or the application of local standard components.

This section gives a general description of main engine components and fuel oil components valid for all engine types. Descriptions of second fuel (SF) components refer to our dual-fueled engines, i.e., ME-LGI and ME-GI engine variants.

Bedplate and main bearing

The bedplate consists of high welded longitudinal girders and welded cross girders with cast steel bearing supports. Long elastic holding-down bolts and hydraulic tightening tools are used to fit the bedplate to the engine seating in the ship. The bedplate is made with the thrust bearing in the aft end.

For engines mounted on epoxy chocks, the bedplate is made without taper.

An oil pan made of steel plate is welded to the bedplate. The oil pan collects return oil from the forced lubricating and cooling oil system. Oil outlets from the oil pan are vertical as standard and provided with gratings.

The main bearings consist of thin-walled steel shells lined with white metal. The main bearing bottom shell can be rotated out and in with special tools and hydraulic tools for lifting the crankshaft. A bearing cap keeps the shells in position.

Frame box

The frame box is welded. On the exhaust side of the frame box, a relief valve is mounted for each cylinder. On the manoeuvring side, each cylinder has a large hinged door. Crosshead guides are welded onto the frame box. The frame box is bolted to the bedplate. Stay bolts tighten together bedplate, frame box, and cylinder frame. The frame box is of the well-proven triangular guide-plane design with twin stay bolts giving excellent support for the guide shoe forces.

Cylinder frame and stuffing box

For the cylinder frame, two possibilities are available:

- Nodular cast iron
- Welded design with integrated scavenge air receiver.

The cylinder frame has access covers for cleaning the scavenge air space, if required, and for inspection of scavenge ports and piston rings from the manoeuvring side. The cylinder frame and cylinder liner form the scavenge air space.

2026-01-23 - en

The cylinder frame is fitted with pipes for the piston cooling oil inlet. The scavenge air receiver, turbocharger, air cooler box, and gallery brackets are placed on the cylinder frame. The bottom of the cylinder frame contains the piston rod stuffing box with sealing rings for scavenge air, and oil scraper rings preventing crankcase oil from entering the scavenge air space.

Scavenge air space and piston rod stuffing box drains are located in the bottom of the cylinder frame.

Cylinder liner

A cylinder liner made of alloyed cast iron is suspended in the cylinder frame with a low-situated flange. The top of the cylinder liner is fitted with a cooling jacket. The cylinder liner has scavenge ports and drilled holes for cylinder lubrication.

Cylinder cover

The cylinder cover is attached to the cylinder frame with studs and nuts tightened with hydraulic jacks. The cylinder cover of forged steel is made in one piece with bores for cooling water, fuel valves, starting valve, indicator valve, and a central bore for the exhaust valve. The bore for the indicator valve is also used for PMI (pressure mean indicated) Auto-tuning by connecting the PMI pressure transducer.

For dual-fuel engines, the cylinder cover has bores for SF valves, and bores/pipes for supplying and returning SF from the control block to each SF valve. Furthermore, the side of the cylinder cover facing the hydraulic cylinder unit (HCU) block has a face for mounting a special valve block, the SF control block.

Crankshaft

The crankshaft is of the semi-built type made from forged or cast steel throws. Depending on the number of cylinders, the crankshaft may be supplied in two parts.

At the aft end, the crankshaft is provided with:

- a collar for the thrust bearing
- a flange for fitting the gearwheel for the step-up gear to the hydraulic power supply unit
- a flange for the turning wheel and for the coupling bolts to an intermediate shaft.

At the front end, the crankshaft is fitted with a collar for the axial vibration damper and a flange for fitting a tuning wheel. The flange can also be used for power take-off.

Coupling bolts and nuts for joining the crankshaft together with the intermediate shaft are not normally supplied.

Thrust bearing

The propeller thrust is transferred through thrust collar, segments, and bedplate to end chocks and engine seating, and to the ship's hull.

2026-01-23 - en

A thrust bearing of the B&W-Michell type is located in the aft end of the engine. It consists primarily of a thrust collar on the crankshaft, bearing support, and segments of steel lined with white metal.

Engines with nine cylinders or more are specified with a 360-degree type thrust bearing, while a 240-degree type is used for all other engines. The flexible thrust cam design of Everllence is used for the thrust collar on a range of engine types.

The thrust shaft is an integrated part of the crankshaft, and it is lubricated by the engine's lubricating oil system.

Step-up gear

For a mechanically engine-driven hydraulic power supply, the crankshaft drives the main hydraulic oil pumps via a step-up gear. The main engine lubricating oil system lubricates the step-up gear.

Turning gear and turning wheel

The turning wheel is fitted to the thrust shaft, and it is driven by a pinion on the terminal shaft of the turning gear arrangement mounted on the bedplate. An electric motor with a built-in brake drives the turning gear.

A blocking device prevents the main engine from starting when the turning gear is engaged. Engagement and disengagement of the turning gear is done manually by moving the pinion.

The basic design includes a control device for the turning gear, consisting of a starter and manual control box.

Axial vibration damper

The engine is fitted with an axial vibration damper mounted on the fore-end of the crankshaft. The damper consists of a piston and a split-type housing located forward of the foremost main bearing.

The piston is made as an integrated collar on the main crank journal, and the housing is fixed to the main bearing support.

The vibration damper has a mechanical guide to enable a functional check, an optional electronic vibration monitor can be supplied.

Engines Mk. 9 and higher require an axial vibration monitor, which indicates condition checks of the axial vibration damper, and terminals for alarm and slowdown.

Tuning wheel/torsional vibration damper

Depending on the final torsional vibration calculations, it may be necessary to order a tuning wheel or a torsional vibration damper, separately.

Connecting rod

The connecting rod is made of forged or cast steel and provided with bearing caps for the crosshead and crank pin bearings.

The crosshead and crank pin bearing caps are secured to the connecting rod with studs and nuts tightened with hydraulic jacks.

2026-01-23 - en

The crosshead bearing consists of a set of thin-walled steel shells, lined with bearing metal. The crosshead bearing cap is in one piece, with an angular cut out for the piston rod. The crank pin bearing is provided with thin-walled steel shells, lined with bearing metal. Lubricating oil is supplied through ducts in the crosshead and connecting rod.

Piston

The piston consists of a piston crown and a piston skirt. The piston crown is made of heat-resistant steel and the piston skirt is made of cast iron with a bronze band or molybdenum coating.

A piston cleaning ring in the very top of the cylinder liner scrapes off excessive ash and carbon formations on the piston topland.

The piston has three or four ring grooves, which are hard-chrome plated on both the upper and lower surfaces of the grooves. Three or four piston rings are fitted depending on the engine type. The uppermost piston ring is always a controlled pressure relief (CPR) ring type, whereas the other two or three piston rings are either of the CPR type, or have an oblique cut. Depending on the engine type, the uppermost piston ring is higher than the others. All rings are alu-coated on the outer surface for running-in.

Piston rod

The piston rod is of forged steel and the running surface for the stuffing box is surface hardened. The piston rod is connected to the crosshead with four bolts. The piston rod has a central bore which, together with the cooling oil pipe, forms the cooling oil inlet and outlet.

Crosshead

A crosshead of forged steel is provided with cast steel guide shoes with white metal on the running surface. The guide shoe is of the low-friction type, and the crosshead bearings are of the wide pad design. The telescopic pipe for oil inlet and the pipe for oil outlet are mounted on the guide shoes.

Scavenge air system

The turbocharger draws air directly from the engine room through the turbocharger intake silencer. From the turbocharger, the air is led via the charging air pipe, air cooler, and scavenge air receiver to the scavenge ports of the cylinder liners, see Chapter 14. The scavenge air receiver has a D-shape design.

Scavenge air cooler

Each turbocharger has a scavenge air cooler of the mono-block type. The scavenge air cooler is most commonly cooled by freshwater from a central cooling system. Alternatively, it can be cooled by seawater from a seawater cooling system, or from a combined cooling system with separate seawater and freshwater pumps.

2026-01-23 - en

Auxiliary blower

The engine is provided with electrically-driven scavenge air blowers integrated in the scavenge air cooler. The suction side of the blowers is connected to the scavenge air space after the air cooler.

Between the air cooler and the scavenge air receiver, non-return valves are fitted, which automatically close when the auxiliary blowers supply the air.

To obtain a safe start, the auxiliary blowers start consecutively before the engine is started to ensure sufficient scavenge air pressure. Find more information in Chapter 14.

Exhaust gas system

From the exhaust valves, exhaust gas is led to the exhaust gas receiver where the fluctuating pressure from the individual cylinders is equalised, and the total volume of gas is led to the turbocharger(s). After the turbocharger(s), the gas is led to the external exhaust gas piping system.

Compensators are fitted between the exhaust valves and the receiver, and between the receiver and the turbocharger(s).

The exhaust gas receiver and exhaust gas piping are insulated and covered by galvanised steel plating.

A protective grating is installed between the exhaust gas receiver and the turbocharger.

Exhaust gas turbocharger

The engines can be fitted with either Everllence, Accelleron or MHI turbochargers. Project Guide Chapter 3 describes the turbocharger selection, and Chapter 15 describes the exhaust gas system.

Reversing

The engine is reversed electronically by the engine control system, which changes the timing of fuel injection, exhaust valve activation, and starting air admission.

2nd order moment compensators

In general, 2nd order moment compensators are relevant only for 5- and 6-cylinder engines of 50- and 45-bore sizes. When needed, an external electrically driven moment compensator, type RotComp or similar, can be installed in the steering room. Project Guide Section 17.02 describes 2nd order moment compensators as well as the basic design and options.

Hydraulic power supply

The hydraulic power supply (HPS) filters and pressurises normal engine lubricating oil for the hydraulic system. The HPS consists of mechanically driven (by the engine) main pumps and either mechanically or electrically driven start-up pumps.

2026-01-23 - en

The engine-driven HPS is mounted aft on the engine, for engines with the chain drive placed aft (eight cylinders or less). For engines with the chain drive placed in the middle (nine cylinders or more), the HPS is placed in the middle. Usually, the combined HPS is mounted aft on the engine.

Project Guide Section 8.02 describes the HPS and available configurations.

Hydraulic cylinder unit

The hydraulic cylinder unit (HCU), one per cylinder, consists of a distributor block mounted on a base plate. The distributor block has one or more accumulators to ensure the necessary peak flow of hydraulic oil during the electronically controlled fuel injection.

The distributor block serves as mechanical support for the hydraulically activated fuel pressure booster and the hydraulically activated exhaust valve actuator.

Fuel oil and second fuel injection

The cylinder cover is equipped with conventional fuel oil valves, a starting air valve and an indicator cock. In addition, dual-fuel engines have second fuel valves for injection of second fuel (either methanol, LPG, methane, or ethane).

The cylinder control unit (CCU) of the engine control system (ECS) electronically controls two separate multi-way valves, which activate fuel oil injection and second fuel injection.

The engine has one hydraulically activated fuel oil pressure booster for each cylinder. High-pressure fuel oil admitted from this booster controls the opening of the conventional fuel valves and a spring closes the valves. An automatic vent slide in the fuel valve allows circulation of fuel oil through the valve and high-pressure pipes when the engine is stopped. The vent slide also prevents the compression chamber from being filled up with fuel oil, if the valve spindle sticks. Oil from the vent slide and other drains is led away in a closed system.

The opening of second fuel valves is controlled by a multi-way valve, which operates on control oil taken from the system oil.

Project Guide Chapter 7.00 contains further information about fuel oil and second fuel systems.

Starting air valves

The supply of starting air is provided by one solenoid valve per cylinder, controlled by the CCUs of the ECS. The starting air valve is opened by control air, timed by the ECS, and is closed by a spring. A program incorporated in the basic ECS initiates slow turning before an engine start. Section 13.01 describes the starting air system in detail.

Fuel oil pipes

Fuel oil high-pressure pipes are of the double-walled type with built-in conical support. The pipes are insulated, but not heated. A ‘fuel oil leakage’ system detects leakages, and if a leakage is detected, it immediately stops the injection on the affected cylinder.

2026-01-23 - en

Second fuel pipes for dual-fueled engines

A chain pipe system distributes second fuel to each adapter block. The chain pipes are connected to the second fuel control block via the adapter block.

Second fuel pipes are double walled, with the outer shielding pipe designed to prevent second fuel outflow to the machinery space if leakages occur, or if the inner fuel pipe ruptures.

A separate mechanical ventilation system with a capacity of 30 air changes per hour vents the intervening second fuel pipe space, including the space around valves, flanges, etc. Any second fuel leakage is led to the ventilated part of the double-walled piping system where hydrocarbon (HC) sensors detect the leakage. The pressure in the intervening fuel pipe space is kept below the engine room pressure. The extractor fan motor is placed outside the duct and the machinery space. Ventilation inlet air must be drawn from a second fuel safe area and exhausted to a safe place.

The second fuel pipes on the engine are designed for, and pressure tested at a pressure, which is 50% higher than the normal working pressure. Second fuel pipes are supported to avoid mechanical vibrations, and they should be protected against drops of heavy items as well.

The chain piping to the individual cylinders is flexible to cope with mechanical stress from the thermal expansion of the engine when going from cold to hot conditions.

The second fuel pipe system is designed to avoid excessive second fuel pressure fluctuations during operation.

The second fuel pipes must be connected to an inert gas purging system.

Second fuel control block for dual-fueled engines

The second fuel control block consists of a square steel block bolted to the HCU side of the cylinder cover. The control block incorporates one or more accumulators, ensuring a stable second fuel supply pressure to fuel injection valves.

Minute volumes around the second fuel injection valves in the cylinder cover are kept under vacuum by venting air from the double-walled second fuel pipes.

Internal bores in the control block connect hydraulic oil, sealing oil, low-pressure oil, and second fuel with the cylinder cover and the various valves mounted on the cover.

Depending on the design, a combination of multiway valves is also incorporated in the control block. These electrically controlled valves control the activation of the second fuel injection valve and the window valve using control oil.

From the accumulator, second fuel passes through a bore in the second fuel control block to the window valve, which in dual-fuel mode is opened and closed by hydraulic oil in each cycle. From the window valve, second fuel is led via bores in the second fuel control block and in the cylinder cover to the second fuel injection valves.

2026-01-23 - en

The fuel pressure in the channel between the window valve and the second fuel injection valve is measured to monitor the function of the window valve and the second fuel injection valve, and to detect if any of these are leaking. The safety system will detect larger pressure changes and shut down second fuel injection.

Purge block for dual-fueled engines

The SF purge block is a separate steel block, which is bolted onto the end adapter block on the last cylinder. The SF purge block serves the combined function of non-return valve, control valve, and safety valve for the inert gas system, ensuring that SF cannot pass into the inert gas system, while it allows inert gas to pass into the SF pipe line during purging of the system.

The purge block supplies nitrogen to the second fuel injection system during purging. A double block-and-bleed-valve setup controls the purging sequences. The purge block also contains the connection for ventilation air.

Exhaust valve

The exhaust valve consists of the valve housing with a spindle guide and the valve spindle. The valve housing is made of cast iron and is arranged for water cooling. The housing is provided with a water-cooled bottom piece of steel with a flame-hardened seat of the Wide-seat design. The exhaust valve spindle is made of Alloy 760.

The exhaust valve is tightened to the cylinder cover with studs and nuts. The electronic valve activation system opens the exhaust valve hydraulically and an air spring closes the valve.

The exhaust valve is of the low-force design. A multi-way valve controls the operation of the exhaust valve. In operation, the valve spindle rotates slowly, driven by the exhaust gas acting on a vane wheel fixed to the spindle.

Sealing of the exhaust valve spindle guide is obtained with an oil bath, or controlled oil level (COL), in the bottom of the air cylinder above the sealing ring. This oil bath lubricates the exhaust valve spindle guide and sealing ring.

Everllence B&W Alpha cylinder lubrication

The electronically controlled Everllence B&W Alpha cylinder lubrication system is applied to ME engines, and controlled by the ME ECS. The main advantages of the Everllence B&W Alpha cylinder lubrication system, compared with the conventional mechanical lubricator, are:

- Improved injection timing
- Increased dosage flexibility
- Constant injection pressure
- Improved oil distribution in the cylinder liner
- Possibility for prelubrication before starting.

Project Guide Chapter 9 details information about the cylinder lubrication system.

2026-01-23 - en

Gallery arrangement

The engine is provided with gallery brackets, stanchions, railings, and platforms (exclusive of ladders). The positions of the brackets are carefully chosen to provide the best possible overhauling and inspection conditions.

Some of the main pipes for the engine are suspended from the gallery brackets, and the topmost gallery platform on the manoeuvring side has holes for overhauling pistons.

The engine is prepared for installation of top bracings on the exhaust side, or on the manoeuvring side.

Piping arrangements

The engine is delivered with piping arrangements for:

- Fuel oil
- Second fuel (dual-fuel engines)
- Heating of fuel oil
- Lubricating oil, piston cooling oil, hydraulic oil, and sealing oil for second fuel injection valves for dual-fueled engine
- Cylinder lubricating oil
- Cooling water to scavenge air cooler
- Jacket and turbocharger cooling water
- Cleaning of turbocharger
- Fire extinguishing in scavenge air space
- Starting air
- Control air
- Various drain pipes.

All piping arrangements are made of steel piping, except the piping for control air and steam heating of fuel pipes, which is of copper. The piping has sockets for local instruments, alarm and safety equipment, and several sockets for supplementary signal equipment. Chapter 18 contains more information about instrumentation.

2026-01-23 - en

This page is intentionally left blank

2026-01-23 - en

Engine cross section - TII

General

This section is available on request

2025-12-17 - en

This page is intentionally left blank

Engine cross section - TIII

General

This section is available on request

2025-12-17 - en

This page is intentionally left blank

01 Engine Design
02 Engine Layout and Load Diagrams, SFOC, dot 5
03 Turbocharger Selection & Exhaust Gas Bypass
04 Electricity Production
05 Installation Aspects
06 List of Capacities: Pumps, Coolers & Exhaust Gas
07 Fuel
08 Lubricating Oil
09 Cylinder Lubrication
10 Piston Rod Stuffing Box Drain Oil
11 Low-temperature Cooling Water
12 High-temperature Cooling Water
13 Starting and Control Air
14 Scavenge Air
15 Exhaust Gas
16 Engine Control System
17 Vibration Aspects
18 Monitoring Systems and Instrumentation
19 Dispatch Pattern, Testing, Spares and Tools
20 Project Support and Documentation
21 Appendix

This page is intentionally left blank

Propeller layout and engine matching with margins

The combination of speed and power obtained for the design condition of the ship may be called the propeller design point (PD). PD is placed on the light running propeller curve, in Fig. 2.01.01.

Some shipyards, and/or propeller manufacturers occasionally use an alternative propeller design point (PD') for the propeller design. To reflect average conditions at sea, PD' incorporates all or part of the so-called sea margin described later.

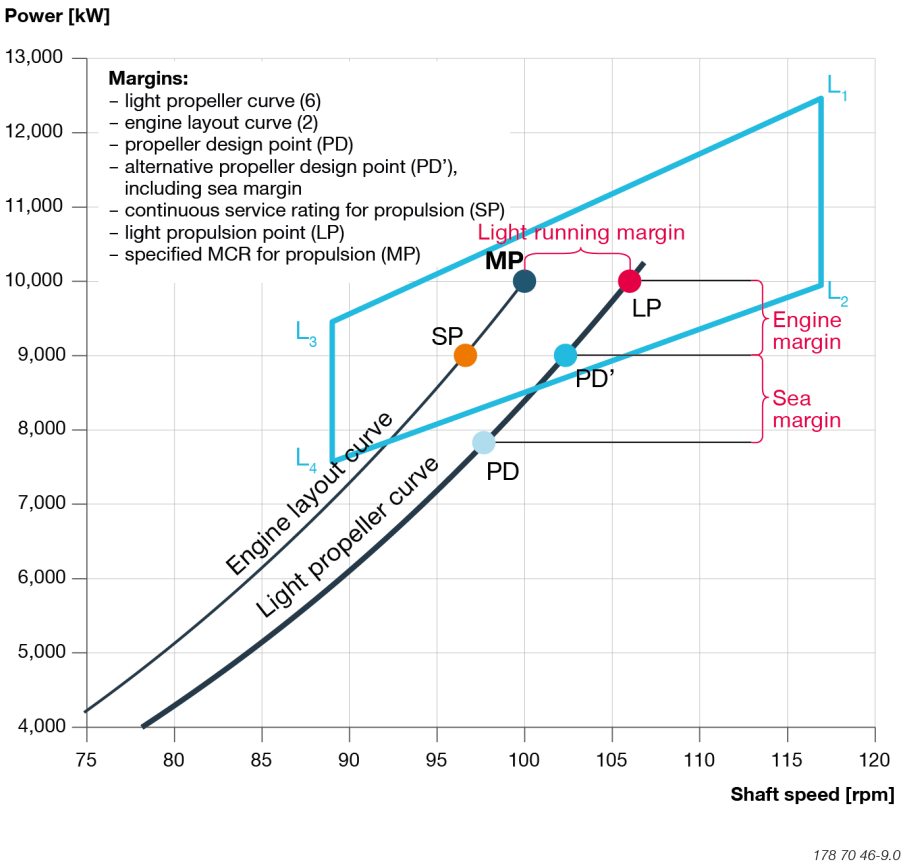

Fig. 2.01.01: Light propeller curve with margins added to establish the specified MCR for propulsion (MP) within a layout area for a specific engine

The service propulsion point (SP) on the engine layout curve is obtained by adding the sea margin, and the light running margin to the propeller design point (PD).

The specified MCR for propulsion, attained by including all margins described in the following sections, must be placed within the layout area. See the later section "Engine layout limitations" for further information.

2025-06-16 - en

Sea margin

As the sea is rarely completely calm and a wind often blows, the ship will experience increased resistance from wind and waves in average conditions. When determining the necessary engine power it is normal practice to add a power margin, the so-called sea margin. The sea margin ensures that the ship can maintain the design speed in average conditions at sea.

Traditionally, the sea margin has been approximately 15% of the power required to achieve the design speed with a clean hull in calm weather (PD). As ship design speeds reduce, it can be necessary to increase the sea margin since the resistance experienced by the ship is not reduced. If allowed by the EEDI regulation, it can be sensible to use a larger margin for ships often operating in heavy weather.

Engine margin

Often an engine owner will not permit 100% utilisation of engine power for normal operation due to the increase of the fuel consumption and the reduction of the power reserve. Therefore an engine margin of 10 to 15% is included to operate the engine at 90 or 85% load at the service propulsion point. Higher margins have been experienced for specific trades or reasons. If allowed by the EEDI regulation, a high engine margin is typically preferred for ships in scheduled traffic to make it possible to catch up with delays.

The engine margin can be increased for ships with a shaft generator, see the later section 2.03.

Light running margin

When the ship has sailed for some time, the hull and propeller becomes fouled. This will increase the hull resistance, and reduce the ship speed unless the engine delivers more power to the propeller to maintain the speed. As a result, the propeller will require more torque and the engine will be heavier loaded and heavy running (HR), which requires an increased torque from the engine.

When determining the necessary engine layout speed, the influence of a heavy running propeller and operation with increased vessel resistance must be considered. Therefore it is recommended to use a heavier propeller curve for the layout of the engine. The propeller curve for clean hull, and calm weather may then represent a "light running" (LR) propeller, whereas the engine layout curve represents a propeller curve in heavy weather, or with heavy fouling.

Everllence recommends using a light running margin (LRM) of normally **4.0–7.0%**, however, for special cases up to **10%**. It means that for a given engine power, the light running propeller rpm is 4.0–10.0% higher than the rpm given on the engine layout curve. Or, conversely, the engine is specified to a speed 4.0–7.0% lower than given on the design light propeller curve.

The point attained in the engine layout diagram, after shifting the propeller curve (containing the sea and engine margins) by the light running margin, is termed the “specified MCR for propulsion” point (MP).

2025-06-16 - en

The high end of the range (7–10%) is primarily intended for vessels often operating in adverse conditions with a heavy running propeller. Low-powered EEDI ships such as tankers, and bulkers with blunt bows may also experience an operational benefit from a relatively high light-running margin.

Vessels with shaft generators, or vessels with high ice classes can also benefit from a light running margin in the high range, or in special cases even beyond 10%. It makes it possible to keep the shaft generator and power take-off (PTO) in operation for longer periods at sea. See the later guidance on PTO layout limits.

The SMCR values of engine power (SMCRpower) and speed (SMCRspeed) when including the margins can be calculated using equations 2.01.01 and 2.01.02.

Eg. 2.01.01

$$SMCR_{power} = PD_{power} \times \frac{\frac{100 + SM}{100}}{\frac{100 - EM}{100}}$$

178 70 80-3.0

Eg. 2.01.02

$$SMCR_{speed} = PD_{speed} \times \left(\frac{SMCR_{power}}{PD_{power}}\right)^{1/3} \times \left(1 - \frac{LRM}{100}\right)$$

178 70 81-5.0

The recommendation towards LRM is applicable to all draughts at which the ship is intended to operate, whether ballast, design or scantling draught. The recommendation is applicable to engine loads from 50 through 100%. If an average of the measured values between 50% and 100% load is used for verification of the attained light running margin, this will smoothen out the effect of measurement uncertainty and other variations.

Note on LRM

Light and heavy running, fouling, and sea margin are partially overlapping terms. Light and heavy running of the propeller refers to hull and propeller deterioration, as well as heavy weather and the resulting shift of the propeller curve towards the left in the load diagram. See for example Fig. 2.01.01. This shift stems from the increased torque required by the propeller during encounters of added resistance on the hull, that is, a lower rpm output at the same power.

The light running margin gives a margin towards engine limitations, see section 2.03. This margin ensures that the ship can deliver maximum power in conditions not as ideal as sea trial conditions. If the light running margin was not included, this might not be the case.

The sea margin gives the power margin necessary to maintain the service speed during average sea conditions with added wave and wind resistance. The light running margin ensures that the necessary power is available.

2025-06-16 - en

Within the recommendations for the light running margin, the degree of light running must be decided based on experience from the actual trade, and the hull design of the vessel. In general, slender designs with sharp bows require smaller margins than full-body ships with blunt bows. The latter design results in an increase of the added resistance in adverse weather.

For further information on the effects of engine heavy running, see the later section: "Engine power and speed limits".

2025-06-16 - en

Optimum propeller speed

Propeller diameter and pitch

In general, the following applies: the larger the propeller diameter, D, the lower the optimum propeller speed and the power required for a certain design draught and ship speed, see curve D in Fig. 2.02.01.

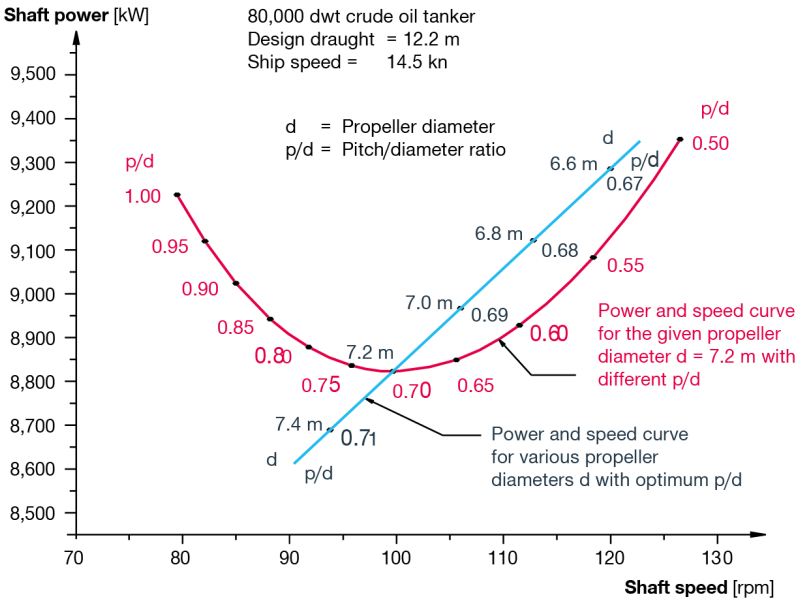

178 70 82-7.0

Fig. 2.02.01: Influence of propeller diameter (D) and pitch on propeller design

The maximum propeller diameter depends on the design draught of the ship and the clearance needed between the propeller, the aft body hull, and the keel.

Fig. 2.02.01 shows an example with an 80,000-dwt crude oil tanker with a design draught of 12.2 m and a design speed of 14.5 knots.

When the propeller diameter is increased from 6.6 m to 7.2 m, the power demand is reduced from approximately 9,290 kW to 8,820 kW. The optimum propeller speed is reduced from 120 rpm to 100 rpm. This corresponds to the constant ship speed coefficient α = 0.28. See the definition of α in the later section “Definition of constant ship speed lines”.

Once a propeller diameter of maximum 7.2 m has been chosen, the corresponding optimum pitch in this point for the design speed of 14.5 knots is P/D = 0.70.

However, if the optimum propeller speed of 100 r/min does not match the preferred or selected main engine speed, a change of pitch away from the optimum will only cause a relatively small extra power demand. It will then be possible to keep the same maximum propeller diameter:

- To increase engine revolutions from 100 rpm to 110 rpm (P/D = 0.62) requires 8,900 kW, that is, an extra power demand of 80 kW
- To decrease engine revolutions from 100 rpm to 91 rpm (P/D = 0.81) requires 8,900 kW, that is, an extra power demand of 80 kW.

2023-01-18 - en

In both cases, the extra power demand is only 0.9%, and the corresponding "equal speed curves" are α = +0.1, and α = -0.1, respectively. So there is a certain interval of propeller speeds where the "power penalty" is limited. An interval that can be utilised to accommodate the most fuel-efficient engine.

Definition of constant ship speed lines

Fig. 2.02.02 shows the constant ship speed lines, α. These lines indicate the power required at various propeller speeds to keep the same ship speed, when an optimum pitch/diameter ratio is used.

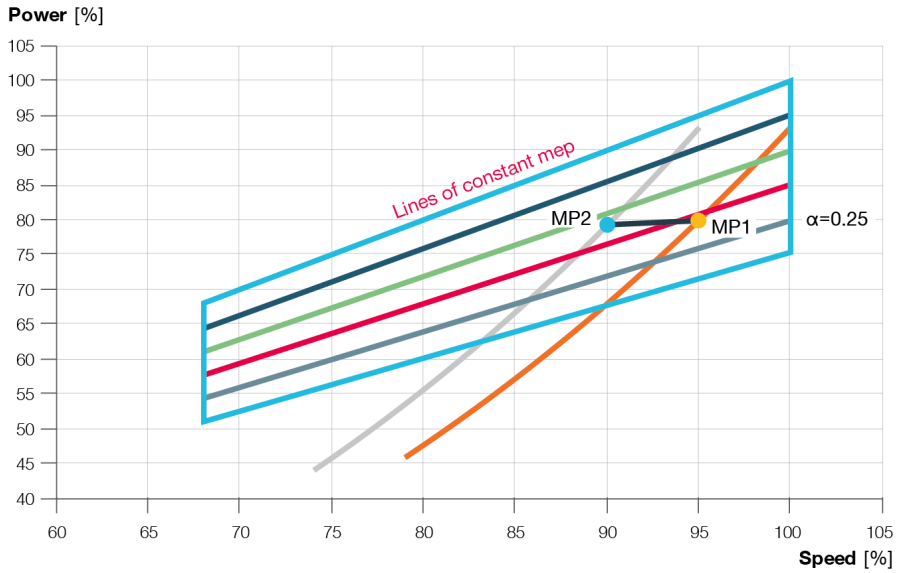

178 70 47-0.0

Fig. 2.02.02: Layout diagram, and constant ship speed lines

Normally, if propellers with an optimum pitch are used, the following relation between the necessary power, P, and the propeller speed, n, can be assumed:

$$P_2 = P_1 \times (n_2 / n_1)^{\alpha}$$

where:

P is the propulsion power

n is the propeller speed

α is the constant ship speed coefficient.

For any combination of power and speed, points on lines which are parallel to the ship speed lines give the same ship speed. If a constant ship speed line is drawn into the layout area through the specified propulsion MCR point, MP1, then another specified propulsion MCR point, MP2, on this line will give the same ship speed.

2023-01-18 - en

Fig. 2.02.02 shows an example of the required power-speed point MP1 through which a constant ship speed curve α = 0.25 is drawn. Thereby, point MP2 is obtained with a lower engine power, and a lower engine speed but with the same ship speed.

Provided the optimum pitch is used for a given propeller diameter, the following data applies when changing the propeller diameter:

- For general cargo, bulk carriers, and tankers: α = 0.20–0.30
- For container vessels, and roll-on/roll-off cargo: α = 0.15–0.25.

When changing the propeller speed by changing the pitch, the α-constant will be different.

2023-01-18 - en

This page is intentionally left blank

2023-01-18 - en

Engine layout and load diagram

Engine layout limitations

As Fig. 2.03.01 shows, an engine's layout diagram is limited by:

1. Constant mean effective pressure (MEP) lines (L_1– L_3 and L_2– L_4)
2. Constant engine speed lines (L_1– L_2 and L_3– L_4).

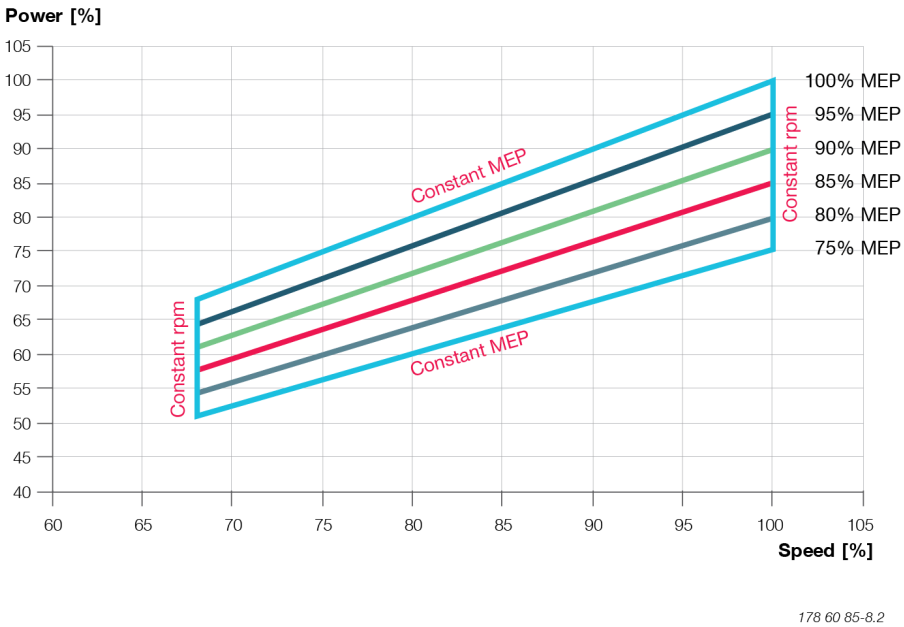

Fig. 2.03.01: Engine layout diagram with limits

Within the layout area, there is complete freedom to select the engine's specified maximum continuous rating (SMCR), point MP, which suits the ship's demand for power and speed.

The nominal maximum continuous rating (NMCR) of an engine design is equivalent to L_1 in the layout area.

The effective power, P, of a combustion engine is proportional to the mean effective pressure, pe, and engine speed, n. The expression for P, where c is a constant, is:

$P = c \times p_e \times n$

For constant mean effective pressure (MEP), the power is proportional to the speed:

$P = c \times n^1$ (for constant MEP)

When running with a fixed pitch propeller (FPP), the power can be expressed according to the propeller law as:

$P = c \propto n^3$ (propeller law)

Although the proportionality, $P \propto k \times V^3$. between the required power and the cubic, i.e. $n_i = 3$, of the speed is often referred to as a law, it is an assumption valid only for frictional resistance. If the ship has sufficient engine power for

2025-06-16 - en

operating at elevated speeds, the wave making resistance must be considered. At elevated ship speeds, V, the exponent can be higher, for example, $P \propto k \times V^4$.

Normally, estimates of the necessary propeller power and speed, n, are based on theoretical calculations for the design condition of the ship, and often also on computer simulations along with experimental tank tests. Calculations and simulations are based on optimum operating conditions, that is, a clean hull, good weather and calm seas.

Specified maximum continuous rating within the layout area

Based on the propulsion and engine running points, the layout diagram of the relevant main engine can be drawn in a power-speed diagram like in Fig. 2.03.01. The SMCR, point MP, must be placed inside the limitation lines of the layout diagram. Otherwise, the propeller speed has to be changed, or another main engine type must be chosen. The selected SMCR influences the mechanical design of the engine, for example, turbocharger, piston shims, liners, and fuel valve nozzles.

Once the specified SMCR has been chosen, the engine design, and the capacities of the auxiliary equipment will be adapted to the SMCR, as reflected in CEAS reports.

If the SMCR is changed later on, it may involve a change of:

- shafting system
- vibrational characteristics
- pump and cooler capacities
- fuel valve nozzles
- piston shims
- cylinder liner cooling, and lubrication.

Furthermore, it may be necessary to re-match the turbocharger, or even to change to a different size of turbocharger. Sometimes, such a change also requires a piping system of larger dimensions. If the specification has to be prepared for a later change of SMCR, it is important to consider this already at the project stage. It can be an option to design the ship with a derated engine, and auxiliaries (coolers, pumps and pipe dimensions, shafting, and so on) that are sufficient for a later uprating of the engine. This engine is termed a dual-rated engine. Note, that EEDI regulations must permit this.

If a dual-rated engine is ordered, it is beneficial to carry out the testing necessary to get the IMO technical file for the alternative SMCR during shop testing of the engine. When testing is done before ship delivery, the more expensive in-ship testing of the engine is avoided. For all fuel variants of the ME-C engines, the timing of fuel injection and the timing of exhaust valve activation are electronically optimised over a wide operating range of the engine. For ME-B engines, only the fuel injection (and not the exhaust valve activation) is electronically controlled over a wide operating range of the engine.

Various tunings are available for pure Tier II engines. These tunings allow optimisation of an engine for the specific needs of a project. There are no tunings available for Tier III engines. See the later section “Example of SFOC curves”.

2025-06-16 - en

Engine load diagram and limitations

Definitions

A load diagram defines the power and speed limits for continuous and overload operation of the installed engine, see Fig. 2.03.02.

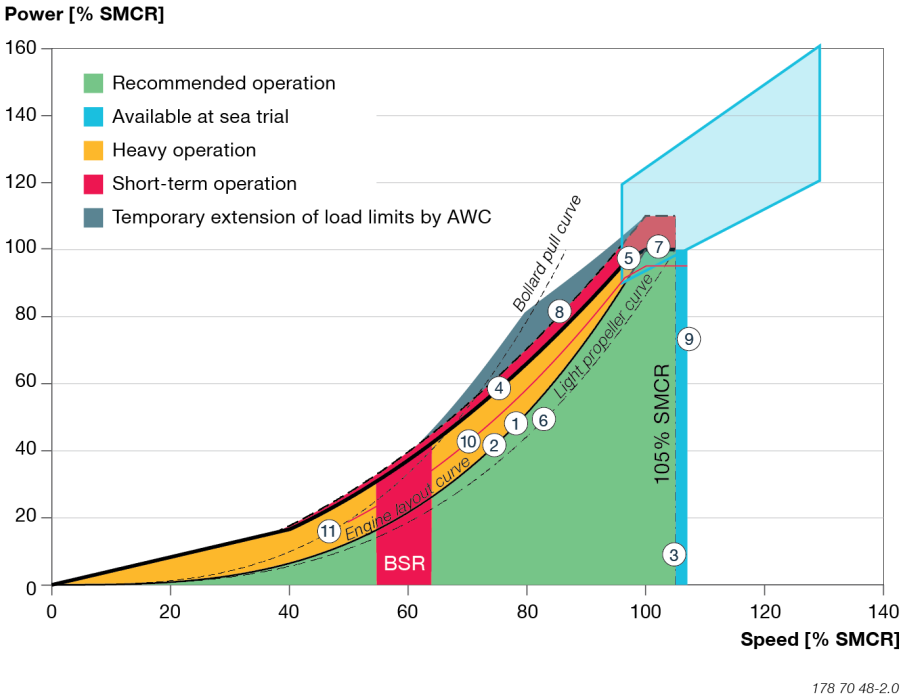

Fig. 2.03.02: Engine load diagram with adverse weather condition (AWC) function for SMCR placed within the layout diagram (light blue)

The specified MCR, point MP, of the engine corresponds to the ship specification. The service points of the installed engine incorporate the engine power required for ship propulsion, and by the shaft generator.

Operating curves and limits

The lines on Fig. 2.03.02 describe the service range of the engine. We will refer to these lines throughout section 2.03. The location of the SMCR point within the layout diagram does not affect the appearance of the load diagram. The SMCR point alone defines the load diagram, since all specifications utilise the maximum capabilities of the engine design. See the later section on “Derating for lower specific fuel oil consumption”.

Line 1:
Engine layout curve, per definition passing through 100% SMCR rpm, and 100% SMCR power. This curve coincides with the “heavy propeller curve”, line 2. An engine without PTO will typically operate to the right of this curve about 95% of the time.

Line 2:
Heavy propeller curve, the light propeller curve (line 6) shifted with the light running margin to account for heavy weather, and fouled hull.

2025-06-16 - en

Line 3:
Maximum rpm for continuous operation. For engines with an SMCR on the line L_1-L_2 in the layout diagram, up to 105% of L_1-rpm can be utilised. If the SMCR is sufficiently speed derated, 110% of SMCR rpm, but no more than 105% of L_1-rpm, can be utilised for standard engines. Torsional vibration conditions must permit the rpm values.

If the SMCR (MP) is sufficiently speed derated, and if torsional vibration conditions permit it, more than 110% speed is possible by choosing the “extended load diagram”. The extended load diagram is described later in this chapter.

Line 4:
Torque/speed limit of the engine, limited mainly by the thermal load on the engine.

Line 5:
Represents the maximum mean effective pressure (MEP) level acceptable for continuous operation. Note, that this is only a limit at high loads, and engine speeds. At lower speeds, line 4 is a stricter limit.

Line 6:
Light propeller curve for clean hull, and calm weather, often used for propeller layout. The light running margin is the rpm margin (in percent) between the engine layout curve (lines 1 and 2) and the light propeller curve.

Line 7:
Represents the maximum power for continuous operation. Note that when increasing rpm towards lines 3 and 9, the maximum power for continuous operation cannot exceed 100%.

Line 8:
The area between lines 4, 5, 7 and line 8 represents the overload operation limit of the engine. Overload running is possible only for limited periods, 1 hour out of every 12 hours, as the resulting thermal load on the engine is high.

Line 9:
Maximum acceptable rpm at sea trial conditions with clean hull and propeller in calm water. 110% of SMCR rpm, but no more than 107% of L_1-rpm if permitted by torsional vibrations.

If point M / the SMCR of the engine is sufficiently speed derated, more than 110% speed is possible by choosing “Extended load diagram” which is described later in this chapter.

Line 10:
PTO layout limit. This curve describes the maximum combined power required by the light propeller curve and the PTO at a given rpm with a shaft generator/PTO. The PTO layout limit is to be considered when dimensioning the system. This layout limit ensures operational margin to line 4, see the subsequent section “Shaft generator/PTO layout, governor stability and integration”.

Line 11:
Bollard pull propeller curve. The heaviest propeller curve possible at zero advance speed. The bollard pull curve is typically 15 to 20% heavier than the light propeller curve, values may vary for individual designs.

AWC area
Extended overload operation limits of engines equipped with the adverse weather conditions function, the AWC function. The AWC function increases the percentage of engine power that can be developed with a heavy propeller, as long as required in an emergency.

2025-06-16 - en

When the function is activated, the electronic control of the ME engine alters the cyclic process of the combustion to reduce the negative effects of developing a high engine torque at low rpm. It is done at the cost of an increased specific fuel oil consumption. Due to the resulting SFOC increase, AWC is not to be considered a replacement for an adequate light running margin. See the later section “AWC function” for a further description of this function.

Limits for low-speed running

As the fuel injection for ME engines is automatically controlled over the entire power range, the engine is able to operate down to approximately 15-20% of the nominal L_1 speed, depending on the actual propulsion system. Absolute values of minimum speed must be determined at the sea trial.

Recommendation for operation

The area between lines 1, 3 and 7 is available for continuous operation without limitation.

The area between lines 1, 4 and 5 is available for operation in shallow waters, in heavy weather, and during acceleration, that is for non-steady operation without any strict time limitation.

The area between lines 4, 5, 7 and 8 is available for overload operation for 1 out of every 12 hours.

After some time in operation, the ship’s hull and propeller will be fouled, resulting in heavier running of the propeller. The propeller curve will move to the left, (from line 6), towards line 2, and extra power is required for propulsion to keep the same ship speed.

In calm weather conditions, the extent of heavy running of the propeller can indicate the need for cleaning the hull, and/or polishing the propeller.

2025-06-16 - en

Passage of a barred speed range

If the engine and shaft line has a barred speed range (BSR), it is usually a class requirement that it can be passed quickly. The quickest way to pass the BSR is the following:

1. Set the rpm setting to a value just below the BSR
2. Wait while the ship accelerates to a ship speed corresponding to the rpm setting
3. Increase the rpm setting to a value above the BSR.

Sometimes, for example in certain manoeuvring situations inside a harbour, or at sea in adverse conditions, it may not be possible to follow the procedure for passing the BSR. Either because there is no time to wait for the ship speed to build up, or because high ship resistance makes it impossible to achieve a ship speed corresponding to the engine rpm setting. In such cases, it can be necessary to pass the BSR at low ship speed.

The most basic guidance on avoiding slow passing of the BSR is to avoid a BSR that extends higher than 60% engine rpm, while specifying a light running margin within the recommendation. If so, it is normally possible to achieve a sufficiently quick passage of the BSR in relevant conditions.

A more detailed approach is to ensure a BSR power margin, BSR_{PM}, of at least 10% in the design.

$BSR_{PM} = ((P_L - P_P)/P_P*100$

Here, P_P is the power required by the bollard pull propeller curve at the upper end of the BSR, whereas P_L is the power limit for continuous operation within the engine load diagram, line 4 in Fig. 2.03.02. As such, the BSR_{PM} expresses the excess engine power in the upper range of the BSR, and hereby the ship's capability to pass it.

If a ship faces challenges with passing the BSR, a special function termed the "dynamic limiter function" (DLF) may be specified for diesel cycle engines. The DLF can for shorter periods increase the index limits of the engine, and ensure a faster passage of the BSR.

For 5- and 6- cylinder engines with short shaft lines, such as on many bulkers and tankers, the BSR may extend high up in the rpm range. Special attention must be given to ensure that the BSR can be passed quickly. 5- and 6- cylinder engines are as standard delivered with the DLF functionality.

For support regarding passage of the BSR, contact Everllence, Copenhagen at MarineProjectEngineering2s@everllence.com.

2025-06-16 - en

Shaft generator/PTO layout, governor stability, interface, and integration

For the dimensioning and layout of a two-stroke propulsion plant with power take-off (PTO)/shaft generator, two aspects are important to consider for the design:

- **PTO layout limit:** prevention of engine overload
- **Governor stability evaluation:** prevention of engine speed hunting, and potentially also engine overspeed

Both aspects and their interactions will be clarified in detail in the following sections. See the flowchart in Fig. 2.03.03 for an overview of the considerations needed for a specific plant.

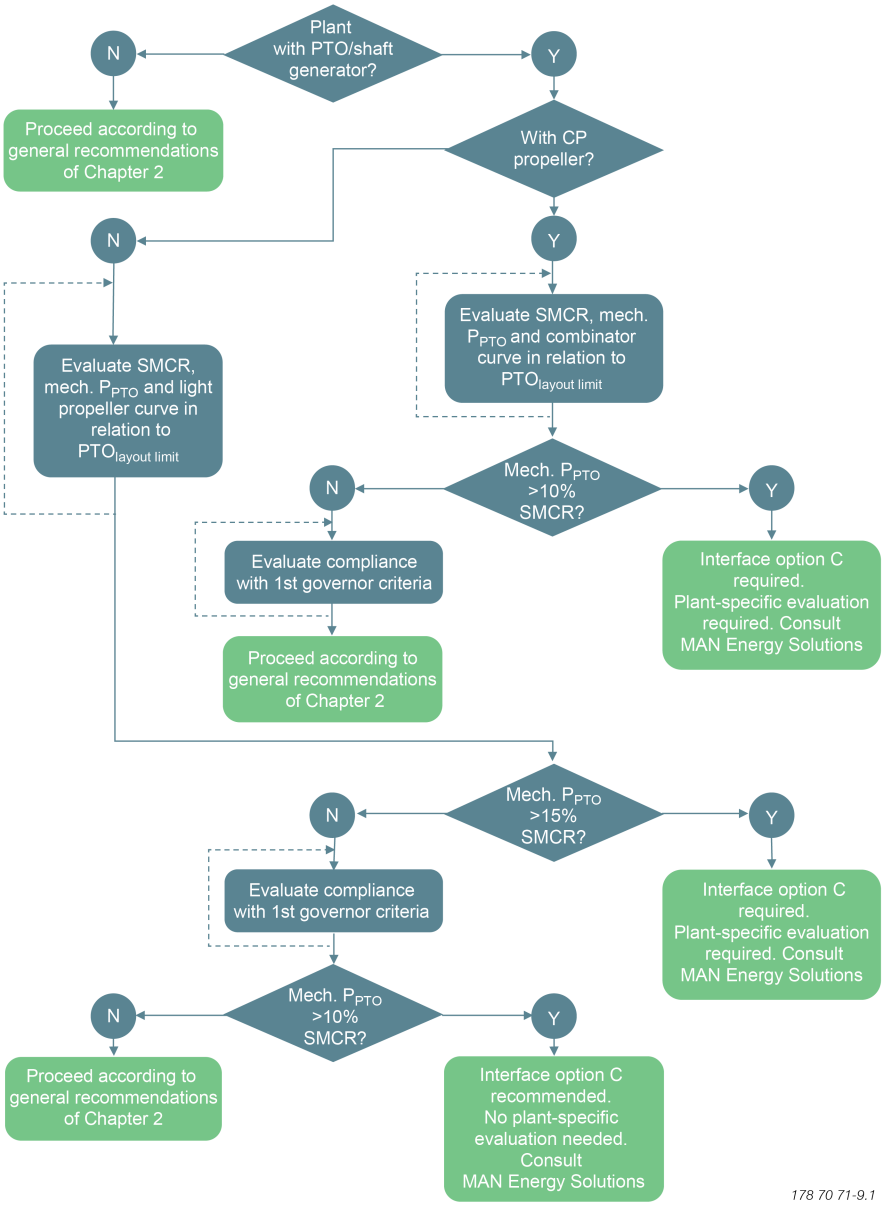

Fig. 2.03.03: Flowchart for determining evaluations needed, depending on plant characteristics

2025-06-16 - en

It is a prerequisite for a successful governor stability evaluation that the criteria of the PTO layout limit is fulfilled, and conversely. It is important to consider both aspects as illustrated by the flowchart. At the end of this section, considerations for the protection of the engine towards overload in service is given.

PTO layout limit

In the load diagram in Fig. 2.03.02, line 10 represents the "$PTO_{layout\ limit}$". Line 10 describes the maximum combined power required by the light propeller curve and the PTO at a given speed, *n*, when a shaft generator/PTO is installed. The minimum value of the following three equations governs the "$PTO_{layout\ limit}$". Observe the speed interval for which the second equation is applicable:

$$\mathrm{PTO}_{\mathrm{layout\ \ limit}} = \begin{cases} P_{SMCR} \times \left(\frac{n}{n_{SMCR}}\right)^{2.4}, & \text{for } n \in 50\% \text{ to } 96.2\% \text{ of } SMCR \\ P_{SMCR} \times 0.95 \times \left(\frac{n}{n_{SMCR}}\right), & \text{for } n \in 96.2\% \text{ to } 100\% \text{ of } SMCR \\ P_{SMCR} \times 0.95, & \text{for } n > 100\% \text{ of } SMCR \end{cases}$$

As marked in Fig. 2.03.02, the maximum design PTO power at a given speed is the vertical difference between line 6 (the light propeller/combinator curve of a propeller) and line 10 (the $PTO_{layout\ limit}$). PTO operation is not possible below 50% of SMCR-speed. Table 2.03.01 shows the relative PTO power available when sea conditions allow operation along the light propeller curve. At engine speeds above 50% of SMCR, the relative PTO power is given as a function of the light running margin.

Designing the combined power of the PTO and propeller according to the $PTO_{layout\ limit}$ ensures that the PTO can be operated in conditions less ideal than sea trial conditions. Note that neither the torque/speed limit (line 4) nor the MEP limit (line 5) is used for the layout of the PTO capacity.
With increased heavy running, the electric power taken off with the PTO must be decreased gradually not to push the operational point outside the engine limits. In severe cases, fouling and sea conditions alone are enough to shift the propeller curve to line 4. It these cases, the PTO cannot be utilised without overloading the engine, and the auxiliary engines must deliver all the electric energy.

It can be beneficial to increase the SMCR power and/or the light running margin for ships with a large electrical consumption, which often operate at high speeds/engine loads, or in areas with frequent encounters of adverse weather conditions. This will increase the margin from the light propeller curve to the $PTO_{layout\ limit}$ and ensure a higher availability of the PTO.

Increasing the SMCR power of the engine, while maintaining a constant propeller pitch, results in an increase of the light running margin. See Table 2.03.01 at the end of this section. When evaluating the possibility for an increase of SMCR power, compliance with EEDI regulations must be considered. See the application examples in main section “Examples of the use of load diagrams”.

For information on PTO power available at a given propeller speed as a function of the propeller light running margin, see the later section "PTO layout table".

2025-06-16 - en

Governor stability for plants with PTO

A PTO connected to the electric grid will deliver constant power, and introduce negative damping of the engine speed. If a vessel encounters, for example, large waves, the speed through water and the engine speed will drop. Therefore, the frequency drive will load the PTO with a higher torque to deliver the same electrical power. The torque increase enhances the speed drop experienced, and conversely for a speed increase.
To ensure a stable engine speed during operation, Everllence has established guidelines on governor stability for the maximum PTO power allowed.
These guidelines must be considered along with the PTO layout limit. It means that the maximum allowable PTO power to design for at any engine speed is determined as the minimum of the two aspects.

First governor stability criteria

The first governor stability criteria depicted on Fig. 2.03.04 represents a minimum with respect to governor stability at lower speeds. The criteria are valid for plants where the mechanical power of the PTO does not exceed 15% SMCR power for fixed pitch propeller (FPP) plants and 10% SMCR power for controllable pitch propeller (CPP) plants.

Fig. 2.03.04 shows three limits, which establish the first governor stability criteria for:

- FPP plants (blue solid curve)
- CPP plants, and engines with bore sizes smaller than 80 cm (orange solid curve)
- CPP, and 80-bore engines or larger (grey solid curve)

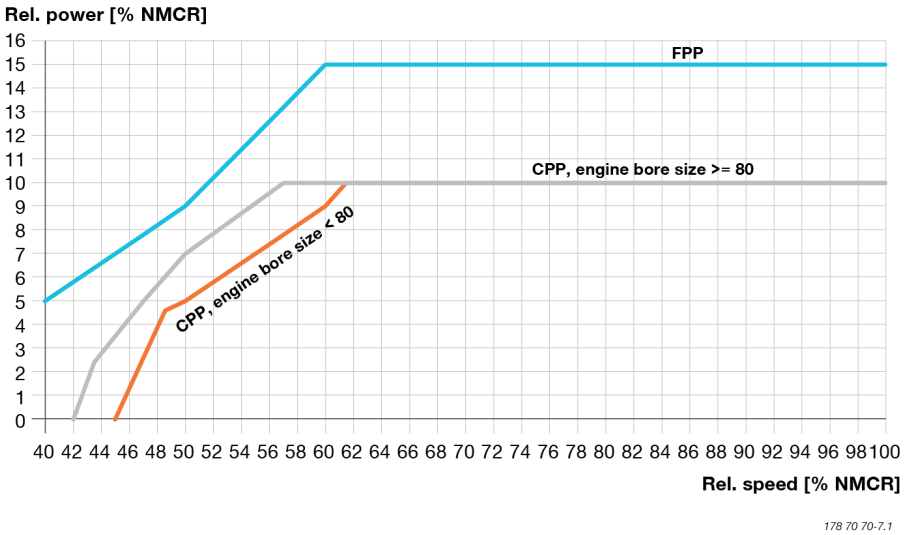

Fig. 2.03.04: First governor stability criteria for maximum mechanical PTO which ensure an acceptable governor performance and stability without interface option C. The limits relate to NMCR and are independent of the choice of SMCR

2025-06-16 - en

FPP		CPP < 80		CPP >= 80	
[%NMCR]	[%NMCR]	[%NMCR]	[%NMCR]	[%NMCR]	[%NMCR]
100	15.0	100.0	10.0	100.0	10.0
60	15.0	61.5	10.0	60.0	10.0
57	13.2	60.0	9.0	57.0	10.0
50	9.0	57.0	7.8	50.0	7.0
47	7.8	50.0	5.0	47.0	5.0
40	5.0	48.6	4.6	45.0	3.5
		47.0	2.6	43.5	2.4
		45.0	0.0	42.0	0.0

Table 2.03.01: First governor stability criteria for maximum mechanical PTO ensuring acceptable governor performance and stability without interface option C. The limits relate to NMCR and FPP plants, CPP plants and engines with bore sizes smaller than 80 cm, and CPP plants with 80-bore engines or larger

The limits in Fig. 2.03.04 are based on NMCR power and speed, not SMCR power and speed. This is because stability is related closely to the actual speed and the physical parameters of the engine, i.e., power and inertia, rather than the choice of SMCR.

Everllence must be consulted for a plant-specific PTO layout and design evaluation, if the maximum mechanical PTO load on the shaft is higher than:

- 15% of SMCR power for FPP plants,
- or 10% for CPP plants,
- or if the plant does not fulfil the first governor stability criteria.

Interface option C described in the next section is mandatory for these plants.

For FPP plants, where the mechanical PTO power exceeds 10% of SMCR power, Interface option C is recommended.

PTO operation is in any case not possible below 50% of SMCR speed.

Interfaces for PTO and PTI – integration of power management and engine control

There is an interface between the power management system (PMS) and the main engine control system (ECS) with the purpose to:

- ensure the best utilisation of the PTO
- prevent power blackout
- protect the engine against overload.

A standard handshake interface is offered, and if a trip of the PTO can cause a power blackout (i.e., the PTO is an essential power supply), it is a requirement. If the PTO cannot cause a power blackout, the standard interface without handshake can be used as an alternative.

2025-06-16 - en

The interface with handshake has the three configuration options shortly described as Option A, B, and C:

Option A: With a signal indicating if PTO is allowed or not

Option B: For PTOs with a speed dependent maximum power output

This interface option includes an advanced engine speed-holding function to ensure that a minimum engine speed is kept corresponding to the current PTO power. This is to prevent blackout when the PTO is the sole provider of power. If Option B is not selected, the engine speed-holding function will use a constant minimum engine speed (independent of the current PTO power).

Option C: For PTOs with a large output relative to the main engine power, see further information in the next section.

It is possible to enable more configuration options for the same engine, for example, A+B or A+B+C. For further reading, refer to the separate interface specification between ECS and PMS.

For PTOs with the option to also act as PTI, it is a requirement that the interface is used for both PTO and PTI operation.

PTO interface option C

For plants with a shaft generator more powerful than ordinary, Interface option C can be installed between the engine control system (ECS) and the power management system (PMS) to increase the maximum PTO power. This interface improves the integration of ECS and PMS, and enhances governor stability. A plant-specific evaluation is performed for each application of interface option C. See also the next sections for other benefits of Interface option C.

The plant-specific PTO layout and design evaluation may lead to changes in the control equipment. For example, an increase of signals from the plant and requirements to the design of engine-driven mechanical components in the form of turning and tuning wheels. The evaluation may also lead to changes in the use of the PTO or set restrictions for the rotational speed while taking out maximum power.

Fixed pitch propellers
For plants with FPP, interface option C is:

- Required if the mechanical power of the PTO exceeds 15% of SMCR
- Recommended if the mechanical power of the PTO exceeds 10% of SMCR

Application of Interface option C requires consultation of Everllence for a plant-specific PTO layout and design evaluation. By applying Interface option C, at least 20% of SMCR power is available for PTO within certain speed limitations. An even larger ratio may be available for PTO and can be investigated as part of a plant-specific PTO layout and design evaluation.

Controllable pitch propellers
For plants with CPP, further considerations are necessary regarding governor stability, as when the propeller pitch is reduced. For CPP plants, Interface option C is:

- Required if the mechanical power of the PTO exceeds 10% of SMCR.
- Recommended if the mechanical power of the PTO exceeds 5% of SMCR

2025-06-16 - en

Based on a plant-specific evaluation, specific limits may be set to the minimum engine speed at which manoeuvring can be performed while sustaining the maximum PTO power.

For plants, where the mechanical PTO power exceeds 10% of SMCR, a plant-specific evaluation includes the risk of overspeed if a total electric load loss occurs on the PTO during engine operation in constant speed mode.

Load sharing and overload protection in service

Designing according to the PTO layout limit does not protect the engine from overload during PTO operation in combination with a fouled hull, or an encounter of heavy seas. With the standard interfaces between the engine and remote control, it is the responsibility of the crew to balance the load between PTO and gensets to avoid overload of the engine during conditions with increased hull resistance.

Besides ensuring governor stability, interface option C provides signals for the PMS to automate load sharing between the main engine PTO and gensets. The extended interface will help ensuring higher utilisation rates of the PTO, thus reducing genset running hours. If supplying power solely by the PTO, it will also reduce the risk of blackout without overloading the engine.

For support regarding layout of PTO/PTI and plant-specific evaluations, contact Everllence, Copenhagen at MarineProjectEngineering2s@everllence.com.

2025-06-16 - en

Options for accounting for PTO in the EEDI

Two options exist for including a PTO in the vessel EEDI, as described in the EEDI guideline MEPC.364(79) and the IACS procedure PR38:

In option 1, the power of the main engine, PME, used for calculating the EEDI is determined as:

$P_{ME} = 0.75 \times (P_{SMCR} - P_{PTO})$, with the limitation that $0.75 \times P_{PTO} \leq P_{AE}$.

Here, P_{PTO} is the nameplate PTO power and P_{AE} is the auxiliary power calculated as a percentage of P_{SMCR}. For the alternative option 2, the power available for propulsion is limited to: $P_{LIM,\ propulsion} = P_{SMCR} - P_{PTO}$, and P_{ME} used in the EEDI calculation is $0.75 \times P_{LIM,\ propulsion}$, see Fig. 2.03.05.

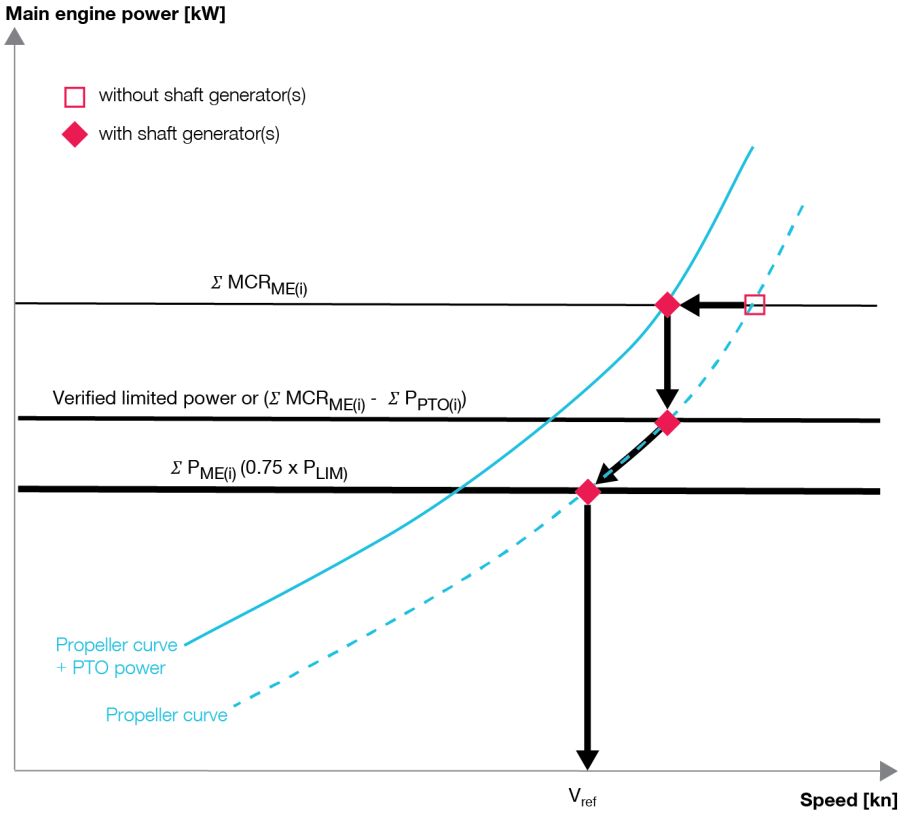

178 71 11-6.0

Fig. 2.03.05: The principle of PTO option 2 for the EEDI calculation

With an extension to PTO interface option C, it is possible for the engine control system (ECS) to support PTO option 2 in the EEDI calculation. The support of PTO option 2 is only performed by the ECS, and for a plant with PTO interface option C, no further cabling or functionalities are necessary in the power management system (PMS).

2025-06-16 - en

The PMS sends the actual mechanical power of the PTO ($P_{PTO, actual}$) to the ECS. The ECS ensures that the actual total engine power ($P_{LIM, engine}$) in service is limited to the fixed limit for propulsion power ($P_{LIM, propulsion}$) plus the actual PTO power ($P_{PTO, actual}$):

$$P_{LIM, engine} = P_{LIM, propulsion} + P_{PTO, actual}$$

The value of the power limitation for maximum propulsion power ($P_{LIM, propulsion}$) is fixed and can in no circumstances be lifted or modified. When the PMS informs the ECS that PTO operation is needed, and this is acknowledged by the ECS, an engagement offset of approx. 5% of P_{SMCR} is added to the actual $P_{LIM, engine}$ to allow load transfer to the PTO. As long as the PTO is engaged, the engagement offset is added to the $P_{LIM, engine}$ to allow load fluctuations for the PTO. The combined power output of the engine, $P_{PTO, actual}$ and $P_{LIM, propulsion}$, is logged continuously. Since the engine can deliver the full P_{SMCR}, when full PTO power is exploited, the engine is certified as usual in accordance with P_{SMCR}. Furthermore, the SFOC of the engine is not affected by the application of PTO option 2 for EEDI, and auxiliary capacities cannot be reduced as the engine remains able to develop 100% power.

The engine load diagram in Fig. 2.03.06 is based on an SMCR with a fixed limitation for propulsion power determined as: $P_{LIM, propulsion} = P_{SMCR} - P_{PTO}$. In an actual example of the PTO power in service ($P_{PTO, actual}$), a variable limitation is used for the total engine power: ($P_{LIM, engine} = P_{LIM, propulsion} + P_{PTO, actual}$), thereby ensuring that the fixed limitation for propulsion power ($P_{LIM, propulsion}$) is not exceeded.

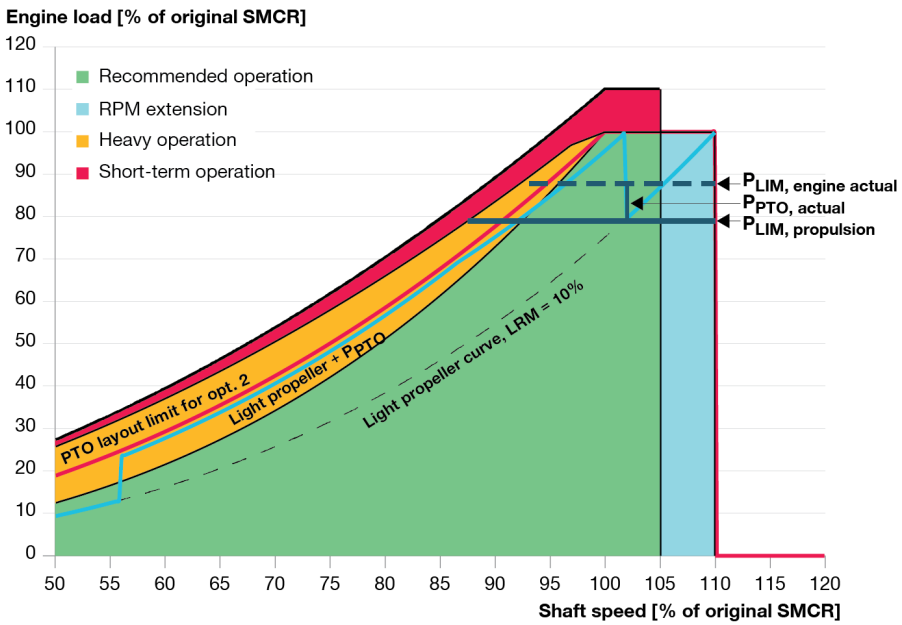

178 71 12-8.0

Fig. 2.03.06: Example of an engine load diagram based on an SMCR with a fixed limitation for propulsion power

Recommendations for designing propulsion plants for PTO option 2 for EEDI

The PTO layout guidance for this application deviates from Everllence standard PTO layout guidance as described previously in Chapter 2: The propulsion and PTO power in total is to be designed for 100% of P_{SMCR}, and not the maximum 95% of P_{SMCR} recommended for standard PTO layouts.

The difference between the guidelines is reflected in the PTO layout limit for option 2 in Fig. 2.03.06, where N_{rel} is the speed relative to the speed at SMCR (N_{SMCR}):

PTO layout limit for option 2 = 100 x $(N_{rel}/100)^{2.4}$

The special PTO layout limit for option 2 is necessary since it is not possible to exploit the 5% power margin of the standard guideline for heavy running of the propeller, because the propulsion power will be limited to $P_{LIM, propulsion}$ regardless of whether the propeller is heavy running or not.

Instead, the higher power allowed under the EEDI by applying PTO option 2 for plants with high PTO power capacities provides an inherent service margin for PTO power.

The limitations for PTO power relative to P_{SMCR}, as described previously in section 2.03 of the Project Guide, prevail irrespective of the use of PTO option 2 for EEDI. It means that for fixed pitch propeller plants, a PTO power of up to 15% of P_{SMCR} is possible without plant-specific evaluations, and up to 10% of P_{SMCR} for controllable pitch propellers.

If the amount of resistance added to the propeller makes it so heavy running that the limited propulsion power ($P_{LIM, propulsion}$) is encountered at a shaft speed below SMCR (N_{SMCR}), the engine cannot be loaded to 100% P_{SMCR}. In this case, the combined propulsion and PTO power will be subject to the limits for continuous operation of the engine.

It is recommended to have a speed margin in the design for heavy running of the propeller. The propeller light running margin can be increased to a level where $P_{LIM, propulsion}$, along the light propeller curve, and P_{PTO} combined is reached at speeds above N_{SMCR}. Such a margin is included in the light propeller curve for the example in Fig. 2.03.06, where $P_{LIM, propulsion}$, along the light propeller curve, + P_{PTO} attains 100% engine load at 102% speed.

The engine cannot necessarily attain 100% engine load in light sea trial condition as a result of the combined propulsion and PTO power. This will be the case if the maximum allowable speed along the light propeller curve regarding engine or torsional vibration conditions is below the speed at which $P_{LIM, propulsion}$ is reached.

It is recommended to design the propeller and intermediate shaft to the full torque of P_{SMCR}. If a winding failure occurs on the PTO, or similar, which results in a total load loss for the PTO, the shafting can instantaneously experience the full engine torque before the fuel index can be regulated to correspond to $P_{LIM, propulsion}$. The shafting system cannot be designed as for an engine with an SMCR corresponding to $P_{LIM, propulsion}$ due to the higher torque available from the higher power installed.

For examples on the application of PTO option 2 for EEDI, see the concluding examples in the latter part of this section. For support regarding layout of PTO/PTI, classification and application of PTO option 2 for EEDI, contact MarineProjectEngineering2s@everllence.com

2025-06-16 - en

AWC functionality

The AWC functionality is only available for single fuel diesel engines equipped with high-efficiency turbochargers. The AWC function is introduced for ME-C 10.5 and 9.7 engines. If the AWC function is installed, it can be activated by pushing the “Increase limitation”-button, found on all ME-C engines.

There is no limitation on the duration of engine operation in the area of the AWC function. As such, the increased power produced may be utilised when evaluating a ship designs compliance with IMO minimum propulsion power requirements.

Ice-classed ships are designed to operate in ice, and ice operation is therefore not an emergency running condition. The AWC functionality is therefore not applicable for compliance with ice-class power requirements, or similar requirements that the ship is designed for (not emergency). For ice-classed ships, the standard, or if selected, the rpm-extended load diagram, should be applied as usual.

Based on the same argument as for ice-classed ships, the AWC functionality does not increase the power available for PTO. The reason is that the operation of a PTO is not an emergency running condition. A PTO installation must still comply with the PTO layout limits, and the governor stability criteria.

As a countermeasure to the temperature increase from heavy running, the AWC functionality alters the cyclic process of the combustion by changing the fuel injection timing and the exhaust valve timing. This improves thermal conditions in the combustion chamber at a cost of an increased SFOC. The SFOC penalty depends on the specific load conditions. Due to the increased SFOC, the AWC functionality should not be considered a replacement for an adequate light running margin.

When the engine is not running heavier than the normal load diagram, the AWC functionality has no effect and does not affect the SFOC or emissions.

For ships frequently operating in adverse weather conditions, an increased light running margin combined with an extended load diagram will ensure a lower SFOC during (such) encounters of adverse weather than the AWC function. See the later section about extended load diagrams. For specific enquiries towards the availability of the AWC functionality, contact MarineProjectEngineering2s@everllence.com. For specific projects applying AWC, send the torsional vibration calculation (TVC) to Everllence, Copenhagen at RD-CPH@everllence.com.

2025-06-16 - en

Rpm-extended load diagram

When a ship with fixed pitch propeller operates in normal sea service, it will in general operate around the design/light propeller curve (line 6) as shown on the standard load diagram in Fig. 2.03.07.

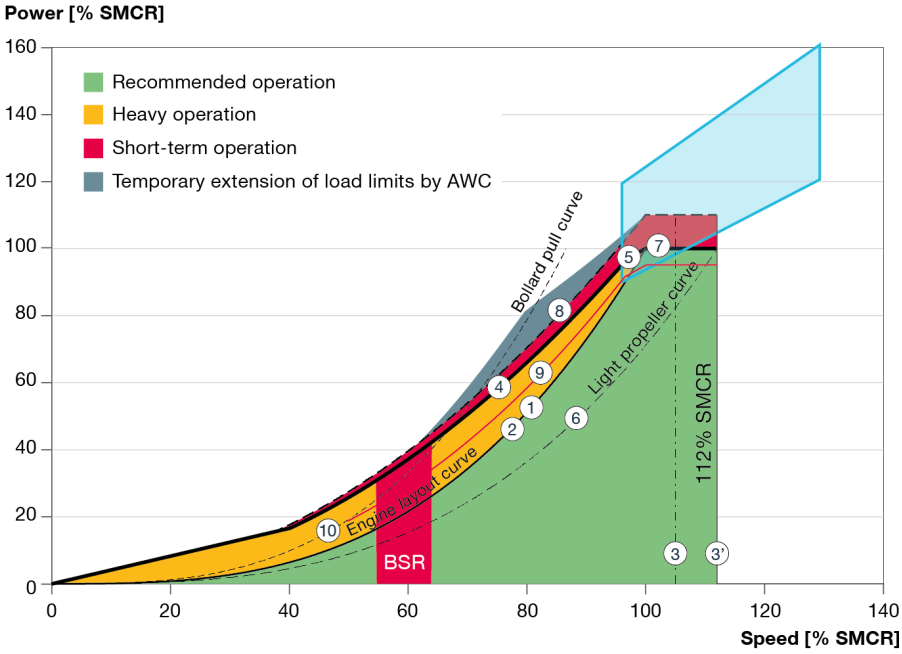

178 70 83-9.0

Fig. 2.03.07: Rpm-extended load diagram for a speed derated engine with an extreme increase of the light running margin

Sometimes, when operating in heavy weather or ice, the performance of the fixed pitch propeller will be characterised as more heavy running. For equal power absorption of the propeller, the propeller speed will be lower, and the propeller curve will move to the left.

As the low-speed main engines are directly coupled to the propeller, the engine has to follow a fixed pitch propeller also in heavy running propeller situations. For this type of operation, there is normally enough margin in the load area between line 6 and the normal torque/speed limitation, line 4. It requires that the light running margin is within recommendations, see Fig. 2.03.02.

For some ships and operating conditions, it would be an advantage – when occasionally needed – to have a maximum margin for the torque increase from the light propeller curve (line 6) to the torque/speed limit (line 4).

If the vessel has a fixed pitch propeller which requires a high light running margin, an rpm-extended load diagram is relevant. Torsional vibration conditions must permit this, and the classification society in question must approve the solution.

The high light running margin, and rpm-extended load diagram is especially relevant when at least two of the listed cases apply to the ship:

- Sailing in areas with frequent encounters of heavy weather, especially for low-powered ships with blunt bows
- Sailing for long periods in shallow or otherwise restricted waters

2025-06-16 - en

- A high ice class
- Two fixed pitch propellers/two main engines, where one propeller/one engine is declutched/stopped for some reason
- Large electric loads and according to PTO capacity.

See the examples in the following section about application of the rpm-extended load diagram.

Combinator curves for CPP propulsion plants

In principle, a controllable pitch propeller (CPP) can load the engine in any point within the load diagram. It means that the engine can operate along a combinator curve with optimised pitch settings and propeller speed, making it possible to operate the total propulsion system with optimum efficiency.

There are three modes for operating a ship with a CPP, as reflected in Fig. 2.03.08:

- Constant engine speed (generator mode) – red line
- Fixed combinator curve – black curve (6)
- Adaptive combinator curve - this mode continuously adapts/controls pitch and rpm, typically based on a combinator curve

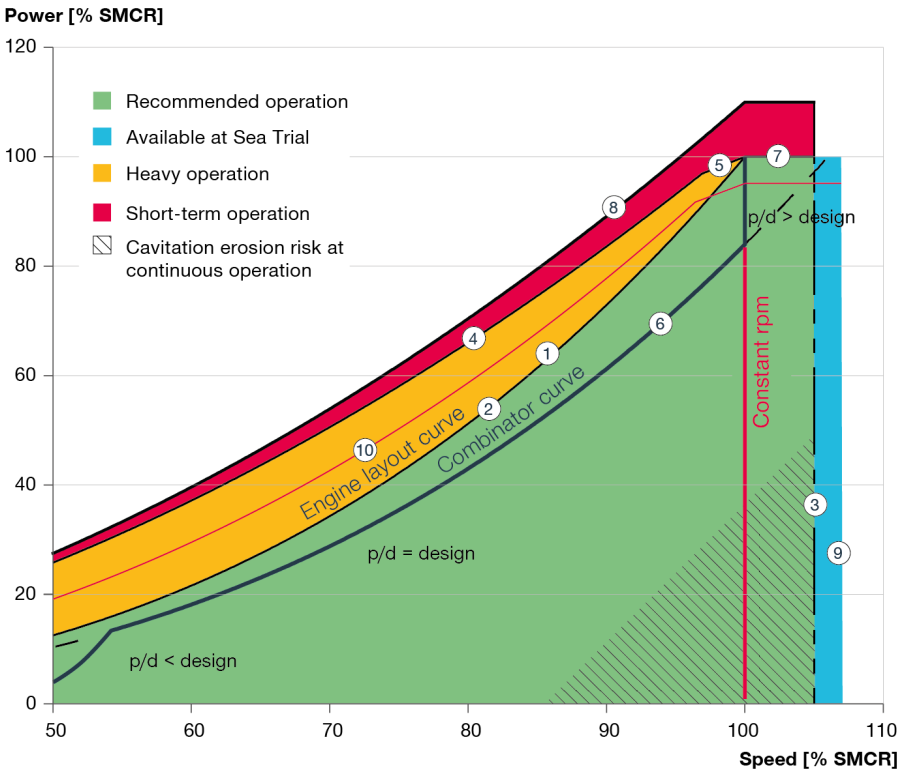

Fig. 2.03.08: Combinator curve and engine load diagram. The constant rpm curve can also be referred to as the generator curve. The exact speed of the generator curve will depend on the gear ratio of the PTO

Recommendations will be given regarding:

- Two-stroke engines coupled directly with a CPP without PTO

2025-06-16 - en

- Additional recommendation for two-stroke engines coupled directly with a CPP and PTO

Controllable pitch propeller operating without PTO

Constant engine speed mode

For plants without PTO, the constant speed mode is typically used for, but not limited to, manoeuvring as the ship approaches port. Operating the engine at high speed and low pitch ensures the maximum margin to the load limitations of the engine and the fastest response to any load change.

It is recommended avoiding continuous operation in the low-load area of the engine and at high propeller speed close to SMCR speed, due to:

- Potential risk of erosive pressure side cavitation
- Relatively higher losses of propeller and engine

Fixed combinator curve

A fixed combinator curve implies that the engine operates at a certain speed and the CPP load controller sets an associated pitch, depending on the setting of the machinery telegraph. When operating along a combinator curve, the shaft speed is reduced at lower loads. This will reduce the losses of the propeller and the engine at lower loads and increase the propulsion plant efficiency.

Fig. 2.03.09 shows a typical fixed combinator curve, which consists of two constant speed parts and one combinator part

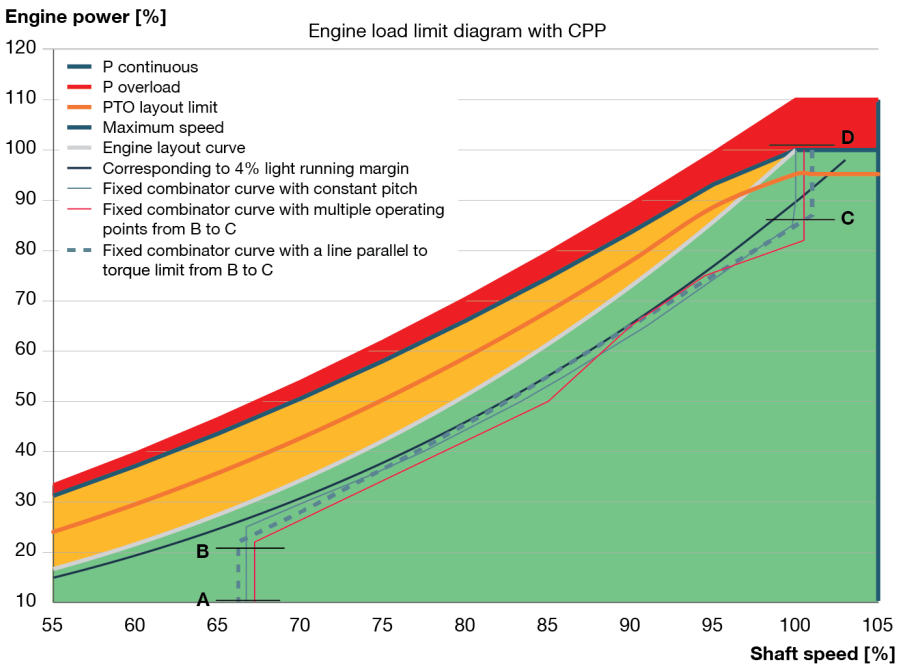

178 70 74-40

Fig. 2.03.09: Typical fixed combinator curves for controllable pitch propellers without PTO

2025-06-16 - en

The minimum constant speed part (point A to B) is typically placed after the upper end of a barred speed range (BSR), if any. The maximum constant speed part (point C to D) with an increased pitch is typically laid out as the SMCR speed, so only the pitch is increased to attain 100% load. However, up to 105% of the SMCR speed is available, as for an engine connected to a fixed pitch propeller (FPP).

The combinator part (point B to C), is the part of the combinator curve that connects the constant speed parts. Usually, the propeller design point is within the range of the combinator part. The pitch can be constant along this part, or it can follow a preset combination of speeds and different pitch settings.

During the encounter of heavy weather, or fouling of the hull, the response from a fixed combinator curve is similar to that of an FPP propeller curve.

The torque required from the propeller increases when the resistance of the hull increases, which leads to a heavier running engine and higher SFOC. The result is higher thermal loading of the engine. To achieve an adequate margin, it is recommended that any arbitrary point along the fixed combinator curve follows the recommendation of the FPP light running margin (LRM). This margin is 4–7%, and in special cases up to 10%, except for the typical increase of pitch at SMCR speed to reach maximum engine power.

When reaching the engine limits for continuous operation, the propeller pitch must be reduced, if the engine speed is not to be reduced.

Adaptive combinator curve

Typically, adaptive or dynamic combinator curves are based on fixed combinator curves, and they can be applied to vessels experiencing resistance variations.

For long-term operation of plants with an adaptive combinator curve/propeller pitch, it is recommended loading the engine no heavier than the engine layout curve (line 1 or 2).

Short-term loading of the engine beyond the engine layout curve and up to the limits of continuous operation (line 4) is available for acceleration, peak wave resistance, etc., without adjusting the pitch. When reaching the limit for continuous operation, the pitch must be reduced to maintain the engine speed.

The pitch adjustment capabilities of a CPP together with the adaptive combinator curve enable an operating curve where the engine is not operated heavier than given by the engine layout curve. Furthermore, the benefits are that the SFOC does not increase as a result of engine heavy running, and that the thermal load of the engine is reduced.

2025-06-16 - en

Controllable pitch propeller operating with PTO

Constant engine speed mode (generator mode)

A constant engine speed is mainly relevant when operating a synchronous PTO connected to a grid without a frequency converter, or for manoeuvring.

For plants with a PTO exceeding 10% of the SMCR power, the margin towards engine overspeed during a total loss of shaft generator load at zero or low pitch should be considered. See the section on governor stability, and for further information contact MarineProjectEngineering2S@everllence.com.

Fixed combinator curve

For CPP propulsion plants with PTO and a fixed combinator curve, it is recommended designing the combinator curve so that the combined load of propulsion power and maximum PTO output is within the PTO layout limit (line 10 in Fig. 2.03.08) at any speed.

For any combinator curve, the margin between the propulsion power design points and the PTO layout limit should be large enough to cover the maximum PTO mechanical power within the PTO layout limit at any speed. See Fig. 2.03.10.

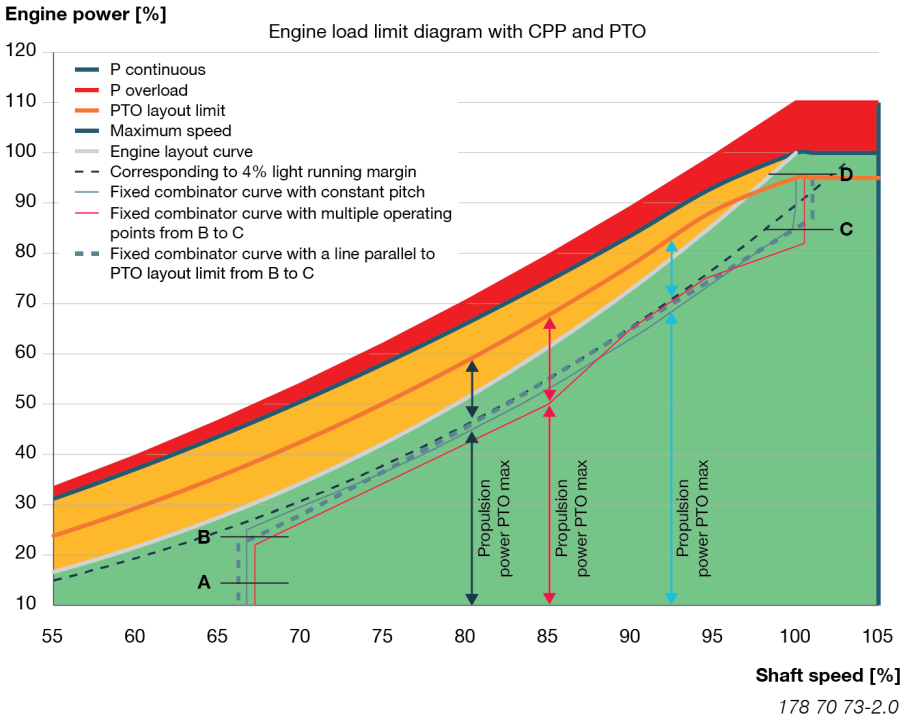

Fig. 2.03.10: Typical fixed combinator curve for controllable pitch propellers with PTO

Although the power of the intended PTO is within the PTO layout limit for a combinator curve heavier than 4% LRM, the recommendation of a combinator curve corresponding to at least 4% LRM prevails, for any point on the combinator curve. Some CPP plants have a PTO capacity larger than required at sea because the main engine driven PTO supplies power to the thrusters during manoeuvring. In such cases, the maximum PTO power required at sea

can be considered the margin between the combinator curve and the PTO layout limit (line 10). However, the general recommendation of 4–7% LRM, up to 10% in special cases, prevails.

Adaptive combinator curve

Assuming that the full PTO capacity at a given speed is not utilised for plants with an adaptive combinator curve/propeller pitch. In this case, it is recommended not to operate with a combined load of propeller and PTO, which is heavier than the engine layout curve (line 1, 2 in Fig. 2.03.08).

Short-term loading of the engine beyond the layout curve and up to the limits of continuous operation (line 4) is available for acceleration, start of heavy electric consumers, etc., without adjusting the pitch.

The dynamic capabilities of the CP propeller can reduce the level of heavy running by reducing the propeller torque to counter a torque increase of driving a PTO. This will reduce the SFOC not only for the power taken out for the grid, but also for the power used to propel the vessel.

2025-06-16 - en

Examples of the use of load diagrams

In the following, various examples illustrate the flexibility of the layout and load diagrams.

Example 1: Engine coupled to FPP without PTO

In this example, which represents a typical application of marine two-stroke engines, typical values of 7%, engine margin, and 15% sea margin are included. A light running margin in the higher range of the recommended 4–7% (up to 10% in special cases) is displayed for the sake of the example.

The maximum speed acceptable for an engine with a standard load diagram is the minimum value of 110% SMCR-speed or 105% L_1-speed. If torsional vibration conditions permit it, 107% of the SMCR-speed will be available for continuous operation, even if the light propeller curve extends beyond the layout diagram, see Fig. 2.03.11.

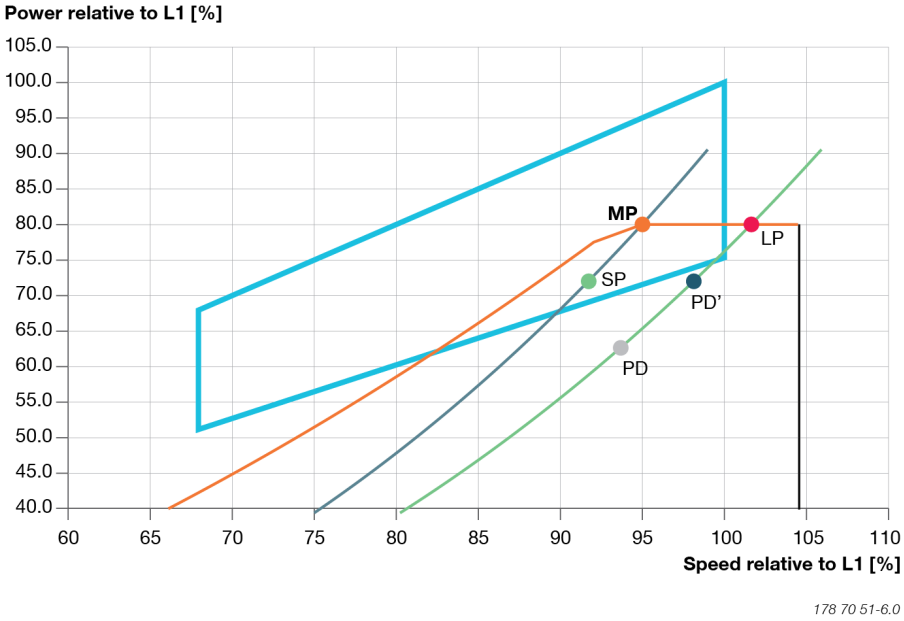

Fig. 2.03.11: Engine coupled to a fixed pitch propeller without shaft generator. The load diagram is the result of selecting the MP/SMCR within the layout area, 15% sea margin, 10% engine margin, and 7% light running margin.

2025-06-16 - en

Example 2: Engine coupled to FPP with PTO

In this example, the SMCR is determined by using the regular method for determining PD and adding margins. Thereafter, it is investigated whether the desired PTO of 9% of the SMCR can be accommodated within the PTO layout limit.

As seen on Fig. 2.03.12, the power of the light propeller curve plus the power of the PTO lies well within the PTO layout limit (line 10 in Fig. 2.03.08), which is up to 102% of the SMCR speed (96% relative to L_1 on Fig. 2.03.12). At a shaft speed above this, the PTO output must be reduced.

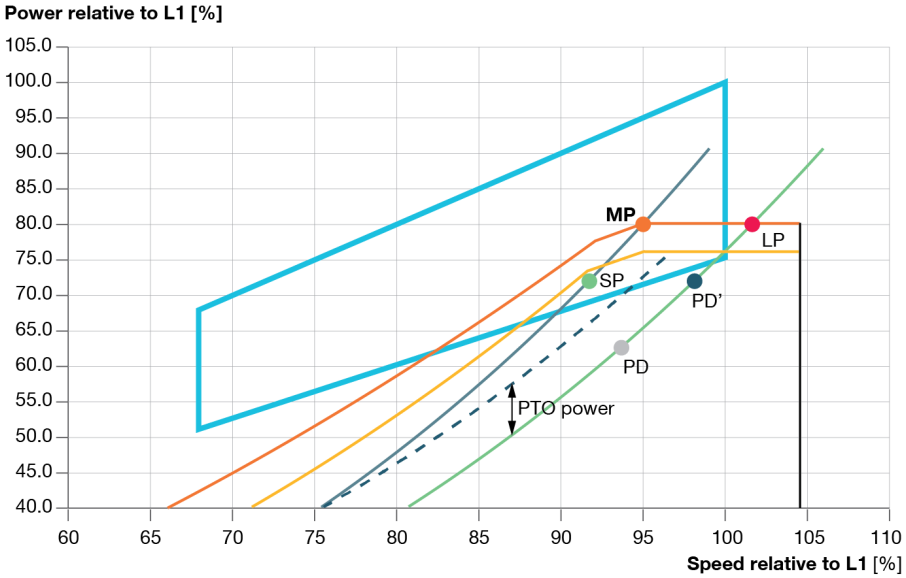

178 70 52-8.0

Fig. 2.03.12: Engine coupled to a fixed pitch propeller, and shaft generator. The load diagram is the result of selecting the MP/SMCR within the layout area, the PTO layout limit, and light propeller curve plus PTO power (dashed).

Since the PTO power is less than 10% of the SMCR power, only first governor stability criteria should be considered. There is no need for further considerations about the impact of the PTO towards governor stability. As an example of evaluating according to the first governor stability criteria, consider a 6S60ME-C10 engine and:

- NMCR (L1) of 14,940 kW at 105 rpm (80% of L1 as on Fig. 2.03.12)
- SMCR of 11,950 kW at 99.8 rpm (95% of L1 as on Fig. 2.03.12).

For a mechanical PTO power of:

- 9% of SMCR, which corresponds to: 0.09 x 11,905 = 1,070 kW
- available in a speed range from 80 - 102% of SMCR
  which is: 80% x 95% = 76% to 102% x 95% = 97% of NMCR.

Absolute		**Relative to SMCR**		**Relative to NMCR**	
Speed [rpm]	Power [kW]	Speed [%]	Power [%]	Speed [%]	Power [%]
101.8	1070	102	9.0	97	7.2
79.8	1070	80	9.0	76	7.2
59.9	800	60	6.7	57	5.4

Table 2.03.02: Values of PTO realtive to an SMCR of 11950 kW at 99.8 rpm relative to NMCR of 14940 kW at 105 rpm.

This is plotted relative to the first governor stability criteria, as this PTO power represents 7.2% of the power at NMCR. The PTO is available down to 60% of SMCR speed, and it delivers a constant torque between 60% and 80% of SMCR speed. It means that the PTO delivers a reduced power proportional to the speed reduction, compared to the speed at which the nominal PTO power is available: 60%/80% x 1070 = 800 kW. This corresponds to 5.4% of NMCR power and 60% x 95% = 57% of the NMCR speed. This is depicted in Fig. 2.3.13.

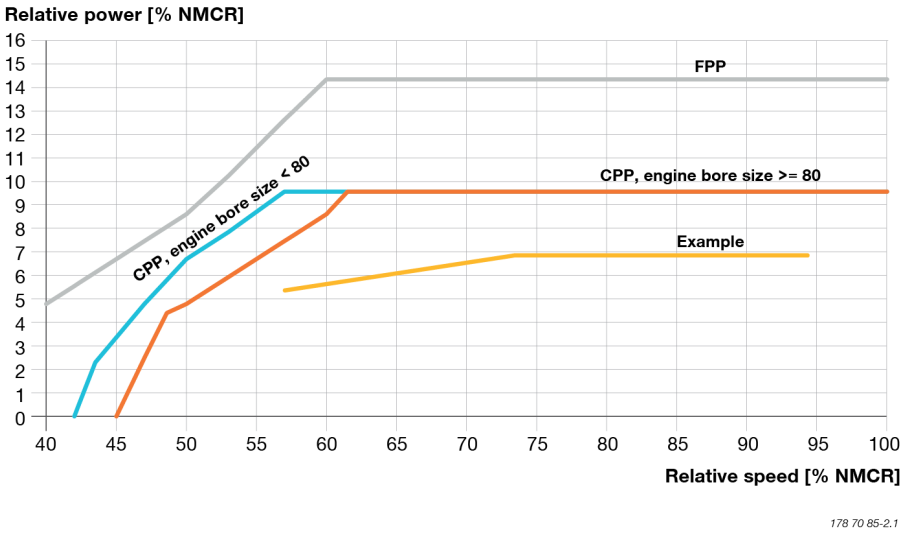

Fig. 2.03.13: First governor stability criteria for maximum mechanical PTO and PTO power in the example with an 6S60ME-C10, see table 2.

Example 3: Engine coupled to FPP with PTO, and increased light running margin

In this example, a PTO of 18% of the SMCR is desired, which represents a larger percentage of the SMCR power than considered in example 2.

To accommodate the larger PTO in a desired range of 80–100% of the SMCR-speed (75–95% on Fig. 2.03.14), the light running margin is increased to 9%. For the present SMCR located at 95% of the L_1-speed, a 9% light running margin is still within the limit given by the minimum value of 110% SMCR-speed, or 105% L_1-speed.

As the PTO power exceeds 15% of the SMCR power, interface option C between the power management system and the engine control system is a prerequisite for applying the PTO to ensure sufficient governor stability. A plant specific evaluation of the governor stability is part of the application of interface option C.

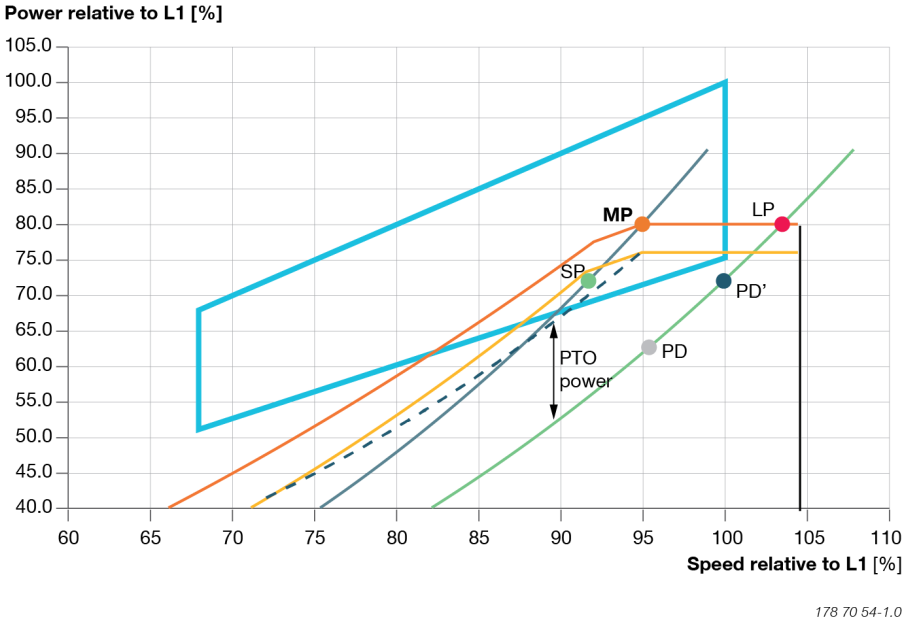

Fig. 2.03.14: Engine coupled to a fixed pitch propeller and shaft generator. The load diagram is the result of selecting the MP/SMCR within the layout area, the PTO layout limit (line 10), and the light propeller curve plus the PTO power (dashed).

Example 4: Engine coupled to FPP with PTO, increased SMCR power, and rpm-extended load diagram

In this case, an increase of the PTO power to 24% of the SMCR power is considered. If considering the same absolute propeller curve as in example 3, the power cannot be accommodated within the PTO layout limit. For the sake of example, it is not desirable to increase the propeller light running margin further by decreasing the propeller pitch since it affects the propeller efficiency negatively.

To accommodate the higher power of the PTO, the SMCR power is increased by 7% while the SMCR-speed is maintained. This results in an engine that delivers a higher torque, see Fig. 2.03.15. The SMCR increase has the consequence that the propeller light running margin at 100% of SMCR power now corresponds to 11.5% - without changing the propeller pitch.

2025-06-16 - en

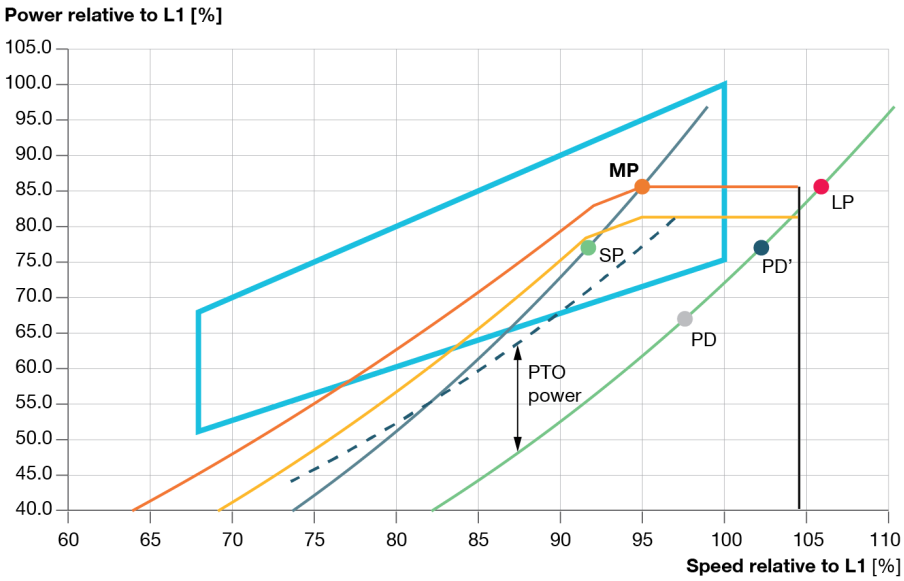

178 70 55-3.0

Fig. 2.03.15: Engine coupled to a fixed pitch propeller, and a very large shaft generator of 24% of SMCR. The load diagram is the result of selecting the MP/SMCR within the layout area, the PTO layout limit (line 10), and the light propeller curve plus the PTO power (dashed line).

In this example, the light propeller curve will deliver 100% power at 111.5% of SMCR speed, or 106% of L_1-speed. This is beyond the criteria of the minimum value of 110% of SMCR-speed, or 105% of L_1-speed.

For speed-derated engines, it is possible to extend the maximum speed limit to maximum 105% of the engine's L_1/L_2 speed (line 3 in Fig. 2.03.08), but only if the torsional vibration conditions permit this. Thus, with respect to torsional vibrations, the shafting has to be approved by the classification society in question, based on the selected extended maximum speed limit.

When choosing an increased light running margin, the load diagram area may be extended from line 3 to line 3', as shown in Fig. 2.03.07.

The increased light propeller curve (line 6), may have a correspondingly increased light running margin before exceeding the torque/speed limit (line 4).

In this example, the rpm extension of the load diagram will have limited effect. Relative to the SMCR, 105% of L_1-speed corresponds to 110.5%. Thereby, 100% power will not be available for continuous operation only by loading the engine with the propeller and with the hull as in sea trial condition.

For further speed-derated engines, the effects of the rpm-extended load diagram will be greater.

As for sea trial, 107% of L_1-speed is available for demonstrating full power, if torsional vibration conditions permits, see Fig. 2.03.02. In this example, it corresponds to 112.5% of the SMCR. If 100% power is to be available only for propeller load for continuous operation, the SMCR must be further speed derated, that is, the SMCR point will be moved further to the left in the layout diagram in Fig. 2.03.15.

2025-06-16 - en

As the PTO power exceeds 15% of the SMCR power, interface option C between the power management system and the engine control system is a prerequisite for applying the PTO to ensure sufficient governor stability. A plant specific evaluation of the governor stability is part of the application of interface option C.

Example 5: Engine coupled to CPP without PTO

If a controllable pitch propeller (CPP) is applied, the combinator curve (of the propeller) will normally be selected for a loaded ship including sea margin. For a given propeller speed, the combinator curve may have a given propeller pitch, and it may be heavy running in heavy weather like for a fixed pitch propeller.

Therefore, it is recommended using a light running combinator curve observing the recommendations for the light running margin for a fixed pitch propeller. For plants equipped with dynamic combinator curves adapting the propeller pitch continuously, it is recommended to seeking an operational point corresponding to the recommendations for the light running margin for fixed pitch propellers.

See Fig. 2.03.16 for a typical combinator curve corresponding to 5% light running margin along the constant pitch part of the combinator curve. Even without a PTO, some combinator curves are designed not to exceed 100% of the SMCR-speed, as represented by the dashed line. The engine does not prevent the combinator curve from continuing at constant pitch beyond 100% of the SMCR-speed. However, the general speed limits of the engine must be observed and torsional vibration conditions must permit it.

Sea and engine margins can in general be considered the same as for FP propellers. However, as the pitch can be reduced in an encounter of adverse weather conditions, there are no reasons for applying the AWC functionality.

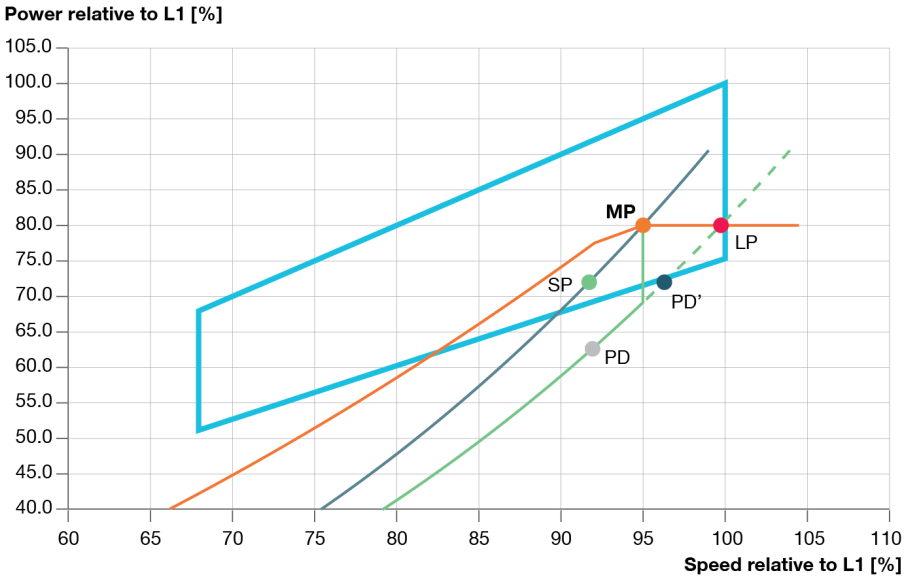

178 70 56-5.0

Fig. 2.03.16: Engine coupled to a controllable pitch propeller without shaft generator. The load diagram is the result of selecting the MP/SMCR within the layout area.

2025-06-16 - en

Example 6: Engine coupled to CPP with PTO

In this example, a PTO of 15% of the SMCR is desired which requires a combinator curve corresponding to 7% light running margin to accommodate the PTO within the PTO layout limit, see Fig. 2.03.17.

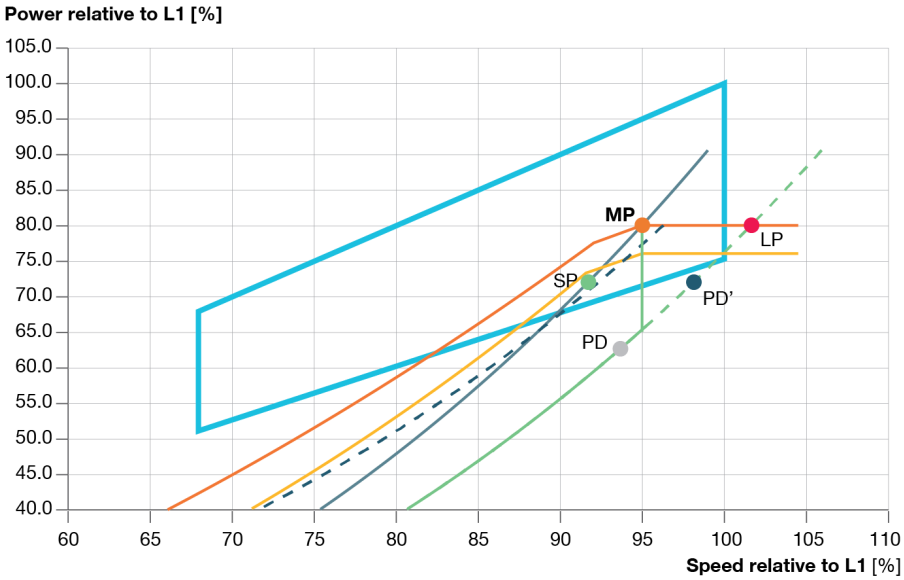

Fig. 2.03.17: Engine coupled to a controllable pitch propeller with a shaft generator corresponding to 15% of the SMCR power. The load diagram is the result of selecting the MP/SMCR within the layout area.

As for a fixed pitch propeller, the combined load of the combinator curve and PTO power must lie within the PTO layout limit.

Even if the pitch of the CP propeller can be reduced to accommodate the PTO, when full PTO power is needed, it may be an advantage to increase the SMCR power as in example 4, if high ratios of PTO power are to be available. Especially if full utilisation of the PTO power is foreseen for the major part of the operational time.

As the PTO power exceeds 10% of the SMCR power, interface option C between the power management system and the engine control system is a prerequisite for applying the PTO to ensure sufficient governor stability for a CPP plant. A plant-specific evaluation of the governor stability is part of the application of interface option C. For CPP plants, this evaluation also considers the margin against overspeed if a total load loss takes place on the PTO, while the propeller is at zero pitch. This scenario can take place during manoeuvring if the PTO drives the thrusters.

Contact Marine Project Engineering2S@everllence.com for enquires and assistance with the layout of the engine.

2025-06-16 - en

Example 7: Utilisation of PTO option 2 for EEDI on an LPG carrier

The following two examples consider the application and impact of applying PTO option 2 for EEDI. Consider an LPG carrier with a 6G60ME-C10.5-LGIP engine with:

- SMCR of 11,200 kW at 90 rpm
- 10% propeller light running margin
- PTO with 2,070 kWe power
- Considering a 90% efficiency, this results in: P_{PTO} = 2,300 kW mechanic load.

This example covers the basics of what is shown in the previous Fig. 2.03.06.

The SMCR of 11,200 kW and P_{PTO} = 2,300 kW implies that:

$P_{LIM, propulsion} = P_{SMCR} - P_{PTO}$ = 11,200 - 2,300 = 8,900 kW

Whereby, P_{ME} used in the EEDI calculation is:

$P_{ME, opt. 2} = 0.75 \times P_{LIM, propulsion}$ = 6,675 kW

This can be compared to the value attained by applying option 1:

$P_{ME, opt. 1} = 0.75 \times (P_{SMCR} - P_{PTO})$

↕

$P_{ME, opt. 1} = 0.75 \times (P_{SMCR} - P_{AE} / 0.75)$ = 0.75 x (11,200 - 530 / 0.75) = 7,870 kW

Example 8: Utilisation of PTO option 2 for EEDI on a Kamsarmax (82k dwt) bulk carrier

Consider a Kamsarmax bulk carrier with a 6S60ME-C10.5 engine with:

- SMCR in L4 of 9,000 kW at 84 rpm
- 7% propeller light running margin
- PTO with 900 kWe power, a replacement for one of the typically three auxiliary engines
- Considering a 90% efficiency, this results in P_{PTO} = 1,000 kW mechanic load.

The SMCR of 9,000 kW and P_{PTO} = 1,000 kW imply that:

$P_{LIM, propulsion} = P_{SMCR} - P_{PTO}$ = 9,000 - 1,000 = 8,000 kW

$P_{ME, opt. 2} = 0.75 \times P_{LIM, propulsion}$ = 6,000 kW

2025-06-16 - en

This can be compared to the value attained by applying option 1:

$P_{ME, opt. 1} = 0.75 \times (P_{SMCR} - P_{PTO})$

↕

$P_{ME, opt. 1} = 0.75 \times (P_{SMCR} - P_{AE} / 0.75) = 0.75 \times (9{,}000 - 450 / 0.75) = 6{,}300$ kW

If the vessel had to attain the same EEDI as per PTO option 2 for EEDI without the PTO, the SMCR of the engine should be approx. 8,000 kW. However, this rating would imply a change of engine selection to a 5S60ME-C10.5 with SMCR of 8,000 kW at 84 rpm.

Fig. 2.03.18 shows the difference between limitations for continuous loading for these two different ratings, when applying the same absolute propeller with a light running margin of 7% to the original SMCR.

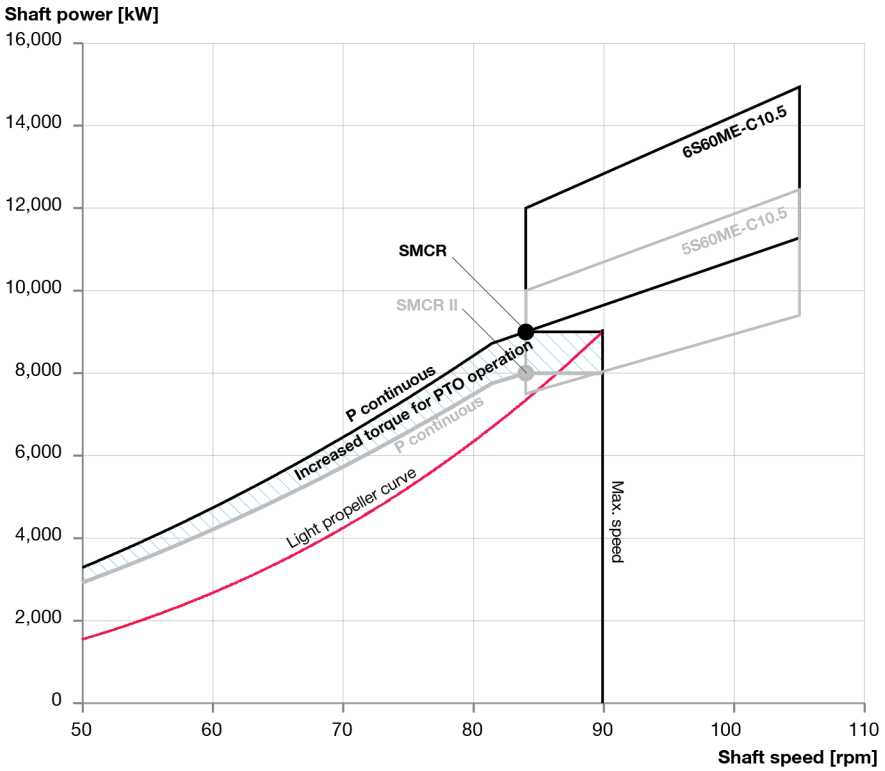

Fig. 2.03.18: Difference in limits for continuous loading of engines with an SMCR of 9,000 kW at 84 rpm relative to an SMCR of 8,000 kW at 84 rpm. By applying PTO option 2 for EEDI for the high SMCR, it is possible to attain the same EEDI value as for the low SMCR without PTO.

Furthermore, it illustrates that by applying PTO option 2 for EEDI, it is possible to apply an engine with a higher rating than otherwise applicable. This would enable a higher torque for the same EEDI value as without PTO, thereby ensuring that there is a good margin for operation of the PTO in calm waters and less ideal conditions alike. This allows for a high utilisation rate of the PTO in service to the benefit of the overall plant efficiency. In this specific example, the derating extent for the 6S60ME-C10.5 engine is furthermore greater than for the 5S60ME-C10.5 engine, resulting in a lower SFOC.

2025-06-16 - en

PTO layout table

Maximum (mechanical) PTO power [% of SMCR power] as a function of engine speed and propeller light running margin							
Engine speed [% of SMCR]	Propeller light running margin [%]						
	4%	5%	6%	7%	8%	9%	10%
50%	7.8	8.1	8.5	8.7	9.0	9.3	9.6
51%	8.1	8.4	8.7	9.0	9.3	9.6	9.9
52%	8.3	8.7	9.0	9.3	9.7	10.0	10.3
53%	8.6	8.9	9.3	9.6	10.0	10.3	10.6
54%	8.8	9.2	9.6	9.9	10.3	10.6	11.0
55%	9.0	9.4	9.8	10.2	10.6	11.0	11.3
56%	9.3	9.7	10.1	10.5	10.9	11.3	11.7
57%	9.5	10.0	10.4	10.8	11.2	11.6	12.0
58%	9.7	10.2	10.7	11.1	11.6	12.0	12.4
59%	9.9	10.4	10.9	11.4	11.9	12.3	12.8
60%	10.1	10.7	11.2	11.7	12.2	12.7	13.1
61%	10.4	10.9	11.5	12.0	12.5	13.0	13.5
62%	10.6	11.2	11.7	12.3	12.8	13.3	13.8
63%	10.8	11.4	12.0	12.6	13.1	13.7	14.2
64%	11.0	11.6	12.3	12.9	13.5	14.0	14.6
65%	11.1	11.8	12.5	13.1	13.8	14.4	14.9
66%	11.3	12.1	12.8	13.4	14.1	14.7	15.3
67%	11.5	12.3	13.0	13.7	14.4	15.0	15.6
68%	11.7	12.5	13.2	14.0	14.7	15.3	16.0
69%	11.8	12.7	13.5	14.2	15.0	15.7	16.4
70%	12.0	12.9	13.7	14.5	15.3	16.0	16.7
71%	12.1	13.0	13.9	14.7	15.5	16.3	17.1
72%	12.3	13.2	14.1	15.0	15.8	16.6	17.4
73%	12.4	13.4	14.3	15.2	16.1	16.9	17.8
74%	12.5	13.5	14.5	15.5	16.4	17.3	18.1
75%	12.6	13.7	14.7	15.7	16.6	17.6	18.4
76%	12.7	13.8	14.9	15.9	16.9	17.9	18.8
77%	12.8	14.0	15.1	16.1	17.2	18.2	19.1
78%	12.9	14.1	15.2	16.3	17.4	18.4	19.4
79%	13.0	14.2	15.4	16.5	17.7	18.7	19.8

2025-06-16 - en

Maximum (mechanical) PTO power [% of SMCR power] as a function of engine speed and propeller light running margin							
80%	13.0	14.3	15.5	16.7	17.9	19.0	20.1
81%	13.1	14.4	15.7	16.9	18.1	19.3	20.4
82%	13.1	14.5	15.8	17.1	18.3	19.5	20.7
83%	13.1	14.5	15.9	17.3	18.6	19.8	21.0
84%	13.1	14.6	16.0	17.4	18.8	20.0	21.3
85%	13.1	14.7	16.1	17.6	19.0	20.3	21.6
86%	13.1	14.7	16.2	17.7	19.1	20.5	21.8
87%	13.0	14.7	16.3	17.8	19.3	20.7	22.1
88%	13.0	14.7	16.4	18.0	19.5	21.0	22.4
89%	12.9	14.7	16.4	18.1	19.6	21.2	22.6
90%	12.8	14.7	16.4	18.1	19.8	21.4	22.9
91%	12.8	14.6	16.5	18.2	19.9	21.6	23.1
92%	12.6	14.6	16.5	18.3	20.0	21.7	23.4
93%	12.5	14.5	16.5	18.4	20.2	21.9	23.6
94%	12.4	14.5	16.5	18.4	20.3	22.1	23.8
95%	12.2	14.4	16.4	18.4	20.4	22.2	24.0
96%	12.0	14.2	16.4	18.4	20.4	22.3	24.2
97%	11.0	13.3	15.5	17.6	19.7	21.7	23.6
98%	9.4	11.8	14.1	16.3	18.4	20.4	22.4
99%	7.8	10.2	12.6	14.8	17.0	19.1	21.2
100%	6.1	8.6	11.0	13.4	15.6	17.8	19.9
101%	3.4	6.0	8.5	10.9	13.2	15.4	17.6
102%	0.7	3.3	5.9	8.4	10.8	13.1	15.3
103%	0.0	0.6	3.3	5.8	8.3	10.6	12.9
104%	0.0	0.0	0.6	3.2	5.7	8.1	10.5
105%	0.0	0.0	0.0	0.5	3.1	5.6	8.0
106%	0.0	0.0	0.0	0.0	0.5	3.0	5.5
107%	0.0	0.0	0.0	0.0	0.0	0.4	3.0
108%	0.0	0.0	0.0	0.0	0.0	0.0	0.4
109%	0.0	0.0	0.0	0.0	0.0	0.0	0.0
110%	0.0	0.0	0.0	0.0	0.0	0.0	0.0

Table 2.03.03: Maximum (mechanical) PTO power (a percentage of SMCR power) as a function of engine speed, and propeller light running margin

2025-06-16 - en

This page is intentionally left blank

2025-06-16 - en

Load diagram for an actual project

This section is not applicable

2023-01-18 - en

This page is intentionally left blank

2023-01-18 - en

SFOC guarantee conditions

The specific fuel oil consumption (SFOC) is given in g/kWh based on the reference ambient conditions stated in ISO 3046-1:2002(E) and ISO 15550:2016(E):

- 1,000 mbar ambient air pressure
- 25°C ambient air temperature
- 25°C scavenge air cooling water temperature.

The SFOC is based on fuels with lower calorific values (LCV) as specified in Table 2.05.01.

Fuel type (Engine type)	LCV [kj/kg]
Diesel	42,700
Methane (GI)	50,000
Ethane (GIE)	47,500
Methanol (LGIM)	19,900
LPG (LGIP)	46,000

178 69 17-6.0.0

Table 2.05.01: Lower calorific values of fuels

For ambient conditions that are different from the ISO reference conditions, the SFOC will be adjusted according to the conversion factors in Table 2.05.02.

		With P_{max} adjusted	Without P_{max} adjusted
Parameter	Condition change	SFOC change	SFOC change
Scav. air cooling water temperature	per 10°C rise	+0.60%	+0.41%
Blower inlet temperature	per 10°C rise	+0.20%	+0.71%
Blower inlet pressure	per 10 mbar rise	-0.02%	-0.05%
Fuel, lower calorific value	per 1%	-1.00%	-1.00%

178 69 18-8.0.0

Table 2.05.02: Specific fuel oil consumption conversion factors

A 1°C increase of the scavenge air cooling water temperature, results in a corresponding 1°C increase of the scavenge air temperature, and if P_{max} is unchanged SFOC increases 0.06%.

2026-06-01 - en

SFOC guarantee

The SFOC guarantee refers to the above ISO reference conditions, the lower calorific values, and is valid for one running point only.

The energy efficiency design index (EEDI) has increased the focus on partload SFOC. We therefore offer the option of selecting the SFOC guarantee at a load point in the range between 50% and 100%.

All engine design criteria, for example heat load, bearing load and mechanical stresses on the construction, are defined at 100% load, independent of the guarantee point selected. This means that turbocharger matching, engine adjustment and engine load calibration must also be performed at 100% load, independent of the guarantee point. At 100% load, the tolerances are compensated for by matching, adjustment and calibration, the SFOC tolerance is 5%.

When choosing an SFOC guarantee below 100%, the tolerances will affect engine running at the lower SFOC guarantee load point. This includes tolerances on measurement equipment, engine process control, and turbocharger performance.

Consequently, the SFOC guarantee depends on the selected guarantee point, and it s given with a tolerance of:

Engine load (% of SMCR)	SFOC tolerance
100 - 85%	5%
<85 - 65%	6%
<65 - 50%	7%

Table 2.05.03: SFOC tolerance depending on engine load

Please note that the SFOC guarantee can only be given in one (1) load point.

2026-06-01 - en

Cooling water temperature during normal operation

In general, it is recommended to operate the main engine with the lowest possible cooling water temperature to the air coolers, as this will reduce the fuel consumption of the engine and improve the engine performance.

When operating with 36°C cooling water temperature setpoint instead of, for example, 10°C (to the air coolers), the SFOC will increase by approx. 2 g/kWh.

With a lower cooling water temperature, the air cooler and water mist catcher will remove more water from the compressed scavenge air. This has a positive effect on the cylinder condition as the humidity level in the combustion gasses is lowered, and the tendency to condensation of acids on the cylinder liner is thereby reduced.

Derating for lower specific fuel oil consumption

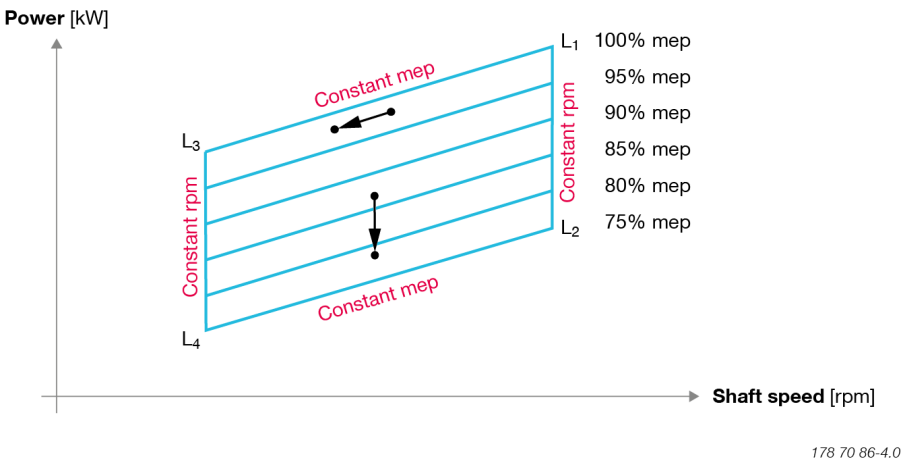

Fig. 2.05.01: Layout diagram showing MEP derating along L1-L2 (reduced SFOC) and power and speed derating along L1-L3 (SFOC is unchanged)

The ratio between the maximum firing pressure (P_{max}) and the mean effective pressure (MEP) is influences the efficiency of a combustion engine. If the P_{max}/MEP ratio is increased, the SFOC will be reduced.

The engine is designed to withstand a certain P_{max} and this P_{max} is utilised by the engine control system when other constraints do not apply.

The maximum MEP can be chosen in a range of values defined by the layout diagram of the engine, and it is therefore possible to specify a reduced MEP to achieve a reduced SFOC. This concept is known as MEP derating or simply derating, see Fig. 2.05.01.

If the layout point is moved parallel to the constant MEP lines, SFOC is not reduced, see Fig. 2.05.01.

2026-06-01 - en

Engine choices when derating

Due to requirements to ship speed and possibly shaft generator power output, derating is often not achieved by reducing MCR power. Instead, if allowed under the EEDI, a larger engine is selected to be able to choose a lower MEP rating, for example an engine of the same type but with an extra cylinder.

Derating reduces the overall SFOC level. The actual SFOC for a project will also depend on other parameters such as:

- Engine tuning method
- Engine running mode (Tier II, Tier III)
- Operating curve (fixed pitch propeller, controllable pitch propeller)
- Actual engine load
- Ambient conditions.

The actual SFOC for an engine can be found using the CEAS application available at https://www.everllence.com/marine/products/planning-tools-and-downloads/ceas-engine-calculations/

It is possible to use CEAS to investigate the effect of derating for a particular engine by running CEAS for different engine ratings, for example the L_1 rating (not MEP derated) and the L_2 rating (fully MEP derated). This information can be used in the initial design work where the basic layout of the propulsion plant is decided.

Example of SFOC curves

Fig. 2.05.02 shows examples of SFOC curves for high-load tuning, part-load (EGB-PL) and low-load (EGB-LL) exhaust gas bypass tuning for a tier II engine operating with a fixed pitch propeller.

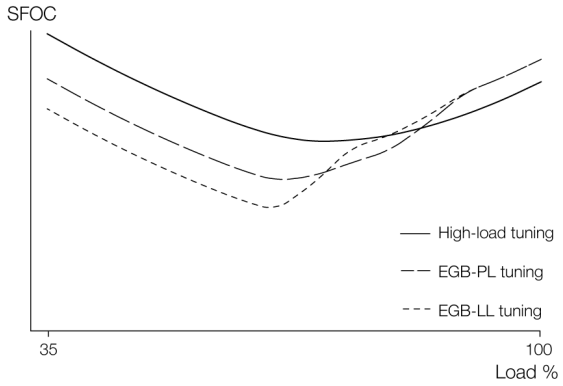

178 69 22-3.0.0

Fig. 2.05.02: Influence on SFOC from engine tuning method and actual engine load

As an example, Fig. 2.05.02 illustrates the relative changes in SFOC due to the engine tuning method and the engine load. The graphs in this figure are only examples. Use CEAS to get actual project values.

Tier III engines do not offer the option for load tuning while in tier II mode, as the parameters controlling the combustion process are already fixed in order to meet both Tier II and Tier III demands.

2026-06-01 - en

Fuel consumption in an arbitrary operating point

Once the specified MCR (M) of the engine has been chosen, the specific fuel oil consumption in an arbitrary point S_1, S_2 or S_3, can be estimated based on the SFOC in points '1' and '2'. See Fig. 2.06.01.

The SFOC values in points '1' and '2' can be found by using our CEAS application, for the propeller curve I and for the constant speed curve II, giving the SFOC in points 1 and 2, respectively. See section 20.02.

Next the SFOC for point S_1 can be calculated as an interpolation between the SFOC in points '1' and '2', and for point S_3 as an extrapolation.

The SFOC curve through points S_2, on the left of point 1, is symmetric with respect to point 1. It means that at speeds lower than that of point 1, the SFOC will also increase.

The above-mentioned method provides only an approximate value. A more precise indication of the expected SFOC at any load can be calculated. This is a service which is available to our customers on request. Contact Everllence, Copenhagen at MarineProjectEngineering2S@everllence.com.

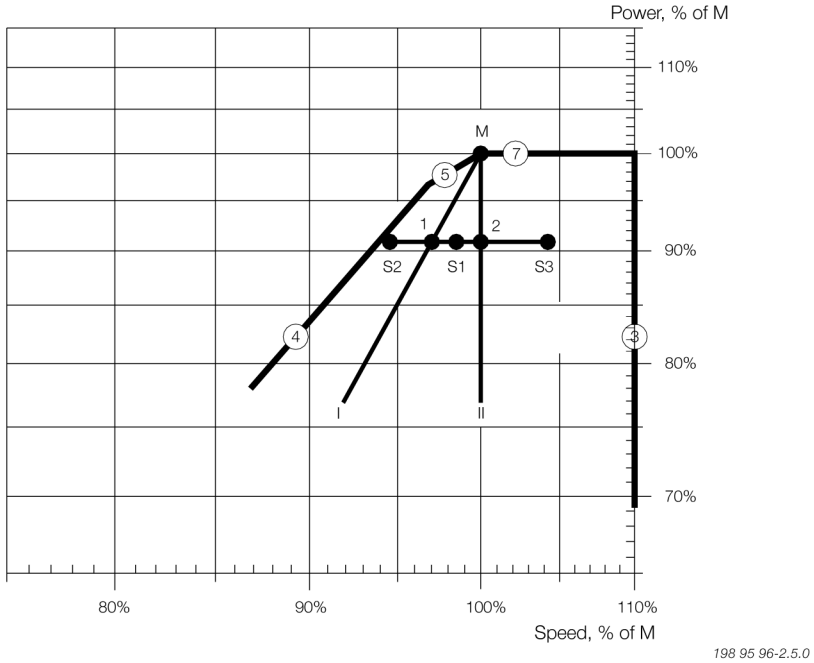

Fig. 2.06.01: SFOC at an arbitrary load

2025-06-16 - en

This page is intentionally left blank

2025-06-16 - en

01 Engine Design
02 Engine Layout and Load Diagrams, SFOC, dot 5
03 Turbocharger Selection & Exhaust Gas Bypass
04 Electricity Production
05 Installation Aspects
06 List of Capacities: Pumps, Coolers & Exhaust Gas
07 Fuel
08 Lubricating Oil
09 Cylinder Lubrication
10 Piston Rod Stuffing Box Drain Oil
11 Low-temperature Cooling Water
12 High-temperature Cooling Water
13 Starting and Control Air
14 Scavenge Air
15 Exhaust Gas
16 Engine Control System
17 Vibration Aspects
18 Monitoring Systems and Instrumentation
19 Dispatch Pattern, Testing, Spares and Tools
20 Project Support and Documentation
21 Appendix

This page is intentionally left blank

Turbocharger selection

General

This section is available on request

This page is intentionally left blank

Climate conditions and exhaust gas bypass

Extreme ambient conditions

As mentioned in Section 1.04 'Engine power range and fuel oil consumption', the engine power figures are valid for tropical conditions at sea level: air at 45°C and 1,000 mbar, and 32°C seawater, whereas the reference fuel consumption is given at ISO conditions: air at 25°C and 1,000 mbar, and 25°C charge air cooling water temperature.

Marine diesel engines are, however, exposed to greatly varying climatic temperatures during winter and summer in arctic and tropical areas. These variations cause changes of scavenge air pressure, maximum combustion pressure, exhaust gas amounts and temperatures, and specific fuel oil consumption.

For further information about the possible countermeasures, refer to our publication titled: *Influence of Ambient Temperature Conditions*

The publication is available at
www.everllence.com → 'Marine' → 'planning-tools and downloads' → 'Technical Papers'.

Arctic running condition

For air inlet temperatures below -10°C, the precautions necessary depend on the operating profile of the vessel. The following option is one of the possible countermeasures. The selection of countermeasures, however, must be evaluated in each individual case.

Exhaust gas receiver with variable bypass

A compensation for low ambient temperatures can be obtained by using an exhaust gas bypass system.

This arrangement ensures that only part of the exhaust gas goes via the turbine of the turbocharger, and therefore less energy is supplied to the compressor which, in turn, reduces the air supply to the engine.

Note that if an exhaust gas bypass is applied, the turbocharger size and specification has to be determined by other means than stated in this section.

2025-06-16 - en

Emergency running condition

Exhaust gas receiver with total bypass flange and blank counterflange

Bypassing the turbocharger completely, so that the exhaust gas does not enter the turbocharger, is done only in emergency running during turbocharger failures, see Fig. 3.02.01.

This enables the engine to run at a higher load with only one turbocharger under emergency conditions. The engine's exhaust gas receiver will in this case be fitted with a bypass flange of approximately the same diameter as the inlet pipe to the turbocharger. The emergency pipe must be supplied by the yard.

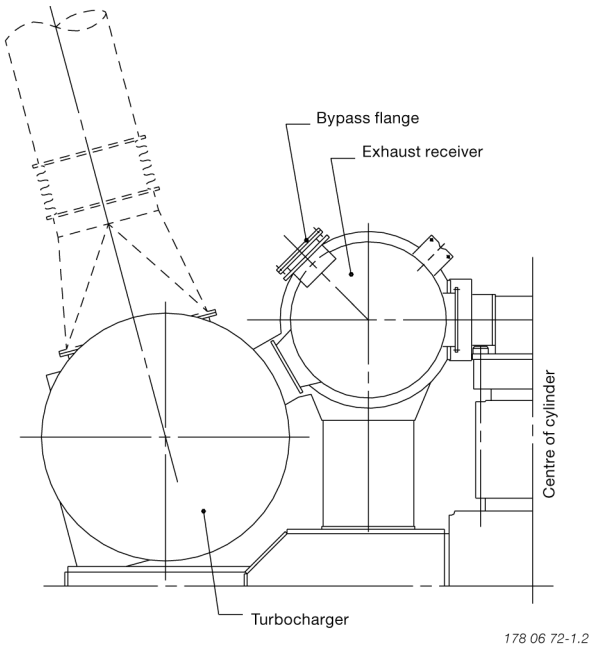

Fig. 3.02.01: Total bypass of exhaust for emergency running

Emission control

IMO Tier II NO_x emission limits

As standard, all ME, ME-B and ME-C/-GI/-GA engines fulfill the IMO Tier II NO_x emission requirements, a speed-dependent NO_x limit measured according to ISO 8178 Test Cycles E2/E3 for Heavy Duty Diesel Engines.

NO_x reduction methods for IMO Tier III

As adopted by IMO for future enforcement, the engine must fulfil the more restrictive IMO Tier III NO_x requirements when sailing in a NO_x emission control area (NECA).

The Tier III NO_x requirements can be met by exhaust gas recirculation (EGR), a method which directly affects the combustion process by lowering the generation of NO_x.

Alternatively, the required NO_x level could be met by installing a selective catalytic reduction (SCR) system, an aftertreatment system that reduces the emission of NO_x already generated in the combustion process.

Details of Everllence NO_x reduction methods for IMO Tier III can be found in our publication:

Emission Project Guide

The publication is available at www.everllence.com 'Project guides' -->'Emission project guides'.

2025-06-16 - en

This page is intentionally left blank

2025-06-16 - en

01 Engine Design
02 Engine Layout and Load Diagrams, SFOC, dot 5
03 Turbocharger Selection & Exhaust Gas Bypass
04 Electricity Production
05 Installation Aspects
06 List of Capacities: Pumps, Coolers & Exhaust Gas
07 Fuel
08 Lubricating Oil
09 Cylinder Lubrication
10 Piston Rod Stuffing Box Drain Oil
11 Low-temperature Cooling Water
12 High-temperature Cooling Water
13 Starting and Control Air
14 Scavenge Air
15 Exhaust Gas
16 Engine Control System
17 Vibration Aspects
18 Monitoring Systems and Instrumentation
19 Dispatch Pattern, Testing, Spares and Tools
20 Project Support and Documentation
21 Appendix

This page is intentionally left blank

Electricity production and hybrid solutions

Introduction

Hotel load and other electric consumptions are significant fuel consumers on a vessel, second only to propulsion power. It is consistently necessary to produce most, if not all, of the electricity on board due to the long voyages. The following machinery produces, running either alone or in parallel, the required electricity:

1. Auxiliary diesel or dual-fuel generating sets
2. Main engine driven generators
3. Exhaust gas or steam driven turbo generators using exhaust gas waste heat
4. Emergency diesel generating sets
5. Marine battery systems
6. Solar cells

The machinery installed should be selected based on the environmental impact, and an economic evaluation of first cost, operating costs, spare part costs, and the demand for work hours for maintenance.

The following sections give technical information about main engine driven generators (power take-off), different PTO configurations with exhaust gas and steam driven turbo generators, and auxiliary diesel generating sets produced by Everllence.

Power take-off

A generator coupled to a power take-off (PTO) from the main engine enables production of electrical power based on the main engine's low specific fuel oil and gas consumption (SFOC/SGC). As of 2020, the use of a PTO solution has a positive effect on the attained EEDI, which can be evaluated according to IMO rules. The PTO maximum service power should be evaluated regarding two independent aspects:

1. Thermal overload of the engine and
2. Rpm stability/load change capability of the engine.

Everllence has developed guidelines to assist you with the layout of systems with PTO. See the next paragraph 'PTO maximum service power' to assess thermal overload. Refer to section 17.06 'Governor stability evaluation for special propulsion plants' for evaluation of the rpm stability/load change capability of the engine. Several standardised PTO systems are available; see the paragraph 'Designation' later in this chapter.

2025-06-16 - en

PTO maximum service power

This document refers to the electrical output of the PTO as PTO_E, the mechanical input to the PTO from the engine as PTO_M and the PTO efficiency as η_{PTO}. They are related according to the following law:

$$PTO_M = \frac{PTO_E}{\eta_{PTO}}$$

Fig. 4.01.01 shows an example of maximum PTO service power (not necessarily rated power) provided by the PTO maker, that is, how much power is available for the specific machinery in the speed range. P_M is the maximum selected power of the PTO, and n_M the maximum selected speed. P_M cannot coincide with the SMCR power of the engine, but n_M can, though it is not always the case.

The designed maximum service power must observe the guideline of Everllence. It means that the maximum service power must be within the boundaries given by the light propeller curve and the PTO layout limit, see section 2.03 'Engine Layout and Load Diagram'.

Due to the general shape of the PTO layout limit and the PTO characteristics, it is sufficient to verify each corner of the operating range with equation 1, equation 2, and equation 3 to avoid thermal overload. In Fig. 4.01.01, those corners are located at 52.5%, 70%, and 100% of the engine speed.

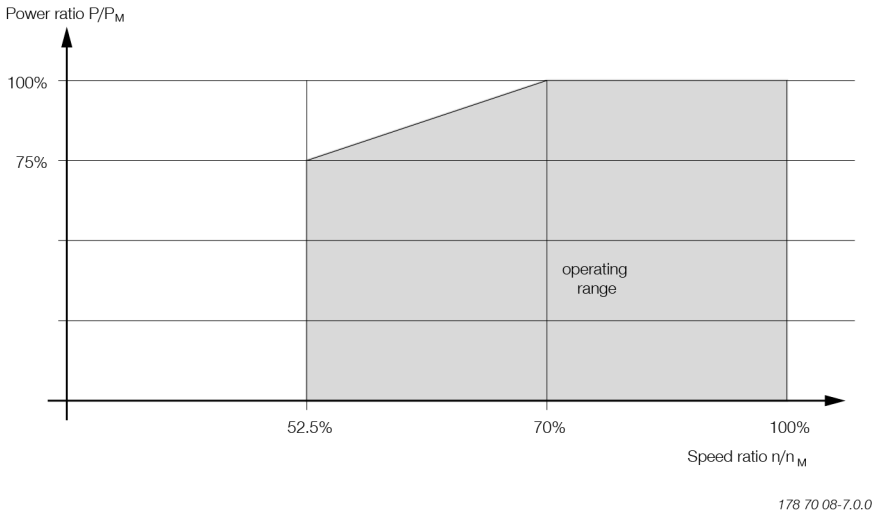

Fig. 4.01.01: Example of PTO maximum service power

$$PTO_M(n) \le P_{SMCR} \times \left[\left(\frac{n}{n_{SMCR}}\right)^{2.4} - \left(\frac{n}{(1+LRM\%)\times n_{SMCR}}\right)^3\right] \quad (1)$$

$$PTO_M(n) \le P_{SMCR} \times \left[1 - \frac{EMP\%}{100\%} - \left(\frac{n}{(1+LRM\%)\times n_{SMCR}}\right)^3\right] \quad (2)$$

$$PTO_M(n) \le P_{SMCR} \times \left[\frac{95\%}{100\%} \times \left(\frac{n}{n_M}\right) - \left(\frac{n}{(1+LRM\%)\times n_{SMCR}}\right)^3\right] \quad (3)$$

2025-06-16 - en

P_{SMCR} and n_{SMCR} is the power, and the engine speed of rotation at the SMCR point, respectively. n is the specific engine speed of rotation at which the mechanical PTO power is generated, LRM is the propeller light running margin, and EMP the engine margin for PTO operation (the minimum recommended margin is 5%).

2025-06-16 - en

Designation

A PTO system can be designed in different way. Everllence categorises a design according to two classifications: engine-to-generator and generator-to-grid.

The engine-to-generator classification relates to the position of the PTO system, and the connection between the engine and the system. The generator-to-grid classification relates to the frequency of the power fed to the grid, and the systems between the generator and the grid.

The generator-to-grid classification relates to:

1. The frequency of the power fed to the grid but also to
2. The type of/composition of the systems between the generator and the grid.

Two positions are available on the engine for the installation of a PTO system: the aft end (towards the propeller) and the front end. Side-mounted systems are currently not available. Front-end mounted generators can be mounted on-engine or on-tank-top.

They can be connected either using an elastic coupling or directly coupled to the crankshaft. Aft-end mounted generators are mounted either on the shaft or through a tunnel-gear. Fig. 4.01.02 illustrates the options. It is important to note that some of the PTO solutions might not be commercially available depending on engine bore size

Position	Seating	Connection		Abbreviation
Front-end	On engine	Geared (with elastic coupling)		FEG
Front-end	On engine	Direct (no gear)	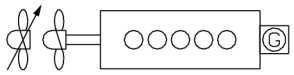	FED
Front-end	On tank top	Geared (with elastic coupling)	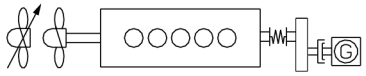	FTG
Front-end	On tank top	Direct (no gear)		FTD
Aft-end	Shaft-mounted	Direct (no gear)	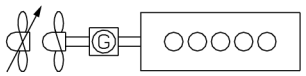	ASM
Aft-end	Tunnel-geared	Geared (with elastic coupling)	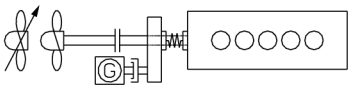	ATG

178 70 07-5.0.0

Fig. 4.01.02: PTO layout

2025-06-16 - en

The fluctuations in the frequency of the output electric current generated by the shaft generator are proportional to the variation of the engine speed of rotation that occurs during normal operation. Most of the electric equipment cannot withstand large fluctuations of the current's frequency. As a result, the system is either limited to a range in which the PTO can be operated, or a frequency control system must be included.

Therefore, Everllence has defined two categories for PTO frequency types, or generator-to-grid systems (Fig. 4.01.03). The first category is systems with a frequency converter, and the second category is systems with synchronous frequency. The latter has a possible sub-designation of floating frequency (Fig. 4.01.04), which is further explained in ‘Floating Frequency System’.

System		Abbreviation
Frequency Coverter	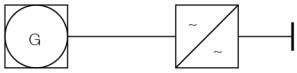	FC
Synchronous Frequency*	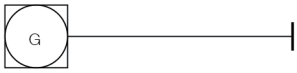	SF

178 70 09-9.0.0

Fig. 4.01.03: PTO frequency type

System		Abbreviation
*Floating Frequency Possible system with synchronous frequency	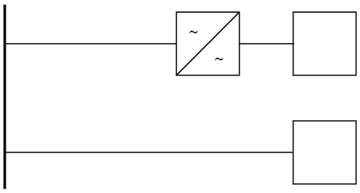	FF

178 70 10-9.0.0

Fig. 4.01.04: PTO frequency type (optional)

On the design specification order (DSO), there are two spaces to fill in. The PTO type, which refers to Fig. 4.01.02 and the PTO frequency type, which consists of the three options displayed on Figs. 4.01.03 and Fig. 4.01.04.

2025-06-16 - en

Example

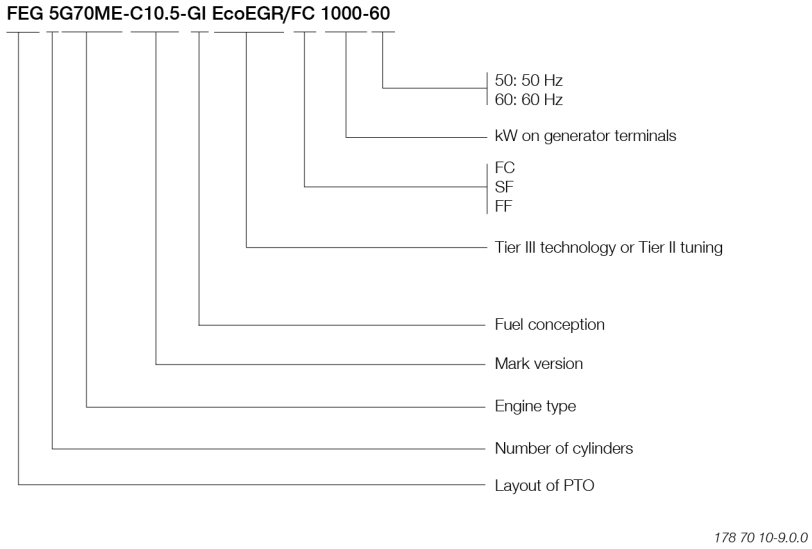

Fig. 4.01.05: Example of designation

2025-06-16 - en

Similarity between old and new PTO designations

Everllence has implemented a new way of designating PTO systems. For this reason, Fig. 4.01.06 shows the relation between old and new designations. The figure also shows how RENK's systems are designated. Side-mounted PTO and RCF (RENK Constant Frequency) solutions are discontinued, and therefore no longer offered.

New designation	Old designation		RENK
FEG FC	Not available		IFPS
FEG SF	BW I	GCR RCF*	RCF*
FED FC	DMG	CFE	
FED SF	Not available		
FTG FC	Not available		
FTG SF	BW II	GCR RCF*	RCF*
FTD FC	Not available		
FTD SF	Not available		
ASM FC	SMG	CFE	
ASM SF	Not available		
ATG FC	Not available		
ATG SF	BW IV	GCR RCF*	RCF*
N/A	BW III*	GCR RCF*	RCF*

* Discontinued

Table 4.01.01: Equivalence between old and new PTO designations

2025-06-16 - en

Floating frequency systems

If most of the electrical equipment is suited for a supply with varying frequency, for example between 50 - 60 Hz, a PTO/SF configuration can be the economically and technically best solution. It consists of a constant gear ratio, that is, the frequency follows the engine speed. However, the PTO will be able to generate the required electricity within an engine load range of approximately 52% to 90% (80% to 97% of the SMCR speed). For the limited part of equipment, which requires a fixed frequency, a smaller frequency converter can be used.

Bulk carriers, tankers, and other vessels with low variations in cruise speed will obtain the following advantages:

- It is simple and thereby reliable
- Simple electrical system
- Highest possible efficiency (approximately 95%)
- Relatively cheap.
- Lower electrical power consumption at part load due to the lower speed. This will also function as an optimisation of auxiliary systems, since the required power automatically reduces at lower engine loads, whereas in a normal system, the power required by auxiliary systems is constant.

On the other hand, parallel running of an auxiliary engine and the PTO system is not possible with such systems, since it requires a frequency converter.

The installation of a PTO/SF system is restricted to a certain speed range, but most likely, a speed range can be chosen according to the most typical engine operating range. The electric equipment must be evaluated to establish the correct dimensioning. As an example, the main engine lube oil pumps must be dimensioned for the required flow at 50 Hz. Therefore, it is recommended to use a centrifugal lube oil pump.

2025-06-16 - en

Power take-off solutions supplied by RENK

PTO maker and supplier, RENK, provides two specific solutions: An integrated front-end solution and a tunnel gearbox solution. These systems have different layouts and characteristics.

RENK IFPS© integrated front-end power system

Fig. 4.02.01 shows the RENK IFPS.

1. Tuning wheel
2. Pinion
3. Generator
4. Gear wheel
5. High elastic coupling
6. Crankshaft
7. Intermediate shaft

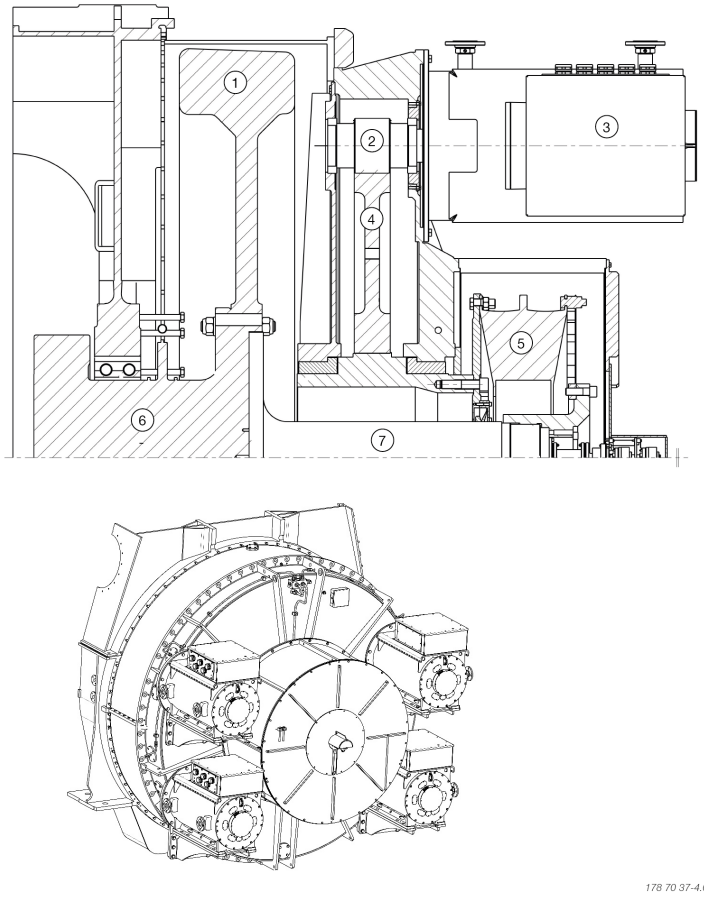

Fig. 4.02.01: Components of the IFPS

The RENK IFPS features from one and up to four generators connected to the crankshaft via a single-step gearbox. The high-ratio gearbox is designed for limited engine room space, and mounted on the engine fore end without an additional foundation.

The IFPS system has been developed in cooperation with the German gearbox manufacturer RENK. As standard, it is available for PTO powers of 500, 1,000, 1,500 and 2,000 kW. The intermediate shaft is mounted directly on the crankshaft and its gearbox housing is bolted onto a strengthened front-end cover. The system is compatible with a tuning wheel if required by torsional vibration conditions. As an option, an angle encoder can be mounted on the gearbox front side.

2025-06-16 - en

IFPS delivery includes:

- Gearbox incl. intermediate shaft
- Elastic coupling
- One to four generators
- IGBT active infeed frequency converter
- Transformer

The IFPS is designed for operation with full output PTO-power between 100% and 70% specified speed, and with reduced power down to 50% of the engine speed at specified MCR (see Fig. 4.02.02).

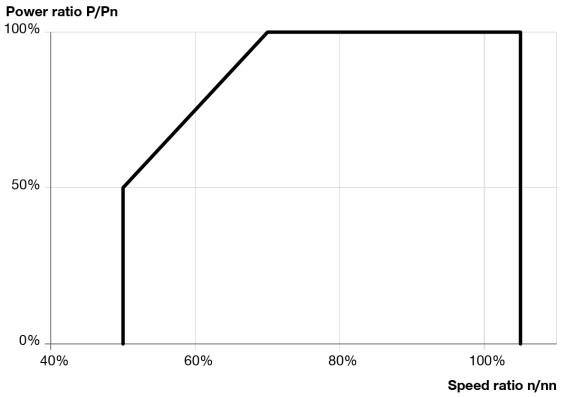

603 20 50-3.0.0

Fig. 4.02.02: Operating range of the IFPS

An insulated-gate bipolar transistor (IGBT) active infeed converter provides the constant grid frequency. The system can supply reactive power to the electric mains without a synchronous condenser, and causes negligible harmonics to the grid.

Fig. 4.02.03 shows a diagram of the IFPS and the described converter system.

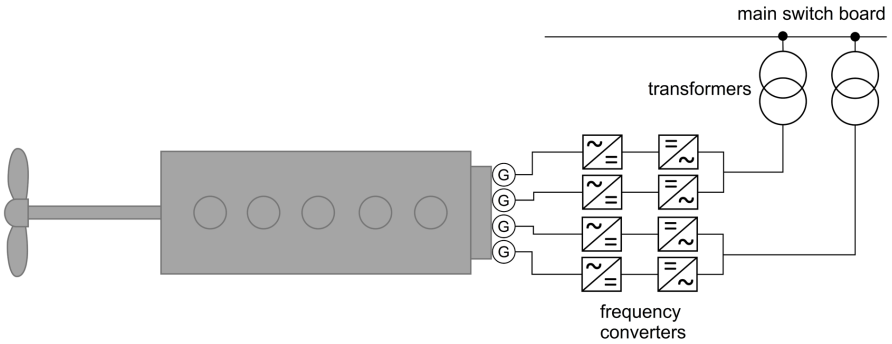

603 20 50-3.0.0

Fig. 4.02.03: Diagram of IFPS with active infeed converters and transformer

With a small modification, the IFPS can be operated both as a generator (PTO) and as a motor (PTI).

RENK MARHY© auxiliary propulsion system/take-home system

Special applications require an auxiliary propulsion system/take-home system capable of driving the propeller by using the shaft generator as an electric motor.

Everllence can provide a solution where the propeller is driven by the alternator via a tunnel gearbox (RENK MARHY©). A number of gensets produce the electric power for the propulsion mode.

The main engine is disengaged by a propeller shaft clutch (RENK PSC) which is made as an integral part of the shafting. The clutch is installed between the tunnel gearbox and the main engine. Torque transmission will be switched by a hydraulically engaged backlash-free conical toothing. Equipped with a fully automatic PSC, the RENK MARHY© system can quickly establish auxiliary propulsion, and switch back to PTO operation from the engine control room and/or the bridge, even with an unmanned engine room. The built-in thrust bearing transfers the propulsion propeller thrust to the engine thrust bearing in both operating modes. In disengaged condition, a pair of sleeve bearings transmit the bending moments and shear forces within the propeller shaft line.

To minimise the required power for auxiliary propulsion mode, a two-speed tunnel gearbox can be used, which provides a lower propeller speed and, therefore, a higher propeller efficiency in auxiliary propulsion mode.

The MARHY© system in Fig. 4.02.04 includes:

- PSC clutch
- Tunnel gearbox
- Elastic coupling for gearbox input and output
- Generator/motor
- IGBT active infeed converter frequency converter
- Transformer

2025-06-16 - en

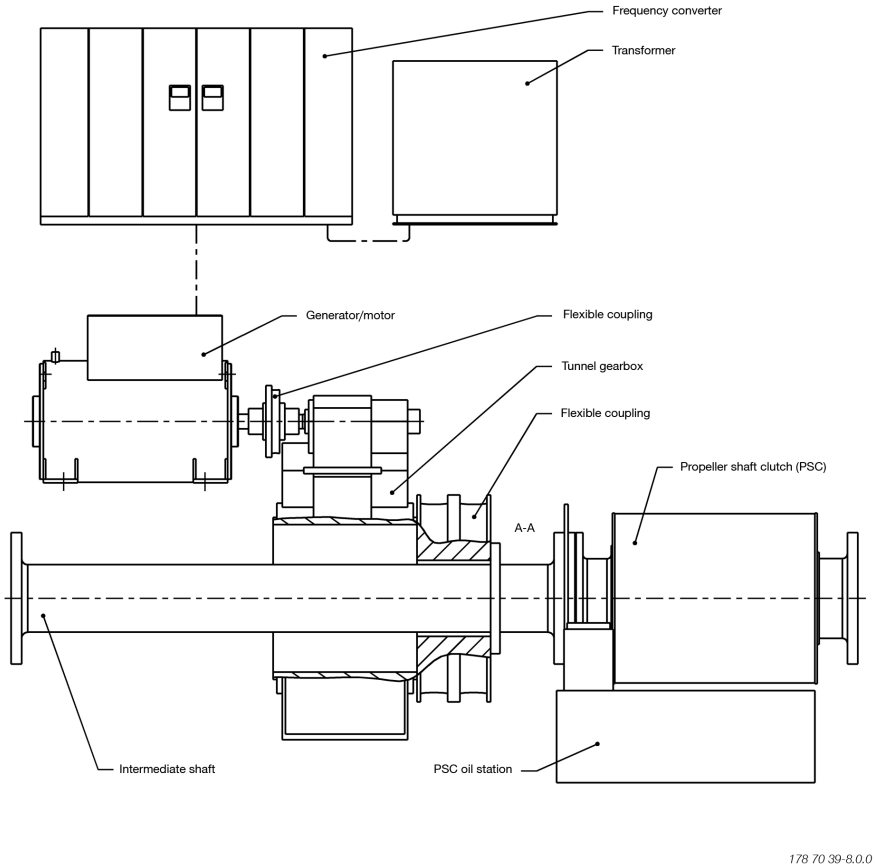

Fig. 4.02.04: Generic outline of the auxiliary propulsion system

Steps for obtaining approval of a PTO solution

Everllence frequently receives enquiries about the different PTO solutions described in Section 4.01. To facilitate the process of getting a project approved, follow the necessary steps described here:

1. PTO layout guidance.

   The sizing of the PTO generator must adhere to the layout guide from Everllence. The guide stipulates the maximum PTO mechanical power from the main engine in relation to the SMCR chosen. Sections 2.03 and 4.01 describe this in detail.

2. Governor stability evaluation for special propulsion plants (17.06)

   When a PTO generator is connected to the ship's electrical grid, it becomes important to evaluate whether the power management system and the main engine can cope with the frequency converter's inhered negative damping on rpm stability. The sizing of the PTO generator must fulfil the criteria of Everllence to prevent insufficient stability of the system. Furthermore, Everllence can provide interface documentation for the connection between the main engine control system and the ship's power management system. For more information, see Section (17.06).

3. Torsional vibration.

   The entire propulsion train: Main engine, shafting, propeller, and PTO, must fulfil class rules concerning torsional (and axial) vibrations. This must be evaluated in each individual case, because every case deviates from the other. If required, Everllence can assist with the analysis. Otherwise, it is normally a matter of shipyard responsibility. It might be required, sometimes that a torsional vibration damper is installed.

4. Specifically for main engine front-end mounted PTO solutions.

   For front-end mounted PTO solutions such as RENK IFPS or HHI EMG, the interface between the main engine front end and the PTO system must be identified to determine the scope of delivery together with that of the main engine, and the PTO solution. The result of the torsional analysis can involve installation of large tuning wheels and/or torsional dampers, which will affect the scope of delivery. This can necessitate the installation of an extra bearing on the main engine side to cope with the weight of these parts. Be aware that such cases differ from one another, and that Everllence can assist in the evaluation of whether direct mounted PTO solutions can be accepted or not.

We strongly recommend that shipyards involve Everllence in the design phase of a new ship with a PTO solution. It is important to choose the correct PTO size compared to the main engine size, and to comply with the IMO EEDI rules. Figs. 1–4 show examples of different PTO solutions.

Figs. 1–4 show examples of different PTO solutions.

2025-06-16 - en

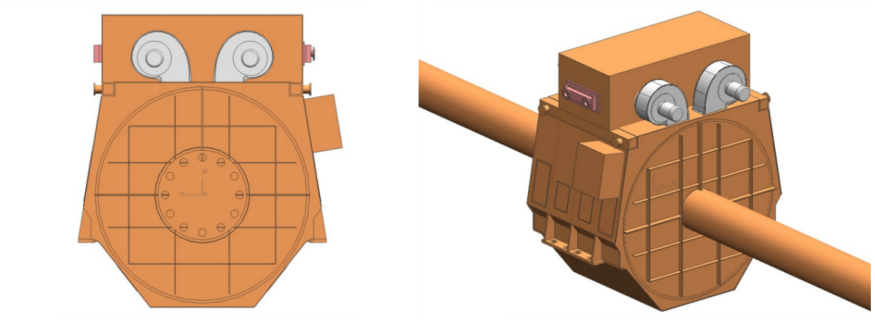

178 70 34-9.0

Fig. 1: Intermediate shaft mounted generator. A solution mostly used on large container ships using high-power PTO generator sizes. Image of intermediate shaft mounted generator for the EEE class synchronous motor/generator (by Ccourtesy of Siemens).

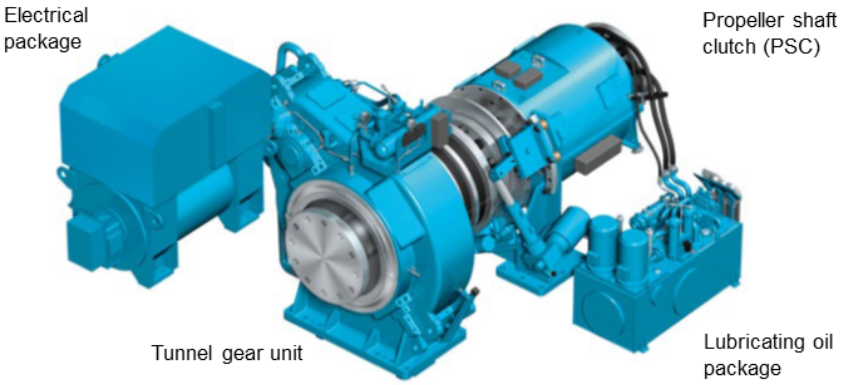

178 70 35-0.0

Fig. 2: An example of a tunnel-geared PTO generator solution – RENK MAR-HY®. The solution is used for many different ship types, but in particular for ro-ro ships and container feeders (Courtesy of RENK).

RENK/Shipyard scope

1. Gearbox housing
2. Bull gear
3. PM generators
4. Intermediate shaft
5. Coupling cover
6. Highly flexible cover

Bolt connection between intermediate shaft and crankshaft

Bolt connection between intermediate shaft and crankshaft

MAN-ES/Engine maker scope

7. Front-end cover
8. Tuning wheel or TV damper
9. Crankshaft
10. M/E angle encoder

Bolt connection between crankshaft and tuning wheel or TV damper

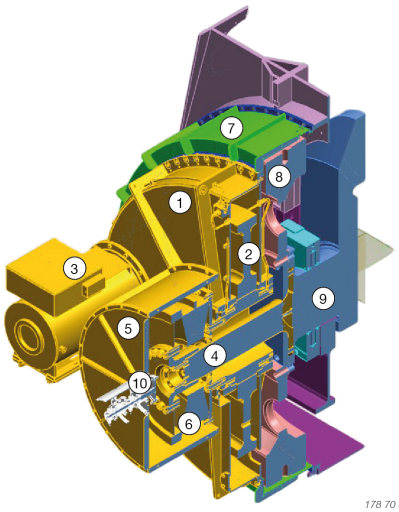

178 70 32-5.0

Fig. 3: Main engine front-end mounted PTO – RENK IFPS. The new PTO solution allows for a short engine room due to the short total length of main engine and PTO. The solution is particularly useful for tankers and bulk carriers (. Courtesy of RENK).

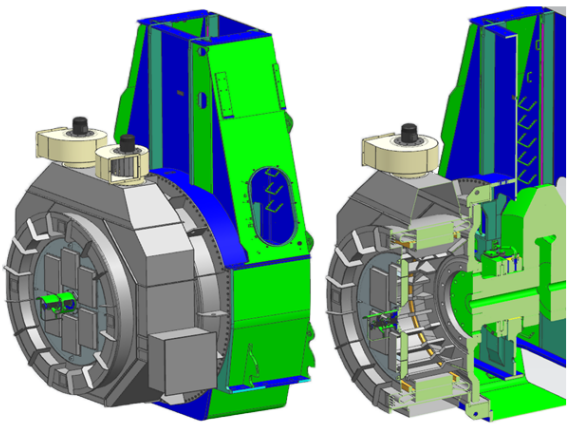

Fig. 4: Main engine front-end mounted PTO – HHI EMG (Engine Mounted Generator). The new PTO solution allows the maximum cargo capacity with its short installation space, especially for tankers, LNGC carriers, and bulk carriers (Courtesy of HHI).

2025-06-16 - en

This page is intentionally left blank

2025-06-16 - en

Power take off/gear constant ratio

PTO type: BW II/GCR

Power Take Off/Gear Constant Ratio

The PTO system type BW II/GCR illustrated in Fig. 4.01.01 alternative 5 can generate electrical power on board ships equipped with a controllable pitch propeller, running at constant speed.

The PTO unit is mounted on the tank top at the fore end of the engine see Fig. 4.04.01. The PTO generator is activated at sea, taking over the electrical power production on board when the main engine speed has stabilised at a level corresponding to the generator frequency required on board.

The installation length in front of the engine, and thus the engine room length requirement, naturally exceeds the length of the engine aft end mounted shaft generator arrangements. However, there is some scope for limiting the space requirement, depending on the configuration chosen.

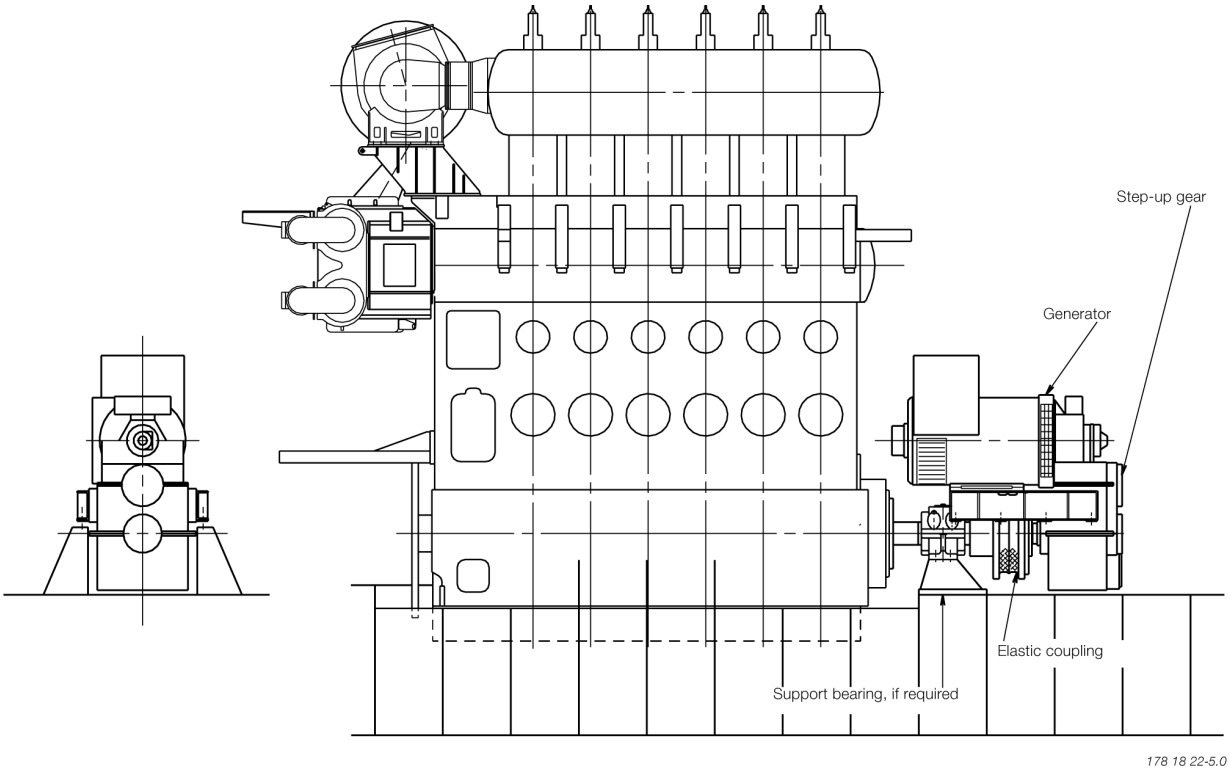

Fig. 4.04.01: Generic outline of Power Take Off (PTO) BW II/GCR

2025-06-16 - en

PTO type: BW IV/GCR

Power Take Off/Gear Constant Ratio

The shaft generator system, type PTO BW IV/ GCR, installed in the shaft line (Fig. 4.01.01 alternative 6) can generate power on board ships equipped with a controllable pitch propeller running at constant speed.

The PTO system can be delivered as a tunnel gear with hollow flexible coupling or, alternatively, as a generator step-up gear with thrust bearing and flexible coupling integrated in the shaft line.

The main engine needs no special preparation for mounting these types of PTO systems as they are connected to the intermediate shaft.

The PTO system installed in the shaft line can also be installed on ships equipped with a fixed pitch propeller or controllable pitch propeller running in combinator mode. This will, however, require an additional Constant Frequency gear (Fig. 4.01.01 alternative 2) or additional electrical equipment for maintaining the constant frequency of the generated electric power.

Tunnel gear with hollow flexible coupling

This PTO system is normally installed on ships with a minor electrical power take off load compared to the propulsion power, up to approximately 25% of the engine power.

The hollow flexible coupling is only to be dimensioned for the maximum electrical load of the power take off system and this gives an economic advantage for minor power take off loads compared to the system with an ordinary flexible coupling integrated in the shaft line.

The hollow flexible coupling consists of flexible segments and connecting pieces, which allow replacement of the coupling segments without dismounting the shaft line, see Fig. 4.04.02.

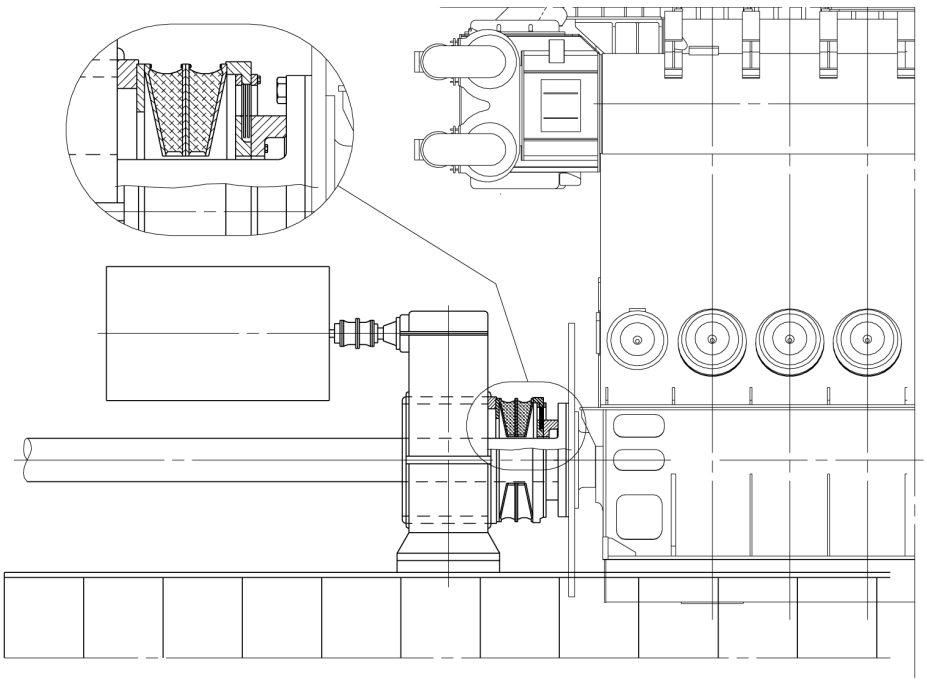

178 18 25-0.1

Fig. 4.04.02: Generic outline of BW IV/GCR, tunnel gear

Generator step-up gear and flexible coupling integrated in the shaft line

For higher power take off loads, a generator step-up gear and flexible coupling integrated in the shaft line may be chosen due to first costs of gear and coupling.

The flexible coupling integrated in the shaft line will transfer the total engine load for both propulsion and electrical power and must be dimensioned accordingly.

The flexible coupling cannot transfer the thrust from the propeller and it is, therefore, necessary to make the gearbox with an integrated thrust bearing.

This type of PTO system is typically installed on ships with large electrical power consumption, e.g. shuttle tankers.

Auxiliary propulsion system/take home system

From time to time an Auxiliary Propulsion System/ Take Home System capable of driving the CP propeller by using the shaft generator as an electric motor is requested.

Everllence can offer a solution where the CP propeller is driven by the alternator via a two speed tunnel gear box. The electric power is produced by a number of GenSets. The main engine is disengaged by a clutch (RENK PSC) made as an integral part of the shafting. The clutch is installed between the tunnel gear box and the main engine, and conical bolts are used to connect and disconnect the main engine and the shafting. See Figure 4.04.03.

A thrust bearing, which transfers the auxiliary propulsion propeller thrust to the engine thrust bearing when the clutch is disengaged, is built into the RENK PSC clutch. When the clutch is engaged, the thrust is transferred statically to the engine thrust bearing through the thrust bearing built into the clutch.

To obtain high propeller efficiency in the auxiliary propulsion mode, and thus also to minimise the auxiliary power required, a two speed tunnel gear, which provides lower propeller speed in the auxiliary propulsion mode, is used.

The two speed tunnel gear box is made with a friction clutch which allows the propeller to be clutched in at full alternator/motor speed where the full torque is available. The alternator/motor is started in the declutched condition with a start transformer.

The system can quickly establish auxiliary propulsion from the engine control room and/or bridge, even with unmanned engine room.

Reestablishment of normal operation requires attendance in the engine room and can be done within a few minutes.

2025-06-16 - en

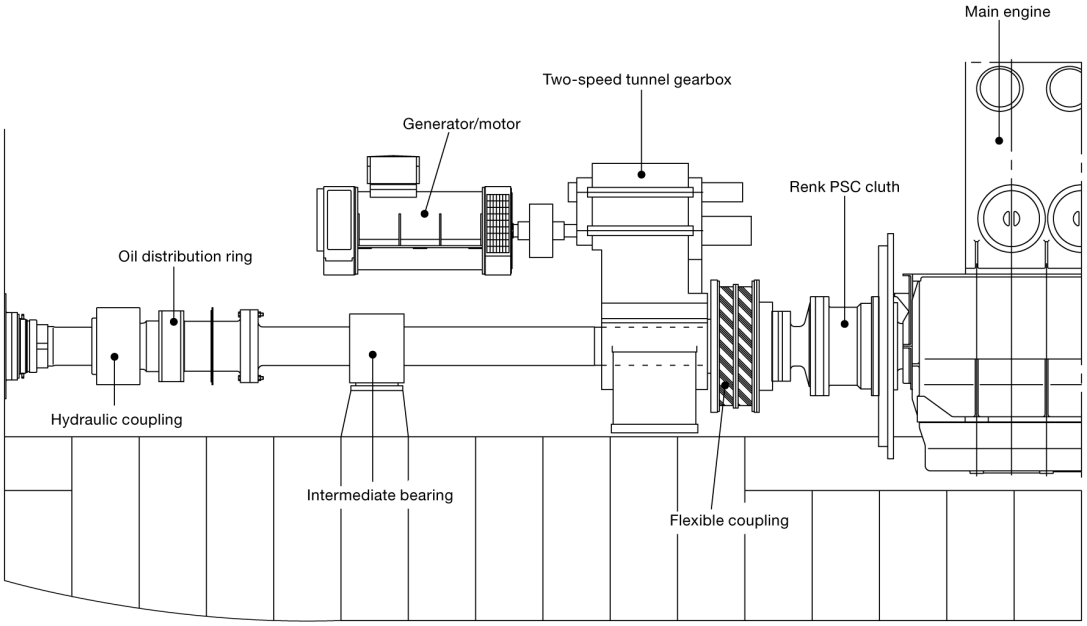

178 57 16-9.0

Fig. 4.04.03: Auxiliary propulsion system

Waste heat recovery systems - TII

General

Due to the increasing fuel prices seen from 2004 and onwards many shipowners have shown interest in efficiency improvements of the power systems on board their ships. A modern two-stroke diesel engine has one of the highest thermal efficiencies of today's power systems, but even this high efficiency can be improved by combining the diesel engine with other power systems.

One of the possibilities for improving the efficiency is to install one or more systems utilising some of the energy in the exhaust gas after the two-stroke engine, which in Everllence terms is designated as WHRS (Waste Heat Recovery Systems).

WHRS can be divided into different types of subsystems, depending on how the system utilises the exhaust gas energy. Choosing the right system for a specific project depends on the electricity demand on board the ship and the acceptable first cost for the complete installation. Everllence uses the following designations for the current systems on the market:

• PTG (Power Turbine Generator):
An exhaust gas driven turbine connected to a generator via a gearbox.

• STG (Steam Turbine Generator):
A steam driven turbine connected to a generator via a gearbox. The steam is produced in a large exhaust gas driven boiler installed on the main engine exhaust gas piping system.

• Combined Turbines:
A combination of the two first systems. The arrangement is often that the power turbine is connected to the steam turbine via a gearbox and the steam turbine is further connected to a large generator, which absorbs the power from both turbines.

The PTG system will produce power equivalent to approx. 3.5% of the main engine SMCR, when the engine is running at SMCR. For the STG system this value is between 5 and 7% depending on the system installed. When combining the two systems, a power output equivalent to 10% of the main engine's SMCR is possible, when the engine is running at SMCR.

The WHRS output depends on the main engine rating and whether service steam consumption must be deducted or not.

As the electrical power produced by the system needs to be used on board the ship, specifying the correct size system for a specific project must be considered carefully. In cases where the electrical power consumption on board the ship is low, a smaller system than possible for the engine type may be considered. Another possibility is to install a shaft generator/motor to absorb excess power produced by the WHRS. The main engine will then be unloaded, or it will be possible to increase the speed of the ship, without penalising the fuel bill.

Because the energy from WHRS is taken from the exhaust gas of the main engine, this power produced can be considered as "free". In reality, the main engine SFOC will increase slightly, but the gain in electricity production on board the ship will far surpass this increase in SFOC. As an example, the

2025-12-15 - en

SFOC of the combined output of both the engine and the system with power and steam turbine can be calculated to be as low as 152 g/kWh (ref. LCV 42,700 kJ/kg).

Power turbine generator (PTG)

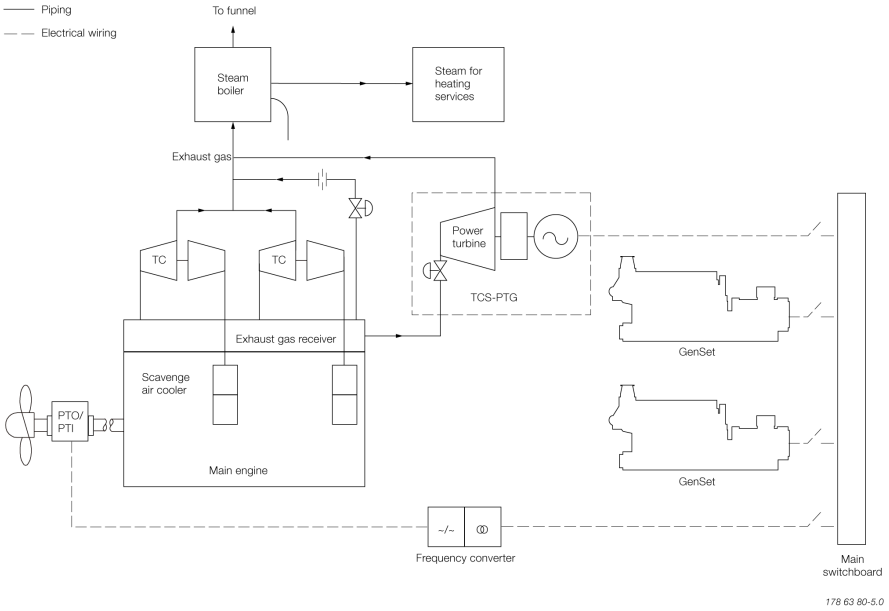

Fig. 4.05.01: PTG diagram

The power turbines of today are based on the different turbocharger suppliers' newest designs of high efficiency turbochargers, i.e. Everllence TCA, Accelleron A-L and Mitsubishi MET turbochargers.

Everllence offers PTG solutions called TCS-PTG in the range from approx. 1,000 kW to 5,000 kW, see Fig. 4.05.02.

The power turbine basically is the turbine side of a normal high-efficient turbocharger with some modifications to the bearings and the turbine shaft. This is in order to be able to connect it to a gearbox instead of the normal connection to the compressor side. The power turbine will be installed on a separate exhaust gas pipe from the exhaust gas receiver, which bypasses the turbochargers.

The performance of the PTG and the main engine will depend on a careful matching of the engine turbochargers and the power turbine, for which reason the turbocharger/s and the power turbine need to be from the same manufacturer. In Fig. 4.05.01, a diagram of the PTG arrangement is shown.

The newest generation of high efficiency turbochargers allows bypassing of some of the main engine exhaust gas, thereby creating a new balance of the air flow through the engine. In this way, it is possible to extract power from the power turbine equivalent to 3.5% of the main engine's SMCR, when the engine is running at SMCR.

2025-12-15 - en

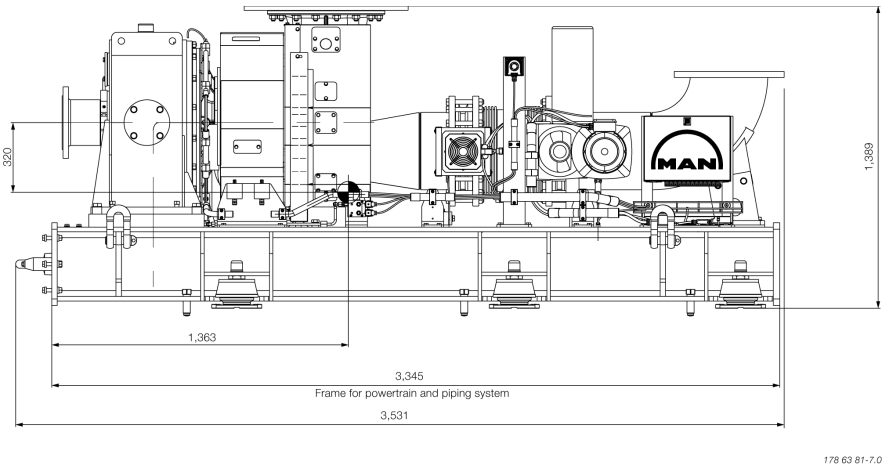

Fig. 4.05.02: Everllence *1,500 kW TCS-PTG solution*

2025-12-15 - en

Steam turbine generator (STG)

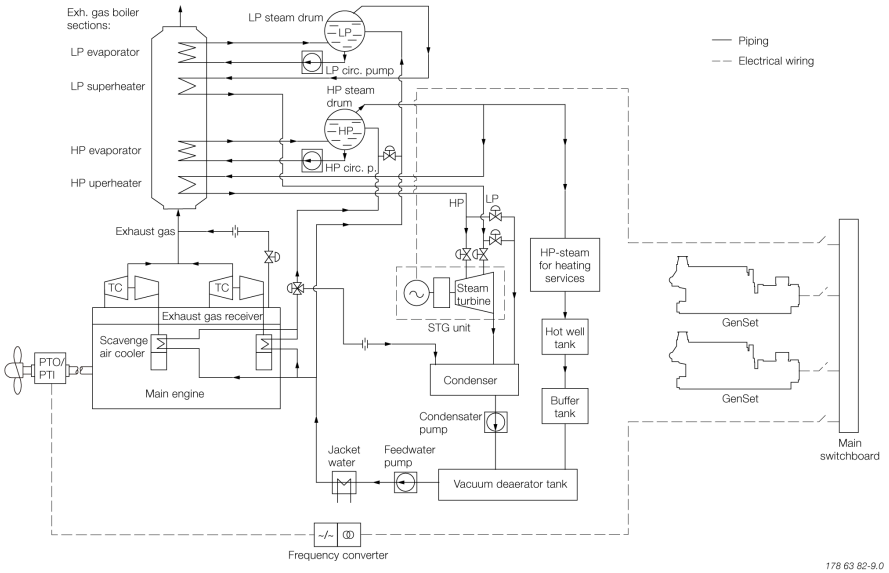

Fig. 4.05.03: STG system diagram

In most cases the exhaust gas pipe system of the main engine is equipped with a boiler system. With this boiler, some of the energy in the exhaust gas is utilised to produce steam for use on board the ship.

If the engine is WHR matched, the exhaust gas temperature will be between 50°C and 65°C higher than on a conventional engine, which makes it possible to install a larger boiler system and, thereby, produce more steam. In short, Everllence designates this system STG. Fig. 4.05.03 shows an example of the STG diagram.

For WHR matching the engine, a bypass is installed to increase the temperature of the exhaust gas and improve the boiler output. The bypass valve is controlled by the engine control system.

The extra steam produced in the boiler can be utilised in a steam turbine, which can be used to drive a generator for power production on board the ship. A STG system could be arranged as shown in Fig. 4.05.04, where a typical system size is shown with the outline dimensions.

The steam turbine can either be a single or dual pressure turbine, depending on the size of the system. Steam pressure for a single pressure system is 7 to 10 bara, and for the dual pressure system the high-pressure cycle will be 9 to 10 bara and the low-pressure cycle will be 4 to 5 bara.

2025-12-15 - en

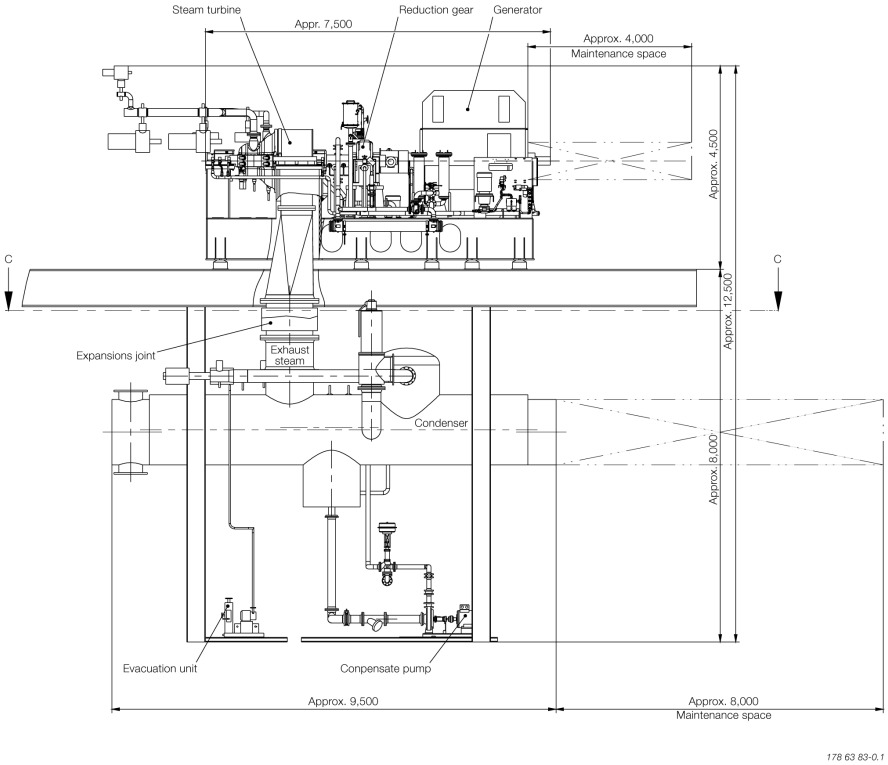

Fig. 4.05.04 : STG steam turbine generator arrangement with condenser - typical arrangement

Full WHRS steam and power turbines combined

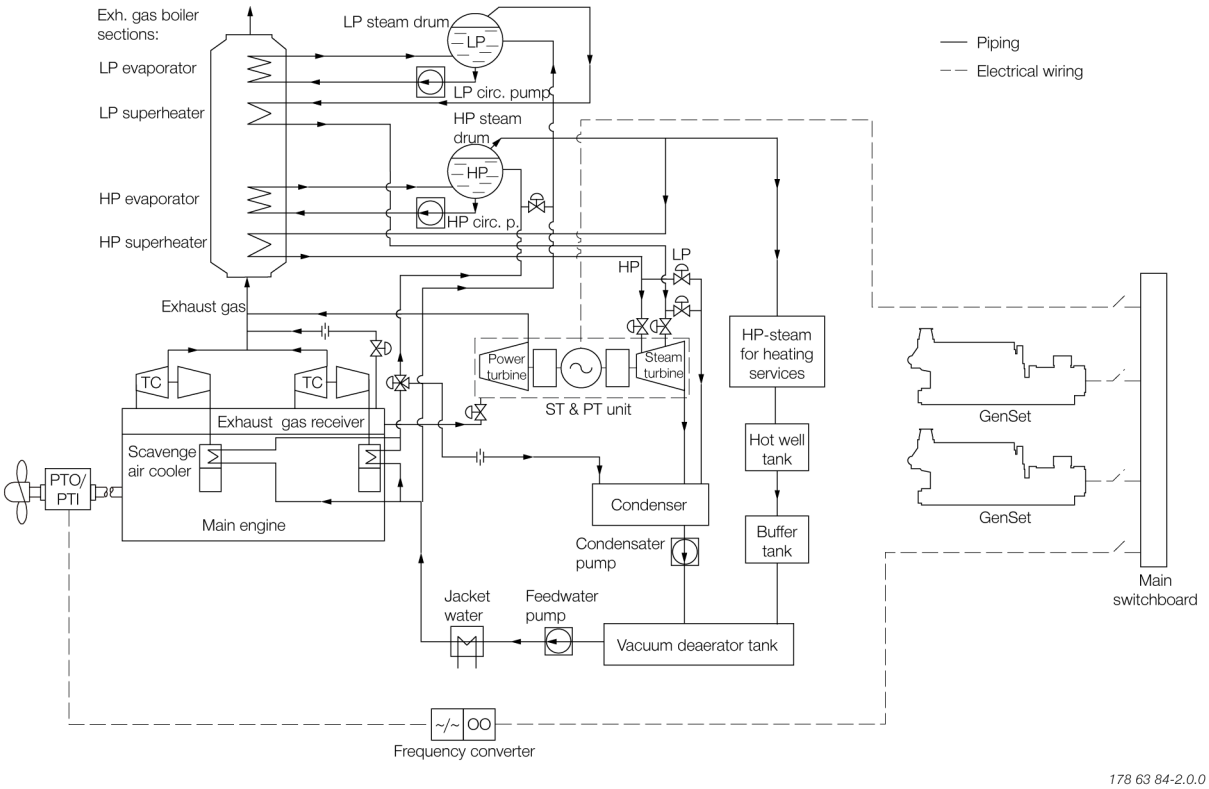

Fig. 4.05.05: Full WHRS with both steam and power turbines

Because the installation of the power turbine also will result in an increase of the exhaust gas temperature after the turbochargers, it is possible to install both the power turbine, the larger boiler and steam turbine on the same engine. This way, the energy from the exhaust gas is utilised in the best way possible by today's components.

When looking at the system with both power and steam turbine, quite often the power turbine and the steam turbine are connected to the same generator. In some cases, it is also possible to have each turbine on a separate generator. This is, however, mostly seen on stationary engines, where the frequency control is simpler because of the large grid to which the generator is coupled.

For marine installations the power turbine is, in most cases, connected to the steam turbine via a gearbox, and the steam turbine is then connected to the generator. It is also possible to have a generator with connections in both ends, and then connect the power turbine in one end and the steam turbine in the other. In both cases control of one generator only is needed.

For dimensions of a typical full WHRS see Fig. 4.05.06.

As mentioned, the systems with steam turbines require a larger boiler to be installed. The size of the boiler system will be considerably bigger than the size of an ordinary boiler system, and the actual boiler size has to be calculated from case to case. Casing space for the exhaust boiler must be reserved in the initial planning of the ship's machinery spaces.

2025-12-15 - en

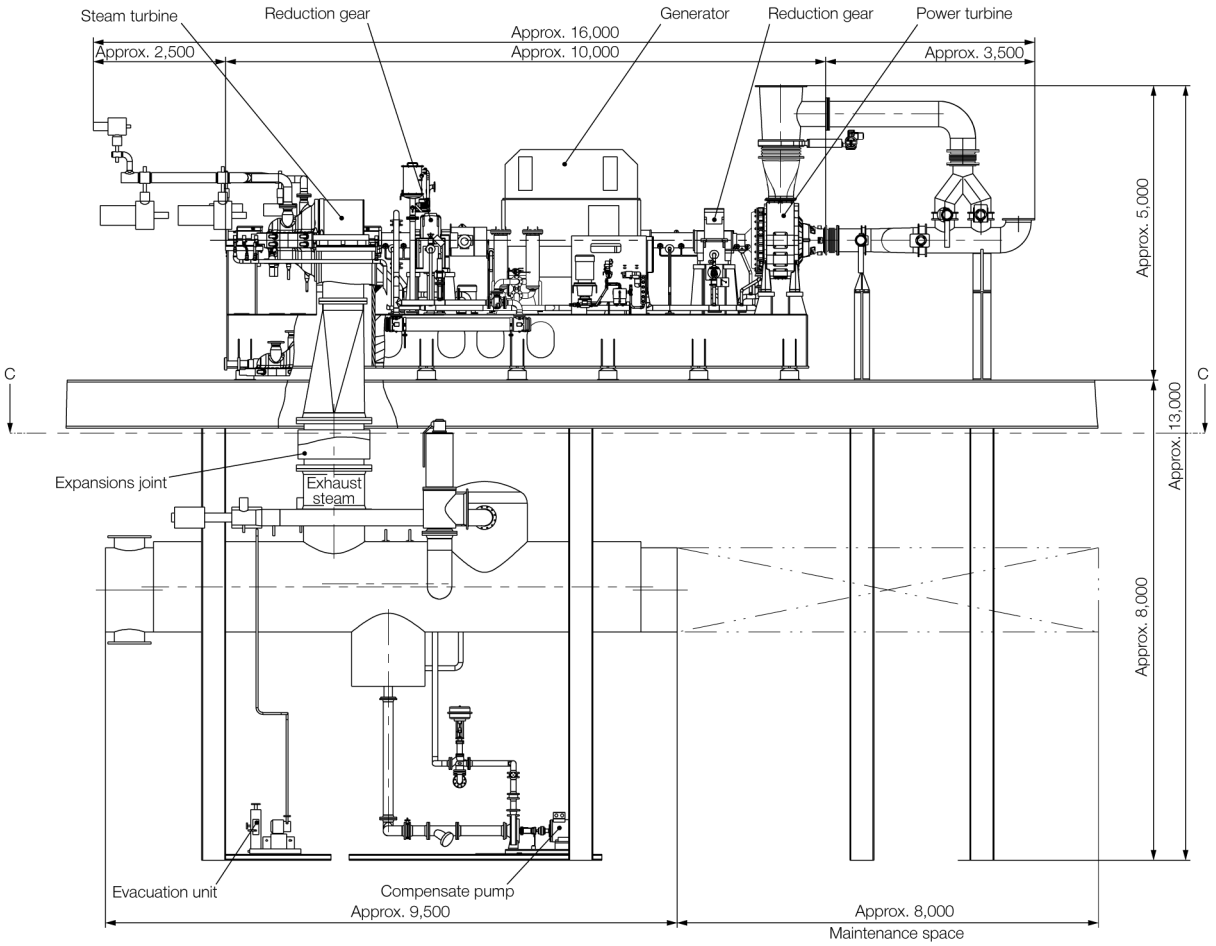

Fig. 4.05.06: Full ST & PT full waste heat recovery unit arrangement with condenser - typical arrangement

2025-12-15 - en

WHRS Generator output

Guidance output of WHR for G70ME-C10.5 engine rated in L_1 at ISO conditions					
Cyl.	Engine power		PTG	STG	Full WHRS
	% SMCR	kW	kWe	kWe	kWe
5	100	15,300	400	690	1,090
	75	11,475	330	400	730
6	100	18,360	480	890	1,370
	75	13,770	390	520	910

Note 1: The above given preliminary WHRS generator outputs is based on HP service steam consumption of 0.3 ton/h and LP service steam consumption of 0.7 ton/h for the ship at ISO condition.

Note 2: 75% SMCR is selected due to the EEDI focus on the engine load.

Table 4.05.07: Theoretically calculated outputs

Because all the components come from different manufacturers, the final output and the system efficiency have to be calculated from case to case.

However, Table 4.05.07 shows a guidance of possible outputs in L_1 based on theoretically calculated outputs from the system.

2025-12-15 - en

WHRS output at a rating lower than L_1

As engines are seldom rated in L_1, it is recommended to contact Everllence Copenhagen, department Marine Project Engineering,
e-mail: lee5@everllence.com for specific WHRS generator output.

In order to receive as correctly as possible an engine tuned for WHRS data, please specify requested engine rating (power × rpm) and ship service steam consumption (kg/hour).

Detailed information about the different WHRS systems is found in our publication:

Waste Heat Recovery System (WHRS)

The publication is available at
www.everllence.com → 'Marine' → 'Planning Tools and Downloads' → 'Technical Papers'.

Waste heat recovery element and safety valve

The boiler water or steam for power generator is preheated in the Waste Heat Recovery (WHR) element, also called the first-stage air cooler.

The WHR element is typically built as a high-pressure water/steam heat exchanger which is placed on top of the scavenge air cooler, see Fig. 4.05.07.

Full water flow must be passed through the WHR element continuously when the engine is running. This must be considered in the layout of the steam feed water system (the WHR element supply heating). Refer to our 'WHR element specification' which is available from Everllence, Copenhagen.

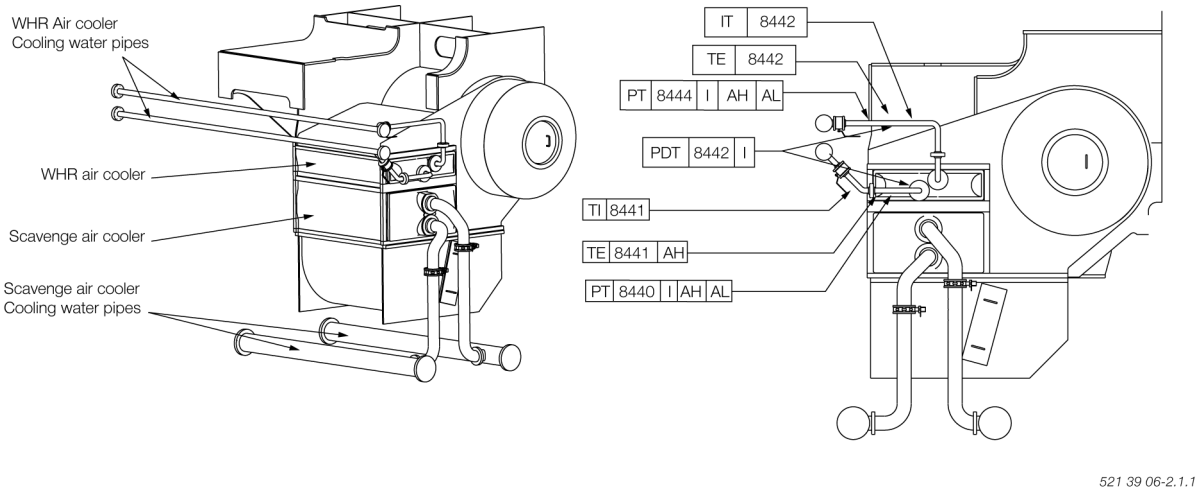

Fig. 4.05.07: WHR element on Scavenge air cooler

Safety valve and blow-Off

In normal operation, the temperature and pressure of the WHR element is in the range of 140-150°C and 8-21 bar respectively.

In order to prevent leaking components from causing personal injuries or damage to vital parts of the main engine, a safety relief valve will blow off excess pressure. The safety relief valve is connected to an external connection, 'W', see Fig. 4.05.08.

Connection 'W' must be passed to the funnel or another free space according to the class rules for steam discharge from safety valve.

As the system is pressurised according to class rules, the safety valve must be type approved.

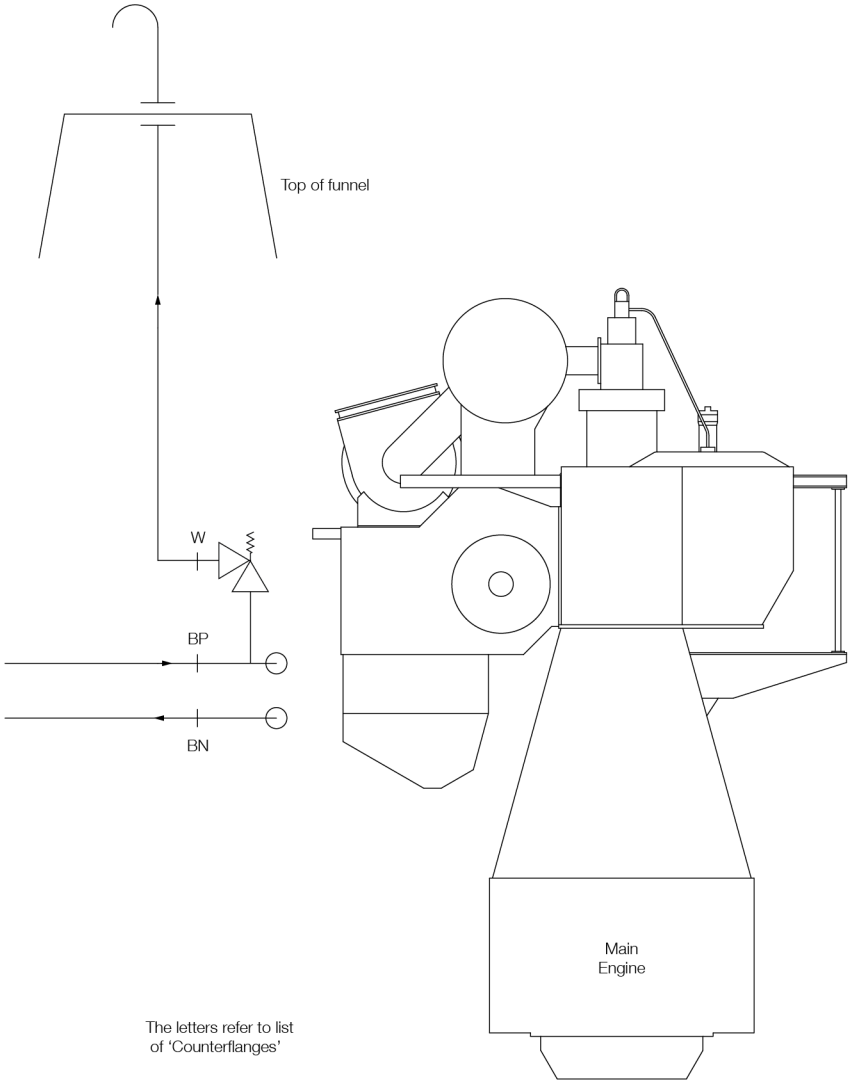

078 63 84-0.0.1

Fig. 4.05.08: WHR safety valve blow-off through connection 'W' to the funnel

2025-12-15 - en

L21/31 Mk. 2 GenSet data

Engine ratings

Engine type No of cylinders	900 rpm		1000 rpm	
	900 rpm	Available turning direction	1000 rpm	Available turning direction
	kW	CW [1]	kW	CW [1]
5L21/31	1000	Yes	1000	Yes
6L21/31	1320	Yes	1320	Yes
7L21/31	1540	Yes	1540	Yes
8L21/31	1760	Yes	1760	Yes
9L21/31	1980	Yes	1980	Yes
[1] CW clockwise				

Table 1: Engine ratings for emission standard

Dimensions

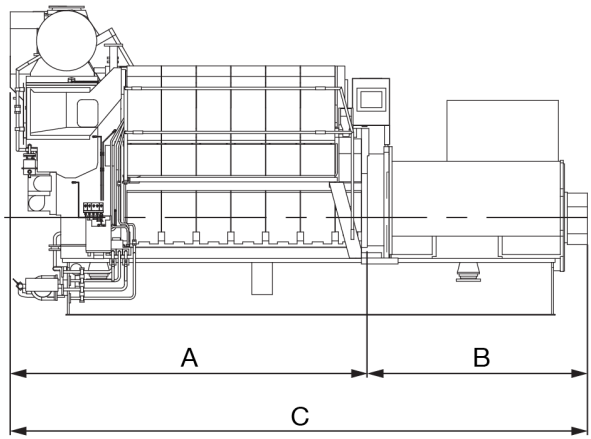

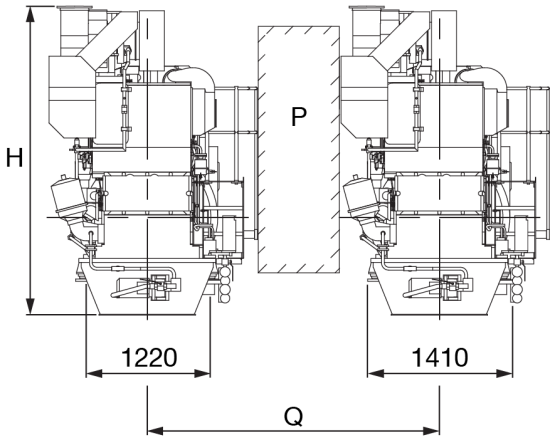

1 bearing

Cyl. no	A (mm)	* B (mm)	* C (mm)	H (mm)	** Dry weight GenSet (t)
5 (900 rpm)	3504	1995	5499	3074	22.2
5 (1000 rpm)	3504	1995	5499	3074	22.2
6 (900 rpm)	3859	2047	5906	3161	25.7
6 (1000 rpm)	3859	2047	5906	3161	25.7
7 (900 rpm)	4214	2027	6241	3161	29.2
7 (1000 rpm)	4214	2027	6241	3161	29.2

2 bearings

2024-04-26 - en

Cyl. no	A (mm)	* B (mm)	* C (mm)	H (mm)	** Dry weight GenSet (t)
5 (900 rpm)	3504	2545	6049	3074	22.2
5 (1000 rpm)	3504	2545	6049	3074	22.2
6 (900 rpm)	3859	2597	6456	3161	25.7
6 (1000 rpm)	3859	2597	6456	3161	25.7
7 (900 rpm)	4214	2577	6791	3161	29.2
7 (1000 rpm)	4214	2577	6791	3161	29.2
8 (900 rpm)	4569	2577	7146	3161	32.7
8 (1000 rpm)	4624	2577	7201	3267	32.7
9 (900 rpm)	4979	2657	7636	3267	36.2
9 (1000 rpm)	4979	2657	7636	3267	36.2

P Free passage between the engines, width 600 mm and height 2000 mm.
Q Min. distance between engines: 2500 mm (without gallery) and 2700 mm (with gallery)

* Depending on alternator
** Weight included a standard alternator

All dimensions and masses are approximate, and subject to changes without prior notice.

Capacities

5L: 200 kW/cyl 6-9L: 220 kW/cyl, 1-string		5	6	7	8	9	5	6	7	8	9
Speed - rpm		**900**					**1000**				
Engine output	kW	1000	1320	1540	1760	1980	1000	1320	1540	1760	1980
Heat to be dissipated [3)]											
Cooling water cylinder	kW	137	190	227	266	305	135	186	222	259	297
Charge air cooler, cooling water HT - Standard	kW	230	297	331	361	390	242	307	342	374	404
Charge air cooler, cooling water LT - Standard	kW	105	164	204	247	289	110	169	211	255	299
Charge air cooler, cooling water HT - PLO	kW	244	312	348	380	410	252	322	359	393	424
Charge air cooler, cooling water LT - PLO	kW	111	172	214	260	304	115	178	221	268	314
Lube oil cooler	kW	166	223	264	305	346	164	221	261	301	341
Heat readiation engine	kW	31	40	47	54	60	31	40	47	54	60
Air data											
	°C	246	246	247	248	248	246	246	247	248	248

2024-04-26 - en

5L: 200 kW/cyl 6-9L: 220 kW/cyl, 1-string		5	6	7	8	9	5	6	7	8	9
Speed - rpm		**900**					**1000**				
Charge air temp. At charge air cooler outlet, max.	°C	50	54	56	58	60	50	54	56	58	60
Air flow rate - Standard	kg/kWh [5]	5,5	5,8	5,8	5,8	5,8	5,8	6,0	6,0	6,0	6,0
Air flow rate - PLO	kg/kWh [5]	5,8	6,1	6,1	6,1	6,1	6,0	6,3	6,3	6,3	6,3
Charge air pressure	bar	4,5	4,2	4,2	4,2	4,2	4,4	4,1	4,1	4,1	4,1
Exhaust gas data [6]											
Mass flow - Standard	t/h [7]	5,7	7,9	9,2	10,6	11,9	6,0	8,2	9,5	10,9	12,3
Mass flow - PLO	t/h [7]	6,0	8,3	9,7	11,1	12,5	6,2	8,6	10,0	11,4	12,9
Temperature at turbine inlet	°C	581	583	586	588	589	579	581	584	586	587
Temperature at turbine outlet	°C	416	418	421	423	424	430	432	435	437	438
Heat content (190°C)	kW	382	539	638	735	831	427	593	701	808	913
Permissible exhaust back pressure	mbar	50	50	50	50	50	50	50	50	50	50
Permissible exhaust back pressure (SCR)	mbar	50	50	50	50	50	50	50	50	50	50
Pumps											
Engine driven pumps											
HT cooling water pump (1-2.5 bar)	m^3/h	55	55	55	55	55	61	61	61	61	61
LT cooling water pump (1-2.5 bar)	m^3/h	55	55	55	55	55	61	61	61	61	61
Lube oil (3-5 bar)	m^3/h	31	31	41	41	41	34	34	46	46	46
External flow (from engine to system) [4]											
LT/HT water flow	m^3/h	55	55	55	55	55	61	61	61	61	61
LT/HT water temperature	°C	52	56	59	61	64	50	53	55	57	59
External pumps [8]											
Diesel oil pump (at 4 bar at fuel oil inlet A1)	m^3/h	0,89	1,18	1,37	1,57	1,76	0,89	1,18	1,37	1,57	1,76
Fuel oil supply pump (4 bar discharge pressure)	m^3/h	0,30	0,39	0,46	0,52	0,59	0,30	0,39	0,46	0,52	0,59
Fuel oil circulating pump (8 bar at fuel oil inlet A1) [9]	m^3/h	0,89	1,18	1,37	1,57	1,76	0,89	1,18	1,37	1,57	1,76

2024-04-26 - en

5L: 200 kW/cyl 6-9L: 220 kW/cyl, 1-string		5	6	7	8	9	5	6	7	8	9
Speed - rpm		**900**					**1000**				
Starting air system											
Air consumption per start (10 bar starter)	Nm^3	1,0	1,2	1,4	1,6	1,8	1,0	1,2	1,4	1,6	1,8
Air consumption per start (30 bar air starter)	Nm^3	1,8	2,1	2,4	2,7	3,0	1,8	2,1	2,4	2,7	3,0
PLO = Part load optimised											

2024-04-26 - en

L23/30 Mk. 2 GenSet data

Engine ratings

Engine type No of cylinders	720 rpm		750 rpm		900 rpm	
	720 rpm	Available turning direction	750 rpm	Available turning direction	900 rpm	Available turning direction
	kW	CW [1]	kW	CW [1]	kW	CW [1]
5L23/30H Mk2 ECR	580	Yes	580	Yes	–	–
5L23/30H Mk2	710	Yes	740	Yes	–	–
6L23/30H Mk2	852	Yes	888	Yes	1050	Yes
7L23/30H Mk2	994	Yes	1036	Yes	1225	Yes
8L23/30H Mk2	1136	Yes	1184	Yes	1400	Yes
[1] CW clockwise						

Table 1: Engine ratings for emission standard IMO Tier II.

General

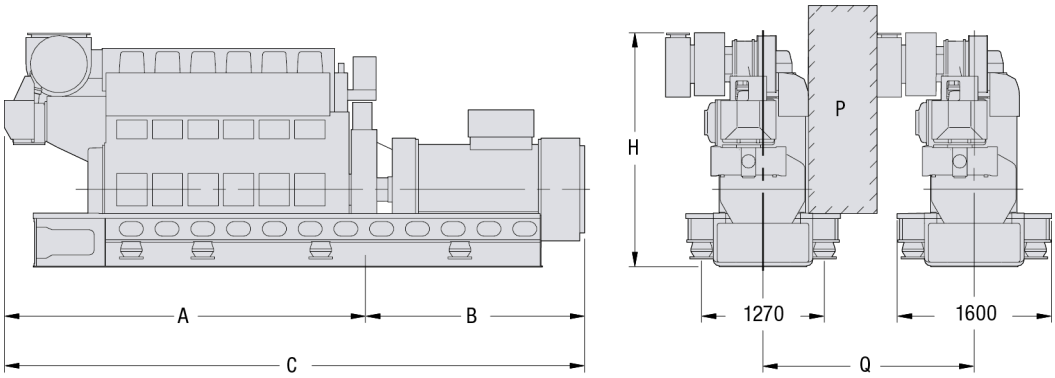

Cyl. no	A (mm)	* B (mm)	* C (mm)	H (mm)	** Dry weight GenSet (t)
5 (720 rpm)	3369	2155	5524	2402	18.0
5 (750 rpm)	3369	2155	5524	2402	17.6
6 (720 rpm)	3738	2265	6004	2402	19.7
6 (750 rpm)	3738	2265	6004	2402	19.7
6 (900 rpm)	3738	2265	6004	2466	21.0
7 (720 rpm)	4109	2395	6504	2466	21.4
7 (750 rpm)	4109	2395	6504	2466	21.4
7 (900 rpm)	4109	2395	6504	2466	22.8
8 (720 rpm)	4475	2480	6959	2466	23.5
8 (750 rpm)	4475	2480	6959	2466	22.9
8 (900 rpm)	4475	2340	6815	2466	24.5

2024-04-26 - en

P Free passage between the engines, width 600 mm and height 2000 mm.
Q Min. distance between engines: 2250 mm

* Depending on alternator
** Weight included a standard alternator

All dimensions and masses are approximate, and subject to changes without prior notice.

Capacities

5-8L23/30H Mk 2: 142 kW/Cyl., 720 rpm		5	6	7	8
Engine output	kW	710	852	994	1136
Speed	rpm	720	720	720	720
Heat to be dissipated [3]					
Cooling water cylinder	kW	217	262	302	347
Charge air cooler; cooling water HT (1 stage cooler: no HT-stage)	kW	-	-	-	-
Charge air cooler; cooling water LT	kW	351	407	505	563
Lubricating oil cooler	kW	67	81	94	107
Heat radiation engine	kW	30	36	42	48
Air data					
Charge air temp. at charge air cooler outlet, max.	°C	54	56	53	54
Air flow rate	m^3/h [5]	5430	6516	7602	8688
	kg/kWh	8.03	8.03	8.03	8.03
Charge air pressure	bar (abs)	3.39	3.40	3.39	3.39
Air required to dissipate heat radiation (eng.) (t_2-t_1=10°C)	m^3/h	9756	11708	13659	15610
Exhaust gas data [6]					
Volume flow (temperature turbocharger outlet)	m^3/h [7]	10086	12069	14138	16121
Mass flow	t/h	5.85	7.00	8.20	9.35
Temperature at turbine outlet	°C	324	325	323	324
Heat content (190°C)	kW	234	283	325	374
Permissible exhaust back pressure	mbar	< 30	< 30	< 30	< 30
Permissible exhaust back pressure (SCR)	mbar	< 50	< 50	< 50	< 50

2024-04-26 - en

5-8L23/30H Mk 2: 142 kW/Cyl., 720 rpm			5	6	7	8
Pumps						
Engine driven pumps [4]						
HT cooling water pump	1-2.5 bar	m^3/h	36	36	36	36
LT cooling water pump	1-2.5 bar	m^3/h	55	55	55	55
Lubrication oil	3-5 bar	m^3/h	16	16	16	16
External pumps [8]						
Diesel oil pump	4 bar at fuel oil inlet A1	m^3/h	0.52	0.62	0.73	0.83
Fuel oil supply pump	4 bar discharge pressure	m^3/h	0.26	0.31	0.36	0.41
Fuel oil circulating pump [9]	8 bar at fuel oil inlet A1	m^3/h	0.51	0.62	0.72	0.82
Cooling water pumps "Internal cooling water system 1"						
LT cooling water pump	1-2.5 bar	m^3/h	35	42	48	55
"Internal cooling water system 2"						
HT cooling water pump	1-2.5 bar	m^3/h	20	24	28	32
LT cooling water pump	1-2.5 bar	m^3/h	35	42	48	55
Lubricating oil pump	3-5 bar	m^3/h	14	15	16	17
Starting air system						
Air consumption per start (10 bar starter)		Nm^3	1.40	1.43	1.50	1.54

Capacities

5-8L23/30H Mk 2: 148 kW/Cyl., 750 rpm		5	6	7	8
Engine output	kW	740	888	1036	1184
Speed	rpm	750	750	750	750
Heat to be dissipated [3]					
Cooling water cylinder	kW	222	269	309	355
Charge air cooler; cooling water HT (1 stage cooler: no HT-stage)	kW	-	-	-	-
Charge air cooler; cooling water LT	kW	379	438	544	607
Lubricating oil cooler	kW	67	81	94	108
Heat radiation engine	kW	30	36	42	48
Air data					
Charge air temp. at charge air cooler outlet, max.	°C	55	57	54	55
Air flow rate	m^3/h [5]	5652	6783	7913	9044
	kg/kWh	8.02	8.02	8.02	8.02
Charge air pressure	bar (abs)	3.61	3.62	3.60	3.61
Air required to dissipate heat radiation (eng.) (t_2-t_1=10°C)	m^3/h	9756	11708	13659	15610
Exhaust gas data [6]					
Volume flow (temperature turbocharger outlet)	m^3/h [7]	10517	12586	14655	16724
Mass flow	t/h	6.10	7.30	8.50	9.70
Temperature at turbine outlet	°C	321	322	320	321
Heat content (190°C)	kW	237	287	329	379
Permissible exhaust back pressure	mbar	< 30	< 30	< 30	< 30
Permissible exhaust back pressure (SCR)	mbar	< 50	< 50	< 50	< 50

2024-04-26 - en

5-8L23/30H Mk 2: 148 kW/Cyl., 750 rpm			5	6	7	8
Pumps						
Engine driven pumps [4]						
HT cooling water pump	1-2.5 bar	m^3/h	36	36	36	36
LT cooling water pump	1-2.5 bar	m^3/h	55	55	55	55
Lubrication oil	3-5 bar	m^3/h	16	16	16	16
External pumps [8]						
Diesel oil pump	4 bar at fuel oil inlet A1	m^3/h	0.54	0.65	0.76	0.87
Fuel oil supply pump	4 bar discharge pressure	m^3/h	0.27	0.32	0.38	0.43
Fuel oil circulating pump [9]	8 bar at fuel oil inlet A1	m^3/h	0.54	0.65	0.75	0.86
Cooling water pumps "Internal cooling water system 1"						
LT cooling water pump	1-2.5 bar	m^3/h	35	42	48	55
"Internal cooling water system 2"						
HT cooling water pump	1-2.5 bar	m^3/h	20	24	28	32
LT cooling water pump	1-2.5 bar	m^3/h	35	42	48	55
Lubricating oil pump	3-5 bar	m^3/h	14	15	16	17
Starting air system						
Air consumption per start (10 bar starter)		Nm^3	1.40	1.43	1.50	1.54

Capacities

6-8L23/30H Mk 2: 175 kW/Cyl., 900 rpm		6	7	8
Engine output	kW	1050	1225	1400
Speed	rpm	900	900	900
Heat to be dissipated [3]				
Cooling water cylinder	kW	298	349	402
Charge air cooler; cooling water HT				
1 stage cooler: no HT-stage	kW	-	-	-
Charge air cooler; cooling water LT	kW	441	604	672
Lubricating oil cooler	kW	122	143	164
Heat radiation engine	kW	42	49	56
Air data				
Temp. of charge air at charge air cooler outlet, max.	°C	54	55	56
Air flow rate	m^3/h [5]	8020	9357	10693
	kg/kWh	8.02	8.02	8.02
Charge air pressure	bar (abs)	3.60	3.61	3.61
Air required to dissipate heat radiation (eng.) (t_2-t_1=10°C)	m^3/h	13669	15947	18225
Exhaust gas data [6]				
Volume flow (temperature turbocharger outlet)	m^3/h [7]	15636	18364	20909
Mass flow	t/h	8.60	10.10	11.50
Temperature at turbine outlet	°C	354	355	356
Heat content (190°C)	kW	423	497	571
Permissible exhaust back pressure	mbar	< 30	< 30	< 30
Permissible exhaust back pressure (SCR)	mbar	< 50	< 50	< 50

2024-04-26 - en

6-8L23/30H Mk 2: 175 kW/Cyl., 900 rpm			6	7	8
Pumps					
Engine driven pumps [4]					
HT cooling water pump	1-2.5 bar	m^3/h	45	45	45
LT cooling water pump	1-2.5 bar	m^3/h	69	69	69
Lubrication oil	3-5 bar	m^3/h	20	20	20
External pumps [8]					
Diesel oil pump	4 bar at fuel oil inlet A1	m^3/h	0.78	0.91	1.04
Fuel oil supply pump	4 bar discharge pressure	m^3/h	0.38	0.45	0.51
Fuel oil circulating pump [9]	8 bar at fuel oil inlet A1	m^3/h	0.77	0.90	1.03
Cooling water pumps					
"Internal cooling water system 1"					
LT cooling water pump	1-2.5 bar	m^3/h	52	61	70
"Internal cooling water system 2"					
HT cooling water pump	1-2.5 bar	m^3/h	30	35	40
LT cooling water pump	1-2.5 bar	m^3/h	52	61	70
Lubricating oil pump	3-5 bar	m^3/h	17	18	19
Starting air system					
Air consumption per start (10 bar starter)		Nm^3	1.43	1.50	1.54

2024-04-26 - en

This page is intentionally left blank

2024-04-26 - en

L23/30 Mk. 3 GenSet data

Engine ratings

Engine type No of cylinders	720 rpm		750 rpm		900 rpm	
	720 rpm	Available turning direction	750 rpm	Available turning direction	900 rpm	Available turning direction
	kW	CW [1]	kW	CW [1]	kW	CW [1]
5L23/30H Mk3 (ECR)	500	Yes	-	-	–	–
5L23/30H Mk3	850	Yes	885	Yes	-	-
6L23/30H Mk3	1020	Yes	1062	Yes	1200	Yes
7L23/30H Mk3	1190	Yes	1239	Yes	1400	Yes
8L23/30H Mk3	1360	Yes	1416	Yes	1600	Yes
9L23/30H Mk3	1530	Yes	1593	Yes	1800	Yes
[1] CW clockwise						

Table 1: Engine ratings for emission standard IMO Tier II.

Dimensions

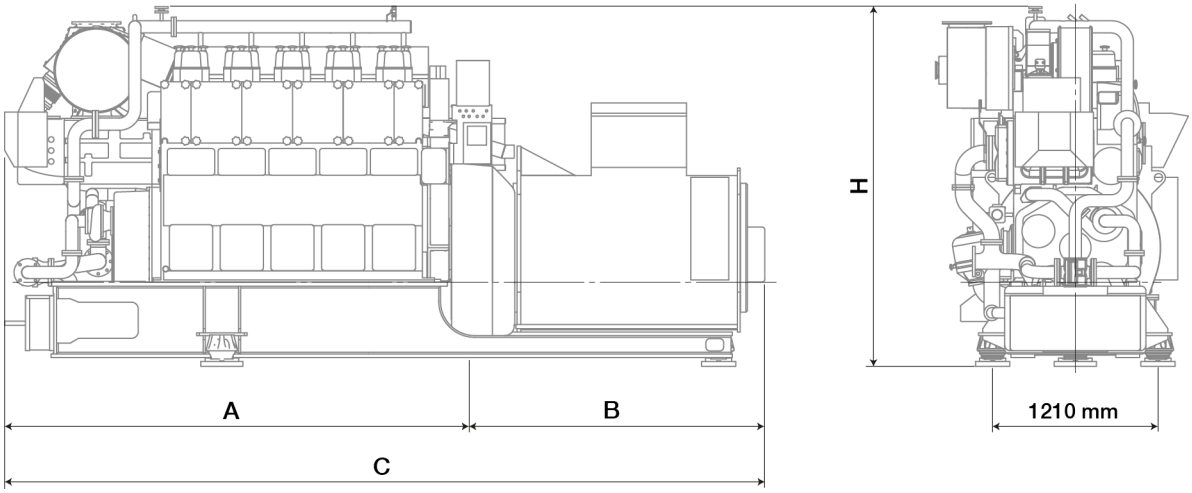

2024-04-26 - en

Cyl. no	A (mm)	B (mm)	* C (mm)	H (mm)	** Dry weight GenSet (t)
5 cyl. engine ECR, 720 rpm	3320	2262	5582	2381	16.8
5 cyl. engine, 720/750 rpm	3320	2262	5582	2446	16.8
6 cyl. engine, 720/750 rpm	3690	2254	5944	2446	18.4
6 cyl. engine, 900 rpm	3690	2254	5944	2516	18.6
7 cyl. engine, 720/750 rpm	4060	2254	6314	2496	20.7
7 cyl. engine, 900 rpm	4060	2254	6314	2566	20.7
8 cyl. engine, 720/750 rpm	4430	2314	6744	2566	22.5
8 cyl. engine, 900 rpm	4430	2314	6744	2731	22.6
9 cyl. engine, 720/750 rpm	4800	2294	7094	2566	24.5
9 cyl. engine, 900 rpm	4800	2294	7094	2731	24.5

Free passage between the engines, width 600 mm and height 2000 mm
Distance between engines - see page 2

* Depending on alternator
** Weight included a standard alternator

All dimensions and masses are approximate, and subject to change without prior notice.

Capacities

5-9L23/30H Mk3: 170 kW/cyl. 720 rpm (500 KW)		5	5	6	7	8	9
Engine output	kW	500	850	1020	1190	1360	1530
Speed	rpm	720	720	720	720	720	720
Heat to be dissipated [3]							
Cooling water cylinder	kW	153	260	314	362	415	466
Charge air cooler; cooling water HT (1 stage cooler: no HT-stage)	kW	-	-	-	-	-	-
Charge air cooler; cooling water LT	kW	247	420	487	605	674	766
Lubricating oil cooler	kW	47	80	97	113	128	144
Heat radiation engine	kW	21	36	43	50	57	65
Air data							
Charge air temp. at charge air cooler outlet, max.	°C	58	58	58	58	58	58
Air flow rate	m^3/h [5]	3824	6500	7801	9101	10401	11701
	kg/kWh	8.01	8.01	8.01	8.01	8.01	8.01
Charge air pressure	bar (abs)	2.7	3.9	3.9	3.9	3.9	3.9
Air required to dissipate heat radiation (eng.) (t_2-t_1=10°C)	m^3/h	6870	11680	14017	16352	18688	21024

2024-04-26 - en

5-9L23/30H Mk3: 170 kW/cyl. 720 rpm (500 KW)			5	5	6	7	8	9
Exhaust gas data [6]								
Volume flow (temperature turbocharger outlet)		m^3/h [7]	7103	12075	14449	16926	19299	21725
Mass flow		t/h	4.0	6.8	8.2	9.6	10.9	12.3
Temperature at turbine outlet		°C	342	342	342	342	342	342
Heat content (190°C)		kW	165	280	339	389	448	502
Permissible exhaust back pressure		mbar	< 30	< 30	< 30	< 30	< 30	< 30
Permissible exhaust back pressure (SCR)		mbar	< 50	< 50	< 50	< 50	< 50	< 50
Pumps								
Engine driven pumps [4]								
HT cooling water pump	1-2.5 bar	m^3/h	36	36	36	36	36	36
LT cooling water pump	1-2.5 bar	m^3/h	55	55	55	55	55	55
Lubrication oil	3-5 bar	m^3/h	16	16	16	16	16	16
External pumps [8]								
Diesel oil pump	4 bar fuel oil inlet A1	m^3/h	0.36	0.63	0.76	0.88	1.01	1.13
Fuel oil supply pump	4 bar discharge pressure	m^3/h	0.18	0.31	0.37	0.44	0.50	0.56
Fuel oil circulating pump [9]	8 bar fuel oil inlet A1	m^3/h	0.35	0.62	0.75	0.87	1.00	1.12
Cooling water pumps "Internal cooling water system 1"								
LT cooling water pump	1-2.5 bar	m^3/h	35	35	42	48	55	62
"Internal cooling water system 2"								
HT cooling water pump	1-2.5 bar	m^3/h	20	20	24	28	32	36
LT cooling water pump	1-2.5 bar	m^3/h	35	35	42	48	55	62
Lubricating oil pump	3-5 bar	m^3/h	14	14	15	16	17	18
Starting air system								
Air consumption per start (10 bar starter)		Nm^3	1.40	1.40	1.43	1.50	1.54	1.73

Capacities

5-9L23/30H Mk3: 177 kW/cyl. 750 rpm		5	6	7	8	9
Engine output	kW	885	1062	1239	1416	1593
Speed	rpm	750	750	750	750	750
Heat to be dissipated [3]						
Cooling water cylinder	kW	266	322	370	425	477
Charge air cooler; cooling water HT (1 stage cooler: no HT-stage)	kW	-	-	-	-	-
Charge air cooler; cooling water LT	kW	453	524	651	726	825
Lubricating oil cooler	kW	80	97	112	129	145
Heat radiation engine	kW	36	43	50	57	65
Air data						
Charge air temp. at charge air cooler outlet, max.	°C	58	58	58	58	58
Air flow rate	m^3/h [5]	6760	8112	9464	10816	12167
	kg/kWh	8.00	8.00	8.00	8.00	8.00
Charge air pressure	bar (abs)	3.9	3.9	3.9	3.9	3.9
Air required to dissipate heat radiation (eng.) (t_2-t_1=10°C)	m^3/h	11668	14002	16335	18669	21003

2024-04-26 - en

5-9L23/30H Mk3: 177 kW/cyl. 750 rpm			5	6	7	8	9
Exhaust gas data [6]							
Volume flow (temperature turbocharger outlet)		m^3/h [7]	12578	15052	17527	20001	22476
Mass flow		t/h	7.1	8.5	9.9	11.3	12.7
Temperature at turbine outlet		°C	342	342	342	342	342
Heat content (190°C)		kW	283	343	393	453	508
Permissible exhaust back pressure		mbar	< 30	< 30	< 30	< 30	< 30
Permissible exhaust back pressure (SCR)		mbar	< 50	< 50	< 50	< 50	< 50
Pumps							
Engine driven pumps [4]							
HT cooling water pump	1-2.5 bar	m^3/h	36	36	36	36	36
LT cooling water pump	1-2.5 bar	m^3/h	55	55	55	55	55
Lubrication oil	3-5 bar	m^3/h	16	16	16	16	16
External pumps [8]							
Diesel oil pump	4 bar fuel oil inlet A1	m^3/h	0.66	0.79	0.92	1.05	1.18
Fuel oil supply pump	4 bar discharge pressure	m^3/h	0.32	0.39	0.45	0.52	0.58
Fuel oil circulating pump [9]	8 bar fuel oil inlet A1	m^3/h	0.65	0.78	0.91	1.04	1.17
Cooling water pumps "Internal cooling water system 1"							
LT cooling water pump	1-2.5 bar	m^3/h	35	42	48	55	62
"Internal cooling water system 2"							
HT cooling water pump	1-2.5 bar	m^3/h	20	24	28	32	36
LT cooling water pump	1-2.5 bar	m^3/h	35	42	48	55	62
Lubricating oil pump	3-5 bar	m^3/h	14	15	16	17	18
Starting air system							
Air consumption per start (10 bar starter)		Nm^3	1.40	1.43	1.50	1.54	1.73

Capacities

6-8L23/30H Mk3: 200kW/cyl. 900 rpm		6	7	8	9
Engine output	kW	1200	1400	1600	1800
Speed	rpm	900	900	900	900
Heat to be dissipated [3]					
Cooling water cylinder	kW	341	399	459	518
Charge air cooler; cooling water HT					
1 stage cooler: no HT-stage	kW	-	-	-	-
Charge air cooler; cooling water LT	kW	504	690	768	918
Lubricating oil cooler	kW	139	163	187	211
Heat radiation engine	kW	48	56	64	72
Air data					
Temp. of charge air at charge air cooler outlet, max.	°C	58	58	58	58
Air flow rate	m^3/h [5]	9166	10693	12221	13749
	kg/kWh	8.00	8.00	8.00	8.00
Charge air pressure	bar (abs)	3.9	3.9	3.9	3.9
Air required to dissipate heat radiation (eng.) (t_2-t_1=10°C)	m^3/h	15621	18225	20828	23432

2024-04-26 - en

6-8L23/30H Mk3: 200kW/cyl. 900 rpm			6	7	8	9
Exhaust gas data [6]						
Volume flow (temperature turbocharger outlet)		m^3/h [7]	17870	20987	23896	26944
Mass flow		t/h	9.6	11.3	12.9	14.5
Temperature at turbine outlet		°C	371	371	371	371
Heat content (190°C)		kW	483	568	653	737
Permissible exhaust back pressure		mbar	< 30	< 30	< 30	< 30
Permissible exhaust back pressure (SCR)		mbar	< 50	< 50	< 50	< 50
Pumps						
Engine driven pumps [4]						
HT cooling water pump	1-2.5 bar	m^3/h	45	45	45	45
LT cooling water pump	1-2.5 bar	m^3/h	69	69	69	69
Lubrication oil	3-5 bar	m^3/h	20	20	20	20
External pumps [8]						
Diesel oil pump	4 bar at fuel oil inlet A1	m^3/h	0.91	1.06	1.22	1.37
Fuel oil supply pump	4 bar discharge pressure	m^3/h	0.45	0.53	0.60	0.68
Fuel oil circulating pump [9]	8 bar at fuel oil inlet A1	m^3/h	0.90	1.05	1.20	1.35
Cooling water pumps "Internal cooling water system 1"						
LT cooling water pump	1-2.5 bar	m^3/h	52	61	70	79
"Internal cooling water system 2"						
HT cooling water pump	1-2.5 bar	m^3/h	30	35	40	45
LT cooling water pump	1-2.5 bar	m^3/h	52	61	70	79
Lubricating oil pump	3-5 bar	m^3/h	17	18	19	20
Starting air system						
Air consumption per start (10 bar starter)		Nm^3	1.43	1.50	1.54	1.73

2024-04-26 - en

This page is intentionally left blank

2024-04-26 - en

L27/38 GenSet data

Engine ratings

Engine type No of cylinders	720 rpm		750 rpm		720/750 MGO	
	720 rpm	Available turning direction	750 rpm	Available turning direction	720/750 rpm	Available turning direction
	kW	CW [1]	kW	CW [1]	kW	CW [1]
5L27/38	1500	Yes	1600	Yes	–	–
6L27/38	1980	Yes	1980	Yes	2100	Yes
7L27/38	2310	Yes	2310	Yes	2450	Yes
8L27/38	2640	Yes	2640	Yes	2800	Yes
9L27/38	2970	Yes	2970	Yes	3150	Yes
[1] CW clockwise						

Table 1: Engine ratings for emission standard - IMO Tier II.

General

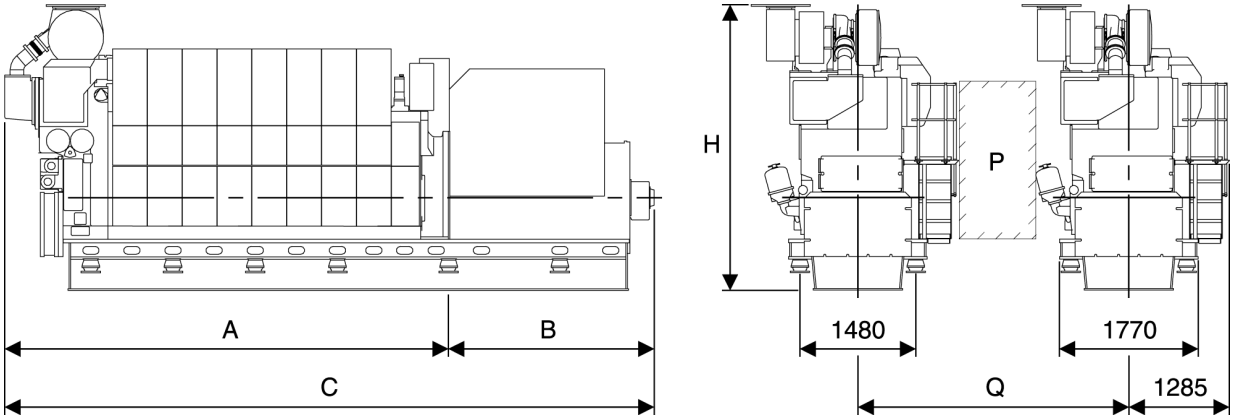

Cyl. no	A (mm)	* B (mm)	* C (mm)	H (mm)	** Dry weight GenSet (t)
5 (720 mm)	4346	2486	6832	3712	40.0
5 (750 mm)	4346	2486	6832	3712	40.0
6 (720 mm)	4791	2766	7557	3712	44.5
6 (750 mm)	4791	2766	7557	3712	44.5
7 (720 mm)	5236	2766	8002	3899	50.4
7 (750 mm)	5236	2766	8002	3899	50.4
8 (720 mm)	5681	2986	8667	3899	58.2
8 (750 mm)	5681	2986	8667	3899	58.2
9 (720 mm)	6126	2986	9112	3899	64.7
9 (750 mm)	6126	2986	9112	3899	64.7

2024-04-26 - en

P Free passage between the enginges, width 600 mm and height 2000 mm.
Q Min. distance between engines: 2900 mm (without gallery) and 3100 mm (with gallery)

* Depending on alternator
** Weight included a standard alternator

All dimensions and masses are approximate, and subject to changes without prior notice.

Capacities

5L27/38: 300 kW/cyl., 720 rpm, 6-9L27/38: 330 kW/cyl., 720 rpm		5	6	7	8	9
Engine output	kW	1500	1980	2310	2640	2970
Speed	rpm	720	720	720	720	720
Heat to be dissipated [3]						
Cooling water cylinder	kW	256	330	385	440	495
Charge air cooler; cooling water HT	kW	466	594	675	750	820
Charge air cooler; cooling water LT	kW	178	216	242	268	297
Lubricating oil cooler	kW	224	279	325	372	418
Heat radiation engine	kW	63	83	97	111	125
Flow rates [4]						
Internal (inside engine)						
HT circuit (cylinder + charge air cooler HT stage)	m^3/h	58	58	58	58	58
LT circuit (lube oil + charge air cooler LT stage)	m^3/h	58	58	58	58	58
Lubrication oil	m^3/h	64	64	92	92	92
External (from engine to system)						
HT water flow (at 40°C inlet)	m^3/h	16	20.2	23	25.5	28
LT water flow (at 38°C inlet)	m^3/h	58	58	58	58	58
Air data						
Temperature of charge air at charge air cooler outlet	°C	50	53	55	56	57
Air flow rate	m^3/h [5]	9137	12061	14071	16082	18092
	kg/kWh	6.67	6.67	6.67	6.67	6.67
Charge air pressure	bar	4.01	4.01	4.01	4.01	4.01
Air required to dissipate heat radiation (eng.) (t_2-t_1= 10°C)	m^3/h	20414	26895	31431	35968	40504
Exhaust gas data [6]						
Volume flow (temperature turbocharger outlet)	m^3/h [7]	19203	25348	29572	33797	38021
Mass flow	t/h	10.3	13.6	15.9	18.1	20.4
Temperature at turbine outlet	°C	376	376	376	376	376
Heat content (190°C)	kW	575	759	886	1012	1139
Permissible exhaust back pressure	mbar	< 30	< 30	< 30	< 30	< 30
Permissible exhaust back pressure (SCR)	mbar	< 50	< 50	< 50	< 50	< 50
Pumps						
External pumps [8]						
Diesel oil pump (5 bar at fuel oil inlet A1)	m^3/h	1.06	1.40	1.63	1.87	2.10
Fuel oil supply pump (4 bar discharge pressure)	m^3/h	0.51	0.67	0.79	0.90	1.01
Fuel oil circulating pump [9] (8 bar at fuel oil inlet A1)	m^3/h	1.06	1.40	1.63	1.87	2.10
Starting air data						
Air consumption per start, incl. air for jet assist (IR/TDI)	Nm^3	2.5	2.9	3.3	3.8	4.3

2024-04-26 - en

Capacities

5L27/38: 320 kW/cyl., 750 rpm, 6-9L27/38: 330 kW/cyl., 750 rpm		5	6	7	8	9
Engine output	kW	1600	1980	2310	2640	2970
Speed	rpm	750	750	750	750	750
Heat to be dissipated [3]						
Cooling water cylinder	kW	263	330	385	440	495
Charge air cooler; cooling water HT	kW	488	587	666	741	811
Charge air cooler; cooling water LT	kW	194	225	252	280	307
Lubricating oil cooler	kW	230	279	325	372	418
Heat radiation engine	kW	67	83	97	111	125
Flow rates [4]						
Internal (inside engine)						
HT circuit (cylinder + charge air cooler HT stage)	m^3/h	69	69	69	69	69
LT circuit (lube oil + charge air cooler LT stage)	m^3/h	69	69	69	69	69
Lubrication oil	m^3/h	66	66	96	96	96
External (from engine to system)						
HT water flow (at 40°C inlet)	m^3/h	16.8	20.3	23	25.7	28.2
LT water flow (at 38°C inlet)	m^3/h	69	69	69	69	69
Air data						
Temperature of charge air at charge air cooler outlet	°C	51	53	55	56	57
Air flow rate	m^3/h [5]	9951	12314	14367	16419	18472
	kg/kWh	6.81	6.81	6.81	6.81	6.81
Charge air pressure	bar	4.04	4.04	4.04	4.04	4.04
Air required to dissipate heat radiation (eng.) (t_2-t_1= 10°C)	m^3/h	21710	26895	31431	35968	40504
Exhaust gas data [6]						
Volume flow (temperature turbocharger outlet)	m^3/h [7]	20546	25426	29664	33901	38139
Mass flow	t/h	11.2	13.9	16.2	18.5	20.8
Temperature at turbine outlet	°C	365	365	365	365	365
Heat content (190°C)	kW	589	729	850	972	1093
Permissible exhaust back pressure	mbar	< 30	< 30	< 30	< 30	< 30
Permissible exhaust back pressure (SCR)	mbar	< 50	< 50	< 50	< 50	< 50
Pumps						
External pumps [8]						
Diesel oil pump (5 bar at fuel oil inlet A1)	m^3/h	1.13	1.40	1.63	1.87	2.10
Fuel oil supply pump (4 bar discharge pressure)	m^3/h	0.54	0.67	0.79	0.90	1.01
Fuel oil circulating pump [9] (8 bar at fuel oil inlet A1)	m^3/h	1.13	1.40	1.63	1.87	2.10
Starting air data						
Air consumption per start, incl. air for jet assist (IR/TDI)	Nm^3	2.5	2.9	3.3	3.8	4.3

This page is intentionally left blank

2024-04-26 - en

L27/38 Mk. 2 GenSet data

General

This section is available on request

2025-12-17 - en

This page is intentionally left blank

01 Engine Design
02 Engine Layout and Load Diagrams, SFOC, dot 5
03 Turbocharger Selection & Exhaust Gas Bypass
04 Electricity Production
05 Installation Aspects
06 List of Capacities: Pumps, Coolers & Exhaust Gas
07 Fuel
08 Lubricating Oil
09 Cylinder Lubrication
10 Piston Rod Stuffing Box Drain Oil
11 Low-temperature Cooling Water
12 High-temperature Cooling Water
13 Starting and Control Air
14 Scavenge Air
15 Exhaust Gas
16 Engine Control System
17 Vibration Aspects
18 Monitoring Systems and Instrumentation
19 Dispatch Pattern, Testing, Spares and Tools
20 Project Support and Documentation
21 Appendix

This page is intentionally left blank

Space requirements and overhaul

General

The latest versions of the installation drawings in this section are available for download at www.everllence.com*--> 'Marine' --> 'Planning tools and downloads' --> Installation drawings'. Specify the engine and accept the 'Conditions for use' before clicking on 'Download Drawings'.*

Space requirements for the engine

The space requirements stated in Section 5.02 are valid for engines rated at nominal maximum continuous rating (MCR) (L1).

If, the outer dimensions of the turbocharger cause problems during the project stage, it is possible for the same number of cylinders to use turbochargers with smaller dimensions by increasing the indicated number of turbochargers by one, see Section 3.01.

Overhaul of engine

The distances stated from the centre of the crankshaft to the crane hook are for the normal lifting procedure and the reduced height lifting procedure (involving tilting of main components). Fig. 5.04.01 provides the lifting capacity of a normal engine room crane.

The area covered by the engine room crane must be wide enough to reach any heavy spare part required in the engine room.

Note that for a double-jib crane, the distance 'H3/H4' (whichever is applicable) in Fig. 5.02.01 is from the centre of the crankshaft to the lower edge of the deck beam.

A special crane beam for dismantling the turbocharger must be fitted. Section 5.03 states the lifting capacity of the crane beam for dismantling the turbocharger.

The overhaul tools for the engine are designed to be used with a crane hook according to DIN 15400, June 1990, material class M and load capacity 1Am, and dimensions of the single hook type according to DIN 15401, part 1.

The total length of the engine at the crankshaft level may vary depending on the equipment to be fitted on the fore end of the engine, such as adjustable counterweights, tuning wheel, moment compensators or PTO.

2026-03-25 - en

This page is intentionally left blank

2026-03-25 - en

Space requirement

This section describes engine space requirements with turbocharger(s) mounted on the exhaust side.

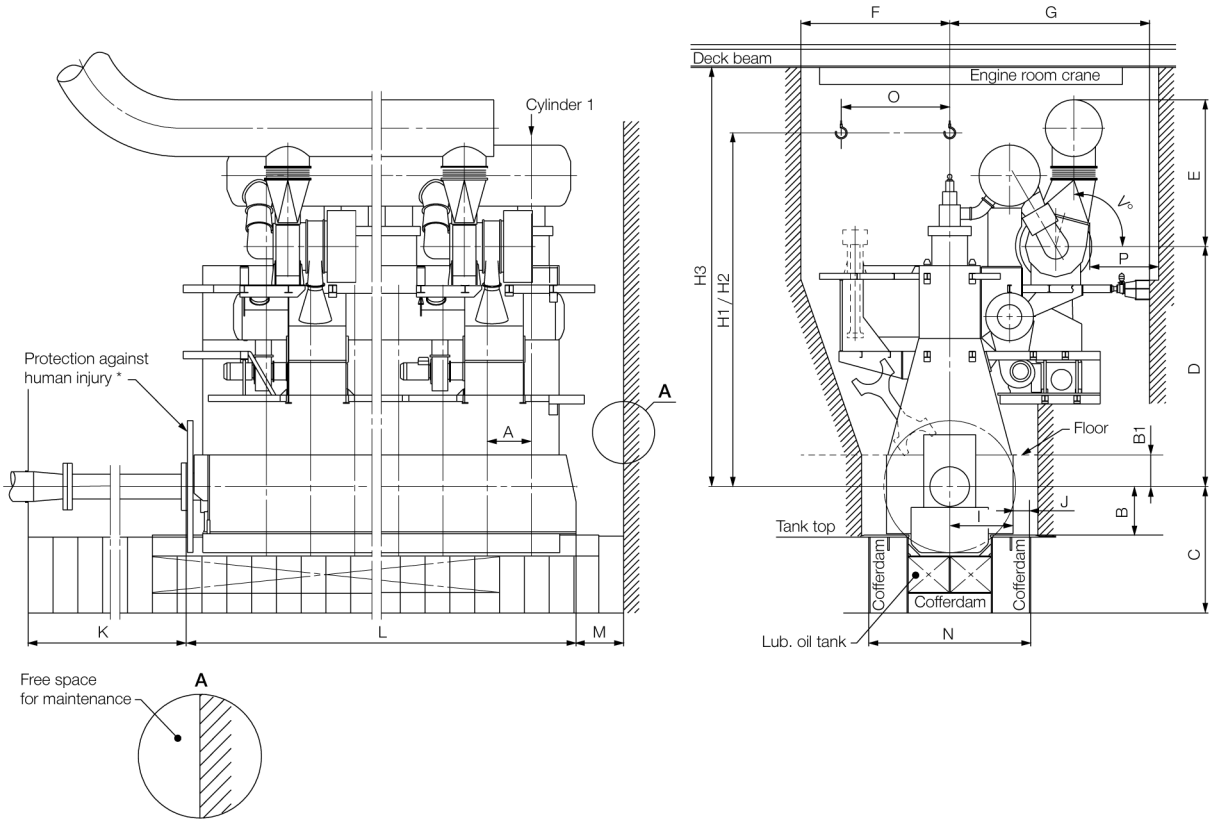

515 90 52-7.4.1

* To avoid human injury from the rotating turning wheel, the turning wheel has to be shielded or the access protected (yard supply).

Fig. 5.02.01: Space requirement for the engine, turbocharger(s) mounted on the exhaust side

The minimum access clearance around the engine required for an escape route is 600 mm.

The dimensions indicated on Fig. 5.02.01 are given in mm in Table 5.02.01 for guidance only. If the dimensions cannot be fulfilled, contact Everllence or our local representative.

5.02 Space requirement

Dimensions of exhaust side

Cylinder No.	5	6		
A	1,044		Cylinder distance. See drawing 'Outline drawing'	
B	1,800		Distance from crankshaft centre line to foundation. See drawing ‘Engine seating’	
B1	800		Distance from crankshaft centre line to floor. See drawing ‘Outline drawing’	
C	4,217	4,272	The dimension includes a cofferdam of 600 mm and must fulfil minimum height to tank top according to classification rules. See drawing ‘Lub. oil bottom tank’	
D *)	8,487	8,487	Everllence TCA/TCR/TCT	Dimensions according to turbocharger choice at nominal MCR in Tier II mode. See drawing 'Outline drawing' for the specified dimensions in Tier II or III mode.
	8,072	8,072	Accelleron A100/A200	
	8,202		MHI MET	
E *)	See text		Height of exhaust pipe is according to engine room design.	
F	See text		See drawing: ‘Engine Top Bracing’, if top bracing fitted on camshaft side	
G	5,712	5,712	Everllence TCA/TCR/TCT	The required space to the engine room casing includes mechanical top bracing. Dimensions according to turbocharger choice at nominal MCR in Tier II mode. See drawing ‘Top bracing’ for the specified dimensions in Tier II or III mode.
	5,712	5,712	Accelleron A100/A200	
	5,712		MHI MET	
H1 *)	DI/GI=13,625 / GA=13,800		Minimum overhaul height, normal lifting procedure. See drawing ‘Engine room crane’	
I	2,235		Length from crankshaft centre line to outer side bedplate. See drawing ‘Engine seating’	
J	460		Space for tightening control of holding down bolts. See drawing ‘Engine seating’	
K	See text		K must be equal to or larger than the propeller shaft, if the propeller shaft is to be drawn into the engine room	
L *)	8,387	9,192	Minimum length of a basic engine, without 2nd order moment compensators. See drawing 'Outline drawing'	
M	≈ 800		Free space in front of engine	
N	5,462		Distance between outer foundations girders. See drawing ‘Engine seating’	
O	2,600		Minimum crane operation area. See drawing 'Outline drawing'	
P	See text		See drawing ‘Crane beam for Turbocharger’ for overhaul of turbocharger	

Cylinder No.	5	6	
Q	See text		Recommended crane operation area. See drawing 'Outline drawing'
V	0°, 15°, 30°, 45°, 60°, 75°, 90°		Maximum 30° when engine room has minimum headroom above the turbocharger

593 97 21-9.2.0

*) The minimum **engine room crane** height is i.e. dependent on the choice of crane, see the actual heights 'H1'
The minimum **engine room** height is dependent on 'H1' or 'E+D'.
Maximum length of engine see the engine outline drawing.
Length of engine with PTO see corresponding space requirement.

Table 5.02.01: Space requirement for the engine, turbocharger(s) mounted on the exhaust side

5.02 Space requirement

This page is intentionally left blank

Crane beam requirements - turbocharger and air cooler

General

If the travelling area of the engine room crane covers the area recommended in the engine room crane drawing in Fig. 5.04.01, crane beams for overhauling the turbocharger can be omitted. If not, a crane beam with trolleys is required at each end of the turbocharger(s).

Crane beam and trolleys

Two trolleys must be available at the compressor end and one trolley is needed at the gas inlet end:

- Crane beam no. 1 is for dismantling of turbocharger components
- Crane beam no. 2 is for transporting turbocharger components

as indicated in Figs. 5.03.01 and 5.03.02.

Lifting capacity

The crane beams are dimensioned and used for lifting the following components:

- Exhaust gas inlet casing
- Air cooler
- Turbocharger inlet silencer
- Compressor casing
- Turbine rotor with bearings.

The crane beams should be placed close to the turbocharger so that the components around the gas outlet casing can be removed when overhauling the turbocharger.

The crane beam can be bolted to brackets that are fastened to the ship structure, or to columns that are located on the top platform of the engine.

The lifting capacity of the crane beam, which is specified by the heaviest component ‘W’, is indicated in table 5.03.01 for the different turbocharger makes and types.

The crane beam must be dimensioned for lifting the weight ‘W’ with a deflection of only 5 mm.

2026-04-09 - en

Relative position of the crane hook

On Fig. 5.03.01, the dimension 'HB' is given with the crane hook in the vertical plane in the centre of the turbocharger. 'HB' and 'b' also specify the minimum space for dismantling the turbocharger.

For engines with the turbocharger(s) located on the exhaust side, the letter ‘a’ indicates the distance between the vertical centreline of the engine and the turbocharger.

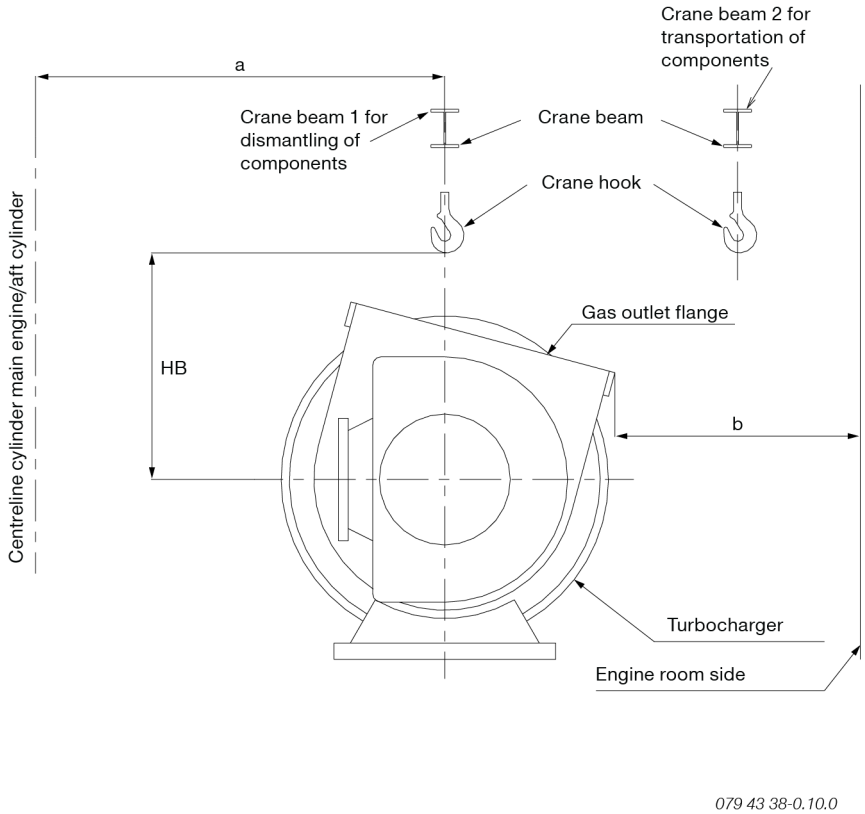

Fig. 5.03.01: Required distances for dismantling the turbocharger

The figures ‘a’ are stated in the ‘Engine and gallery outline’ drawing, Section 5.06.

Everllence

Turbocharger	W kg	HB mm	b mm
TCR18	1,500	760	500
TCR20	1,500	1,000	500
TCR22	1,500	1,200	500
TCA44	1,000	1,200	500
TCA55	1,000	1,384	600
TCA66	1,200	1,608	700
TCA77	2,000	1,700	800

2026-04-09 - en

Turbocharger	W kg	HB mm	b mm
TCA88	3,080	2,040	1,000
TCT30	500	1,200	700
TCT40	500	1,300	800
TCT50	750	1,450	900
TCT60	1,000	1,600	1,000
TCT70	1,500	1,750	1,100
TCT80	2,000	1,950	1,250

Accelleron

Turbocharger	W kg	HB mm	b mm
A165-L	750	1,250	800
A170-L	1,000	1,450	950
A175-L	1,470	1,750	1,100
A180-L	1,950	2,000	1,250
A185-L	2,550	2,200	1,400
A255-L	530	1,025	700
A260-L	530	1,200	700
A265-L	750	1,475	800
A270-L	1,000	1,750	950
A275-L	1,470	2,000	1,100
A280-L	1,950	2,225	1,250

MHI

Turbocharger	W kg	HB mm	b mm
MET18	1,000	1,000	500
MET22	1,000	1,000	500
MET26	1,000	1,500	500
MET30	1,000	1,500	500
MET33	1,000	1,500	600
MET37	1,000	1,500	600
MET42	1,000	1,500	600
MET48	1,000	1,500	700
MET53	1,000	1,500	700
MET60	1,000	1,600	700
MET66	1,500	1,800	800

2026-04-09 - en

Turbocharger	W kg	HB mm	b mm
MET71	1,800	1,800	800
MET83	2,700	2,000	1,000
MET90	3,500	2,200	1,000

079 43 38-0.9.0b

Table 5.03.01: Required distances for dismantling the turbocharger and weight of the turbocharger

2026-04-09 - en

Crane beam for turbochargers

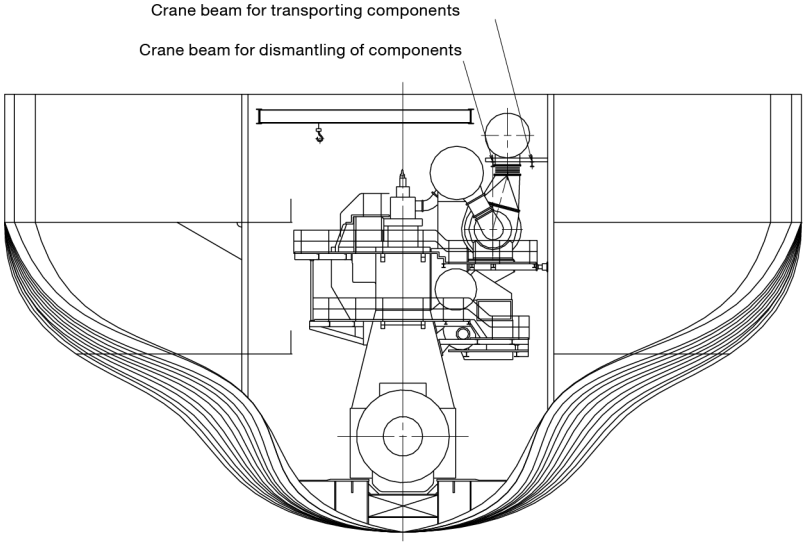

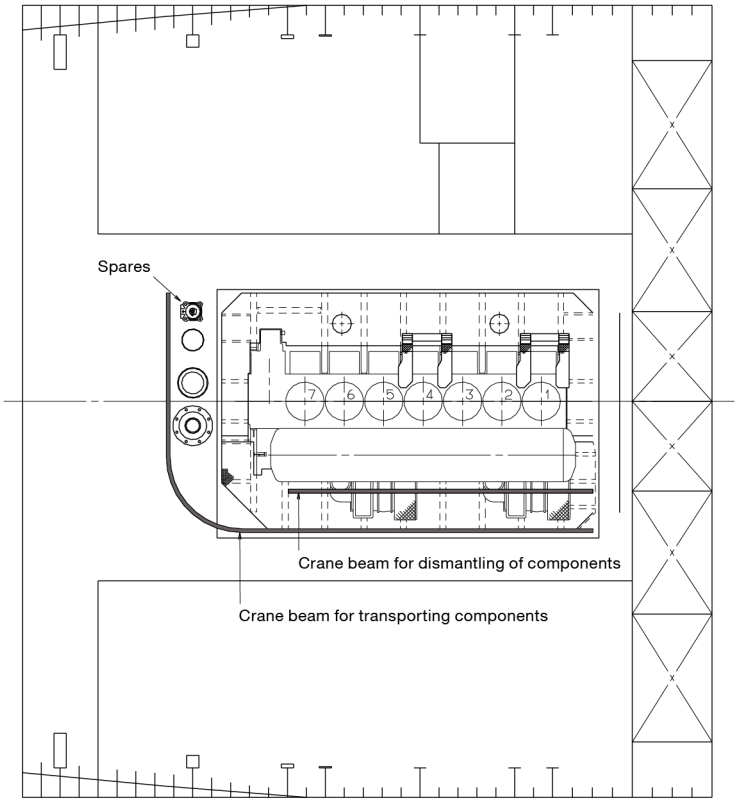

079 43 38-0.7.0c

Fig. 5.03.02: Crane beam for turbocharger

2026-04-09 - en

5.03 Crane beam requirements - turbocharger and air cooler

2026-04-09 - en

Engine room cranes - requirements and applications

General

This section is available on request

2026-01-23 - en

This page is intentionally left blank

Engine outline, galleries and pipe connections

Engine outline

The total length of the engine at crankshaft level may vary depending on the equipment fitted on the fore end of the engine, such as adjustable counterweights, tuning wheel, moment compensators, or PTO.

Engine masses and centre of gravity

The centre of gravity is shown in sections 5.07 for Tier III and Tier II engines, in both cases including water and oil in the engine, but without moment compensators or PTO. Partial and total engine masses are provided in Section 19.04 'Dispatch Pattern', to which the masses of water and oil in the engine (Section 5.08) should be added.

Gallery outline

Section 5.06 shows the gallery outline for engines rated at nominal MCR (L1).

Engine pipe connections

Section 5.09 states the positions of the external pipe connections on the engine, and Section 5.10 gives the corresponding lists of counterflanges for pipes and turbocharger.

2026-04-15 - en

This page is intentionally left blank

2026-04-15 - en

Engine and gallery outline - TII

General

This section is available on request

2026-01-23 - en

This page is intentionally left blank

Centre of gravity - TII

General

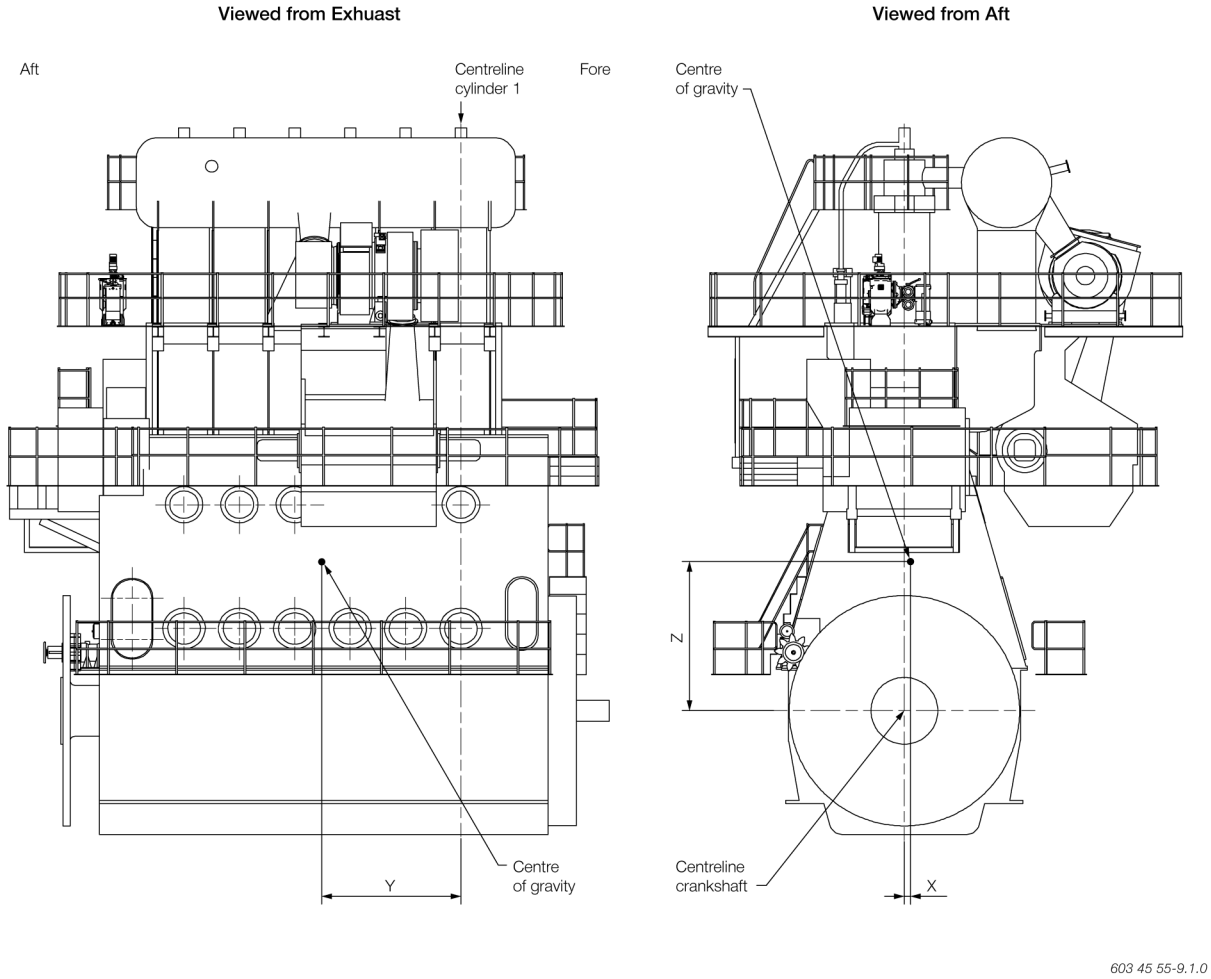

Fig. 5.07.01: Centre of gravity

Distances and engine configurations: T-II

No. of cylinders	5	6
Distance X mm	Available on request	130
Distance Y mm		2,624
Distance Z mm		2,815
DMT *)		589
Engine configuration:		
Engine divided	Available on request	N/A
TC configuration		1×MET66MB
Chain case position - Center		N/A
Chain case position - Aft		With
2nd order moment compensator Fore		With
2nd order moment compensator Aft		With
Tuning wheel		1,20,000 Kgm^2
Turning wheel		40,000 Kgm^2
TVD		N/A
EGR High sulphur		N/A
EGR Low sulphur		N/A
EGR Configuration		N/A
Waste heat recovery system		N/A
Cooler type		1×LKMX-C2/2201
Electrical driven HPS		N/A
Engine driven HPS		With

603 45 55-9.1.0

All values stated are approximate.
Data for engines with a different engine configuration is available on request.

Table 5.07.01: 6G70ME-C10.5, Centre of gravity, turbocharger(s) mounted on the exhaust side

This page is intentionally left blank

Centre of gravity - TIII

General

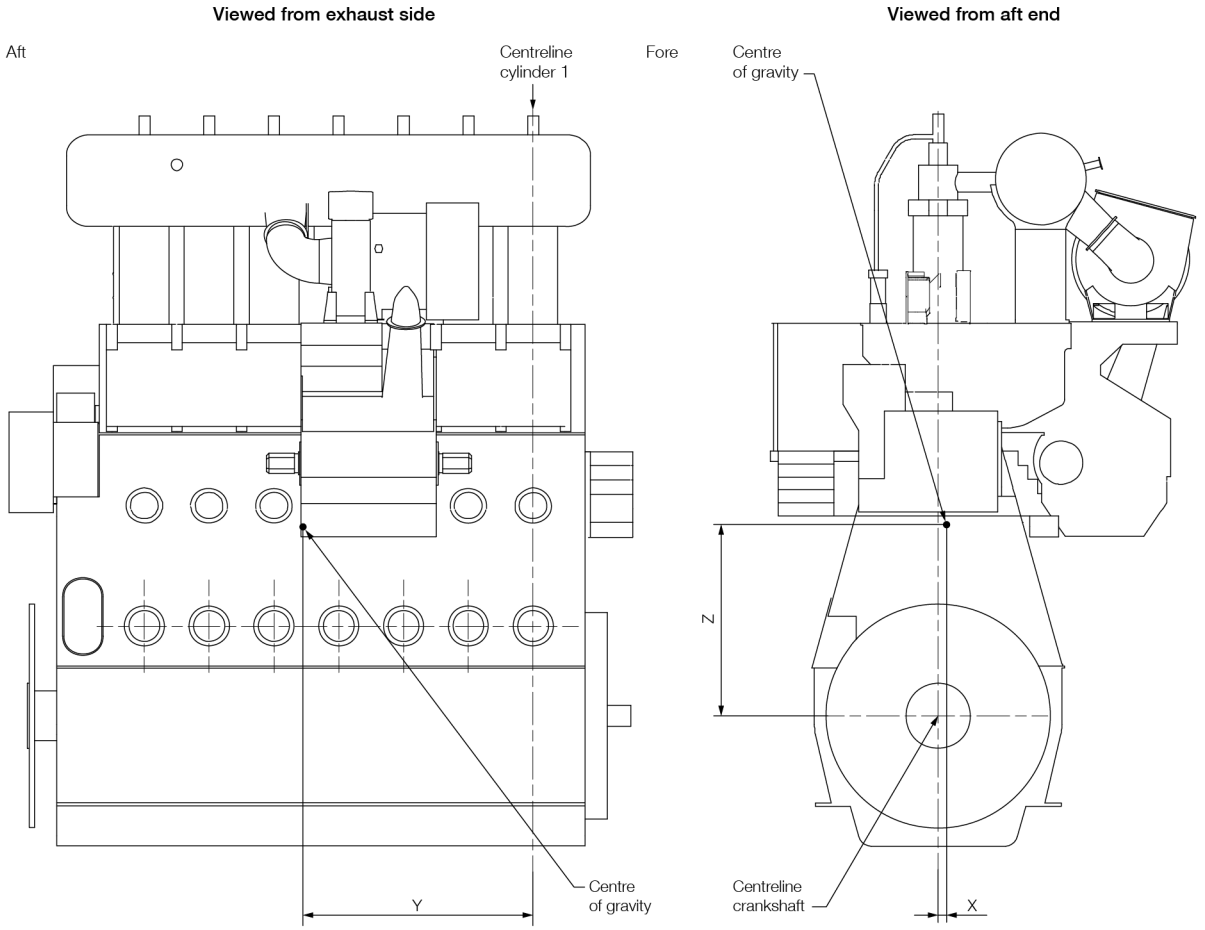

Note: This graphic is for information purpose only. Engine configuration may vary.

178 70 97-2.0.0a

Fig. 5.07.01: Centre of gravity

Distances and engine configurations: EGRBP

No. of cylinders	5	6
Distance X mm	205	206
Distance Y mm	2,185	2,939
Distance Z mm	2,857	3,017
DMT *)	555	557
Engine configuration:		
Engine divided	NA	NA
TC configuration	1×MET60MB	1×MET60MB
Chain case position - Center	NA	NA
Chain case position - Aft	With	With
2nd order moment compensator Fore	With	With
2nd order moment compensator Aft	With	With
Tuning wheel	1,00,000 Kgm^2	NA
Turning wheel	39,400 Kgm^2	40,000 Kgm^2
TVD	NA	With
EGR High sulphur	NA	NA
EGR Low sulphur	With	With
EGR Configuration	1×RTU24 1×Siemens-EGR-10	1×RTU24 1×Siemens EGR10
Waste heat recovery system	NA	NA
HPSCR	NA	NA
Cooler type	1×LKMX-C2/1634 1×EGR-D2/1084	1×LKMX-C2/2201
Electrical driven HPS	NA	NA
Engine driven HPS	With	With

592 35 27-8.0.0 / 605 48 95-8.0.0

All values stated are approximate.
Data for engines with a different engine configuration is available on request.

Table 5.07.01: G70ME-C10.5-EGRBP, Centre of gravity, turbocharger(s) mounted on the exhaust side

Distances and engine configurations: HPSCR

No. of cylinders	5	6
Distance X mm	Available on request	160
Distance Y mm		2,535
Distance Z mm		2,774
DMT *)		610
Engine configuration:		
Engine divided	Available on request	NA
TC configuration		1×A175-L
Chain case position - Center		NA
Chain case position - Aft		With
2nd order moment compensator Fore		With
2nd order moment compensator Aft		With
Tuning wheel		1,60,000 Kgm^2
Turning wheel		40,000 Kgm^2
TVD		NA
Waste heat recovery system		NA
HPSCR		With
Cooler type		1×LKMX-C2/2201
Electrical driven HPS		NA
Engine driven HPS		With

631 09 58-9.0.0

All values stated are approximate.
Data for engines with a different engine configuration is available on request.

Table 5.07.02: G70ME-C10.5-HPSCR, Centre of gravity, turbocharger(s) mounted on the exhaust side

Distances and engine configurations: LPSCR

No. of cylinders	5	6
Distance X mm	152	135
Distance Y mm	2,344	2,761
Distance Z mm	2,844	2,952
DMT *)	510	552
Engine configuration:		
Engine divided	NA	NA
TC configuration	1×MET66MB	1×MET66MB
Chain case position - Center	NA	NA
Chain case position - Aft	With	With
2nd order moment compensator Fore	With	NA
2nd order moment compensator Aft	With	With
Tuning wheel	Available on request	85,000 Kgm^2
Turning wheel	39,283 Kgm^2	15,000 Kgm^2
TVD	NA	NA
EGR High sulphur	NA	NA
EGR Low sulphur	NA	NA
Waste heat recovery system	NA	NA
HPSCR	NA	NA
LPSCR	With	With
Cooler type	1×LKMX-C2/2201	1×LKMX-C2/2201
Electrical driven HPS	NA	NA
Engine driven HPS	With	With

632 40 42-4.0.0/ 606 11 78-2.0.0

All values stated are approximate.
Data for engines with a different engine configuration is available on request.

Table 5.07.03: G70ME-C10.5-LPSCR, Centre of gravity, turbocharger(s) mounted on the exhaust side

This page is intentionally left blank

Water and oil calculation - TII

Masses and engine configuration

No. of cylinders	5	6
Total mass of water, kg	Available on request	1,320
- Jacket cooling water, kg		850
- Scavenge air cooling water, kg		470
Total mass of oil, kg		3,450
- Oil in engine system, kg		2,170
- Oil pan, kg		920
- Hydraulic system oil, kg		360
Engine configuration:		
TC configuration	Available on request	1xMET66MA
L connection position fore/aft		Fore
K connection position fore/aft		Fore
Auto filter - Kanagawa		NA
Auto filter - Boll filter type 6.64		With
Auto filter - Boll filter new type 8.48		NA
Separate hydraulic oil		NA
Separate T/C		NA
2nd order moment compensator / position fore		With
2nd order moment compensator / position aft		With
EGR High sulphur		NA
EGR Low sulphur		NA
EGR Configuration		NA
HPSCR		NA
Waste heat recovery system		NA
Cooler type		1x LKMX-C2/2201
Electrical driven HPS		NA
Engine driven HPS		With
HPS Centre		NA
HPS Aft		With

605 59 94-6.0.0

Table 5.08.01: G70ME-C10.5 , Water and oil calculation

Water and oil calculation - TIII

Masses and engine configuration: EGRBP

No. of cylinders	5	6
Total mass of water, kg	Available on request	2,470
- Jacket cooling water, kg		850
- Scavenge air cooling water, kg		940
- Cooling water in EGR (kg)		680
Total mass of oil, kg		3,650
- Oil in engine system, kg		2,270
- Oil pan, kg		920
- Hydraulic system oil, kg		460
Engine configuration:		
Turbocharger configuration	Available on request	1×MET60MB
L connection position fore/aft		Fore
K connection position fore/aft		Fore
Auto filter-Kanagawa		With
Auto filter- Boll filter type 6.64		NA
Auto filter-Boll filter new type 8.48		NA
Separate hydraulic oil		NA
Separate turbocharger		NA
2nd order moment compensator / position fore		With
2nd order moment compensator / position aft		With
EGR High sulphur		NA
EGR Low sulphur		WIth
EGR Configuration		1×RTU-24 1×Siemens EGR10
Waste heat recovery system		NA
Cooler type		1×LKMX-C2/2201 1×EGR-D2/1334
Electrical driven HPS		NA
Engine driven HPS		With
HPS Center		NA
HPS Aft		With

605 70 07-4.0.0

Table 5.08.01: G70ME-C10.5-EGRBP, Water and oil calculation

2024-05-23 - en

Masses and engine configuration: HPSCR

No. of cylinders	5	6
Total mass of water, kg	Available on request	1,590
- Jacket cooling water, kg		1,120
- Scavenge air cooling water, kg		470
Total mass of oil, kg		3,310
- Oil in engine system, kg		1,990
- Oil pan, kg		870
- Hydraulic system oil, kg		450
Engine configuration:		
Turbocharger configuration	Available on request	1×MET60MB
L connection position fore/aft		Fore
K connection position fore/aft		Fore
Auto filter-Kanagawa		NA
Auto filter- Boll filter type 6.49		With
Auto filter-Boll filter new type 8.48		NA
Separate hydraulic oil		NA
Separate turbocharger		NA
2nd order moment compensator / position fore		Without
2nd order moment compensator / position aft		Without
EGR High sulphur		NA
EGR Low sulphur		NA
EGR Configuration		NA
HPSCR		With
Waste heat recovery system		NA
Cooler type		1×LKMX-C2/2201
Electrical driven HPS		NA
Engine driven HPS		With
HPS Center		NA
HPS Aft		With

637 40 80-4.0.0

Table 5.08.02: G70ME-C10.5-HPSCR, Water and oil in engine

2024-05-23 - en

Masses and engine configuration: LPSCR

No. of cylinders	5	6
Total mass of water, kg	1,190	1,520
- Jacket cooling water, kg	720	1,050
- Scavenge air cooling water, kg	470	470
Total mass of oil, kg	3,060	3,410
- Oil in engine system, kg	1,860	2,160
- Oil pan, kg	830	870
- Hydraulic system oil, kg	370	380
Engine configuration:		
TC configuration	1×MET66MB	1×MET66MB
L connection position fore/aft	Fore	Aft
K connection position fore/aft	Fore	Aft
Auto filter-Kanagawa	NA	NA
Auto filter- Boll filter type 6.64	NA	With
Auto filter-Boll filter new type 6.49	With	NA
Separate hydraulic oil	NA	NA
Separate turbocharger	NA	NA
2nd order moment compensator / position fore	With	Without
2nd order moment compensator / position aft	With	With
EGR High sulphur	NA	NA
EGR Low sulphur	NA	NA
EGR Configuration	NA	NA
LPSCR	With	With
Waste heat recovery system	NA	NA
Cooler type	1×LKMX-C2/2201	1x LKMX-C2/2201
Electrical driven HPS	NA	NA
Engine driven HPS	With	With
HPS Center	NA	NA
HPS Aft	With	With

632 74 92-1.0.0/606 18 45-6.0.0

Table 5.08.03: G70ME-C10.5-LPSCR, Water and oil in engine

2024-05-23 - en

This page is intentionally left blank

Engine pipe connections - TII

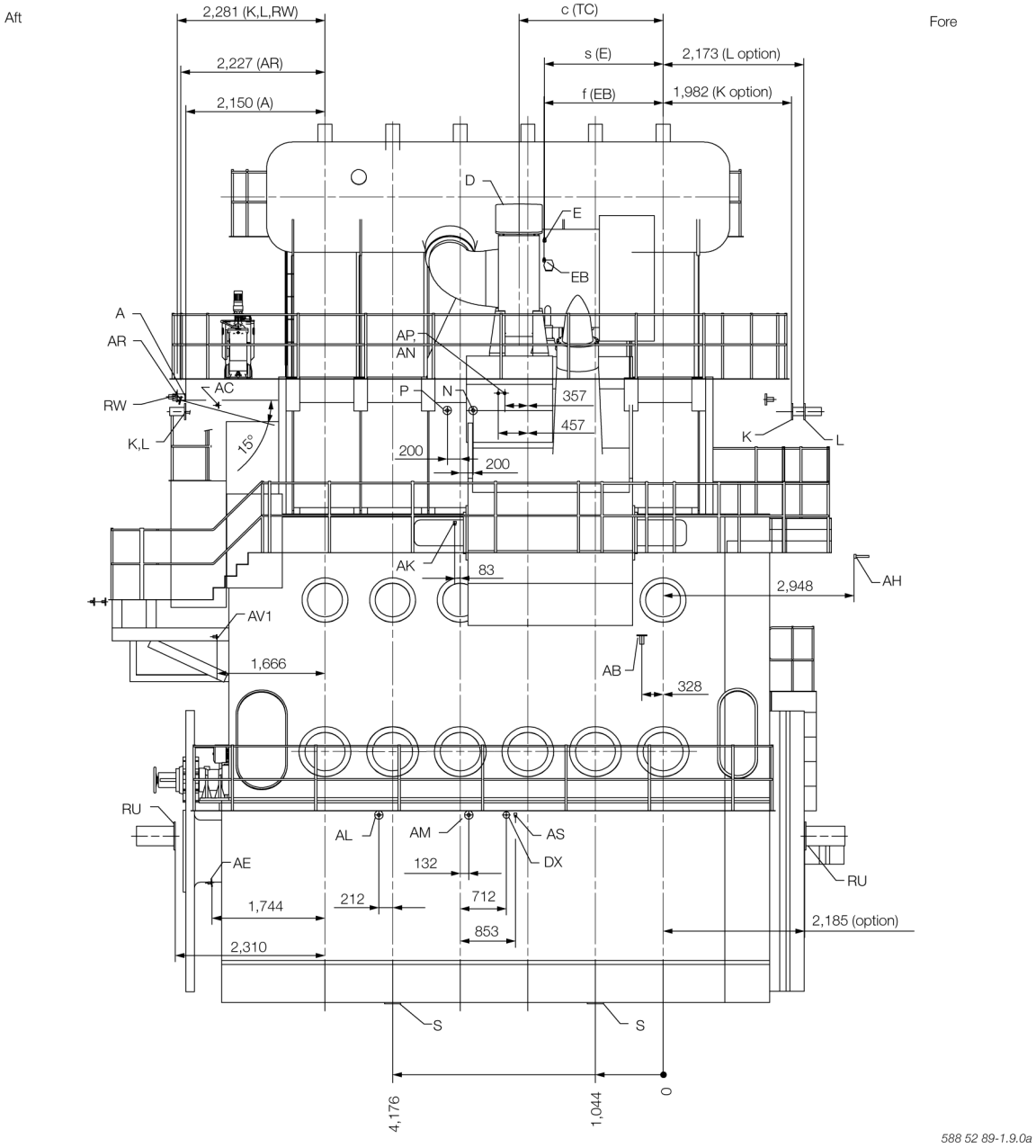

The letters refer to list of ‘Counterflanges’, Fig. 5.10.01.

Fig. 5.09.01a: Example of Engine Pipe Connections, 6G70ME-C10.5 T-II with one turbocharger mounted on the exhaust side

2025-12-10 - en

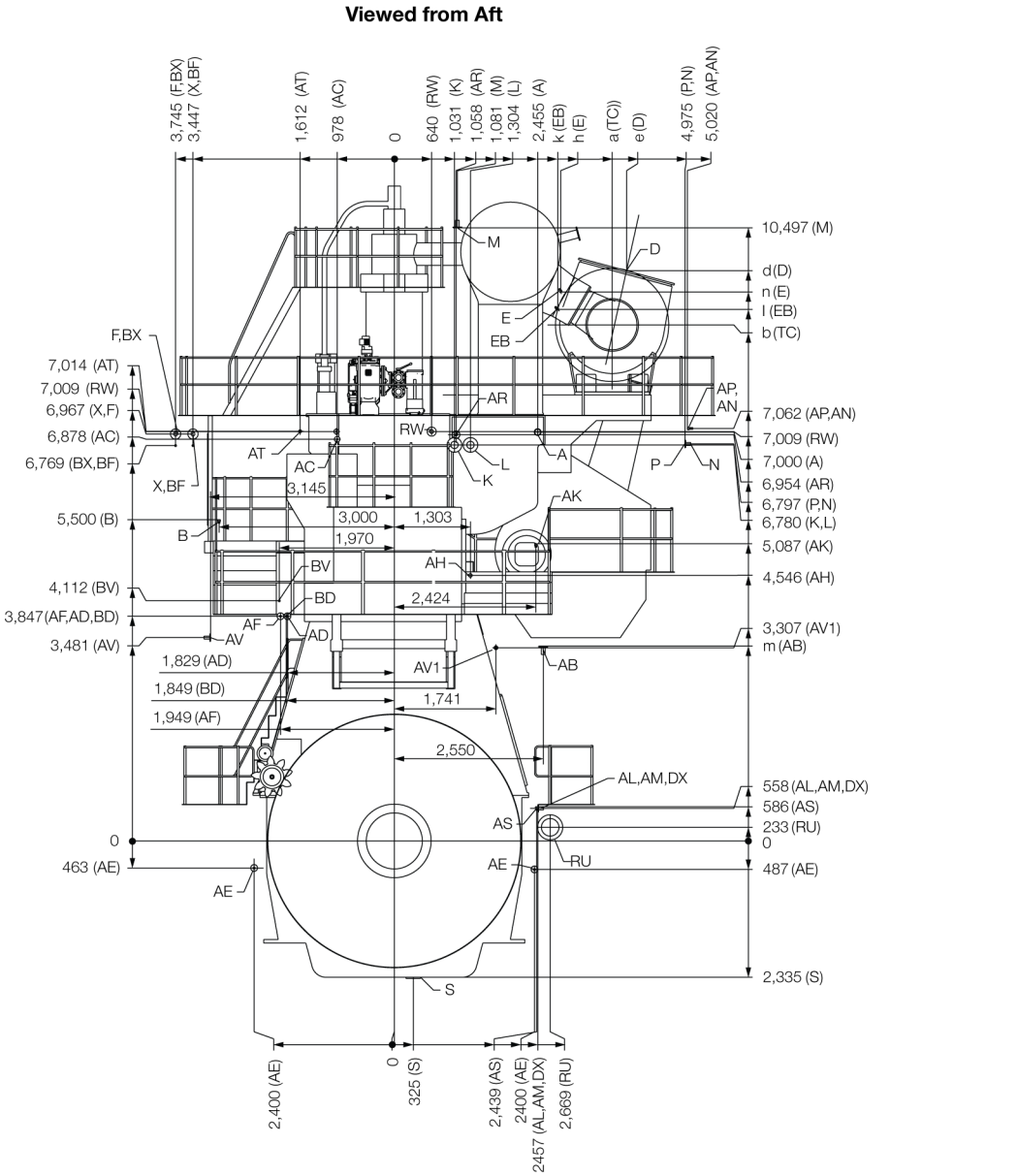

The letters refer to list of ‘Counterflanges’, Fig. 5.10.01.

Fig. 5.09.01b: Example of Engine Pipe Connections, 6G70ME-C10.5 T-II with one turbocharger mounted on the exhaust side

2025-12-10 - en

Everllence			
TC Type	TCA77	TCT50	TCT60
a	3,730	Available on Request	
b	8,835		
c	2,225		
d	9,892		
e	3,978		
n	9,162		
h	2,992		
s	1,889		
k	Available on Request		
l			
f			
m			

Accelleron			
TC Type	A170/A270	A175/A275	A180/A280
a	Available on Request	3,337	Available on Request
b		8,072	
c		2,054	
d		9,178	
e		3,632	
n		8,307	
h		3,022	
s		1,604	
k		Available on Request	
l			
f			
m		3,335	

2025-12-10 - en

MHI					
TC Type	MET53MBII	MET60MBII	MET66MA	MET66MB	MET66MBII
a	Available on Request		3,475	3,475	Available on Request
b			8,550	8,550	
c			2,283	2,295	
d			9,328	9,328	
e			3,683	3,683	
n			9,310	9,310	
h			3,015	3,015	
s			1,855	1,855	
k			Available on Request	2,770	
l				3,663	
f				1,862	
m			3,183	3,325	

Filter	g	p
Boll & Kirch	900	
Kanagawa		400

Table 5.09.01: Engine Pipe Connections, 6G70ME-C10.5 T-II with one turbocharger on exhaust side

2025-12-10 - en

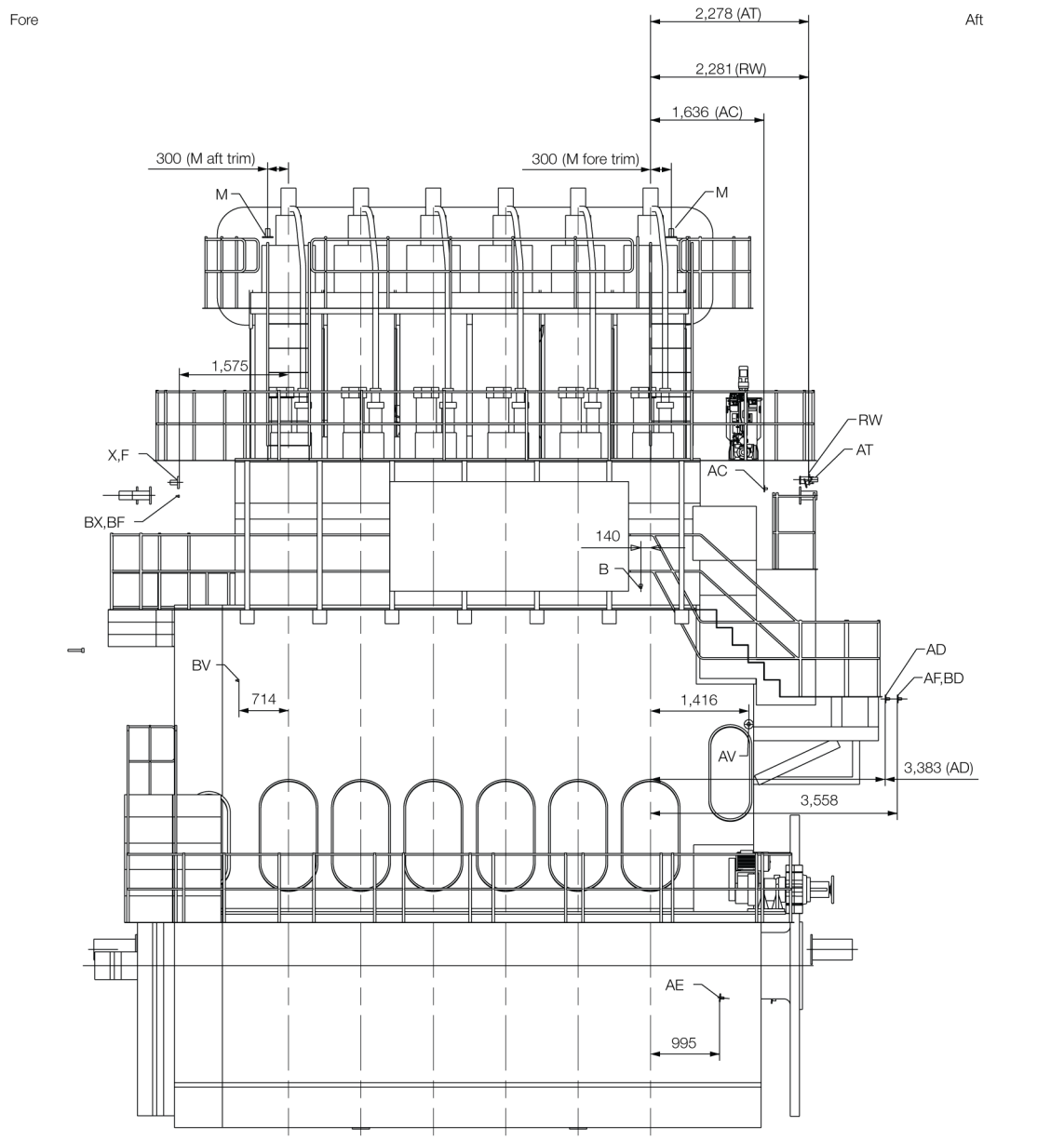

588 52 89-1.9.0c

The letters refer to list of 'Counterflanges', Fig. 5.10.01.

Fig. 5.09.01c: Example of Engine Pipe Connections, 6G70ME-C10.5 T-II with one turbocharger mounted on the exhaust side

Please note that the latest version of the dimensioned drawing is available for download at www.everllence.com --> 'Two-Stroke' --> 'Installation Drawings'. First choose engine series, then engine type and select 'Outline drawing' for the actual number of cylinders and type of turbocharger installation in the list of drawings available for download.

2025-12-10 - en

This page is intentionally left blank

2025-12-10 - en

Engine pipe connections - TIII

EGRBP

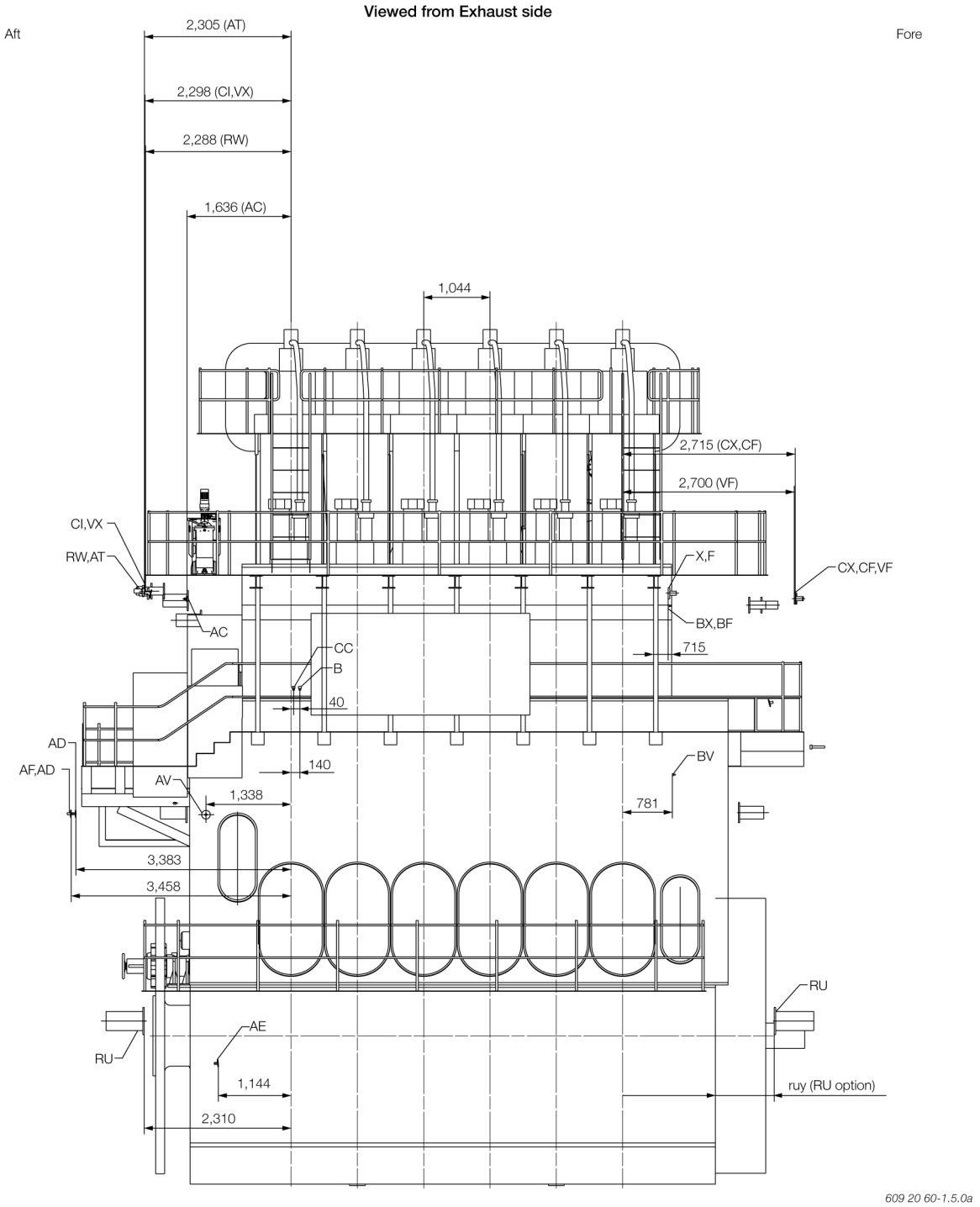

The letters refer to list of 'Counterflanges', Table 5.10.01.

Fig. 5.09.01a: 6G70ME-C10.5-GA-EGRBP, Example of Engine pipe connections, with one turbocharger mounted on the exhaust side.

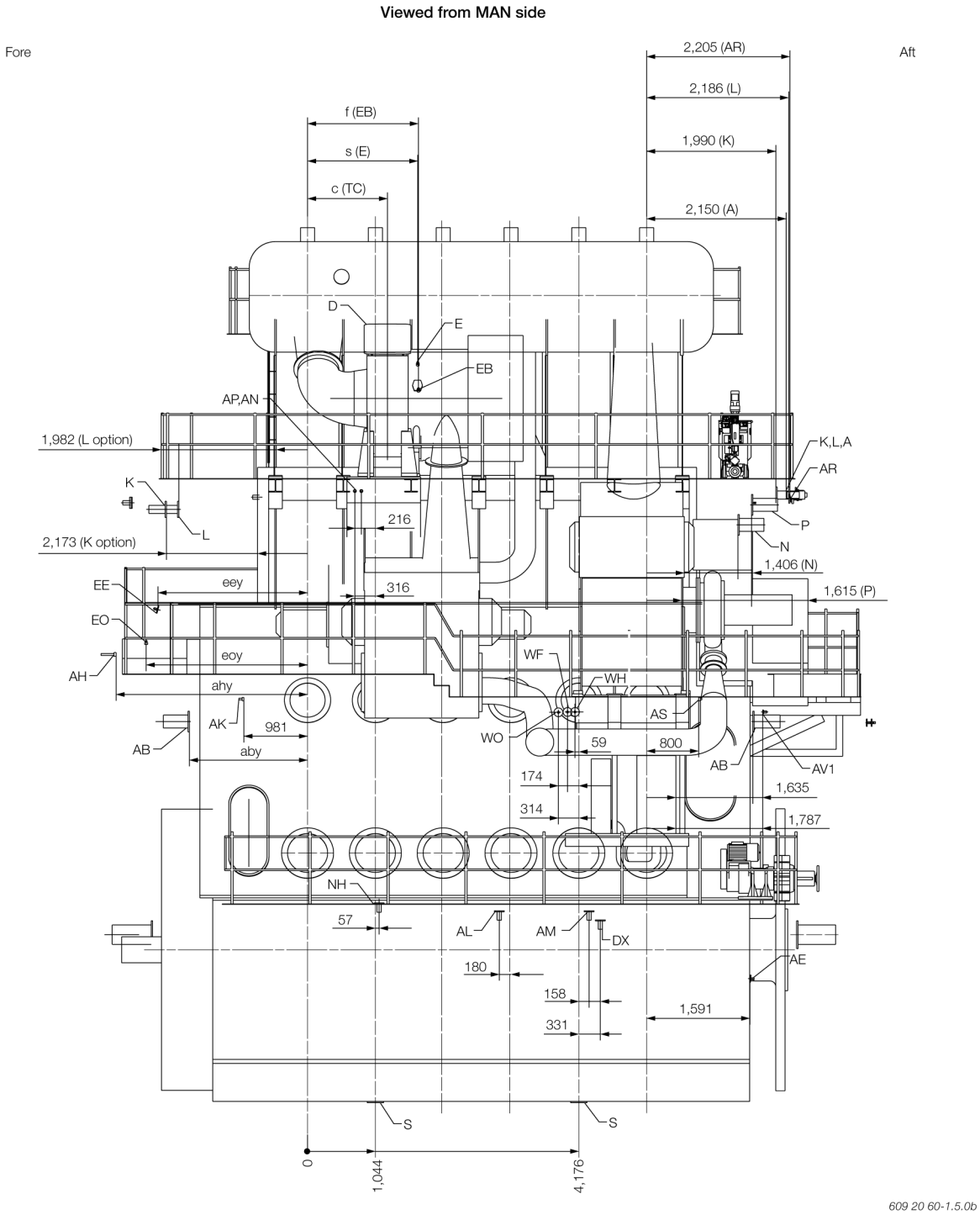

The letters refer to list of 'Counterflanges', Table 5.10.01.

Fig. 5.09.01b: 6G70ME-C10.5-GA-EGRBP, Example of Engine pipe connections, with one turbocharger mounted on the exhaust side.

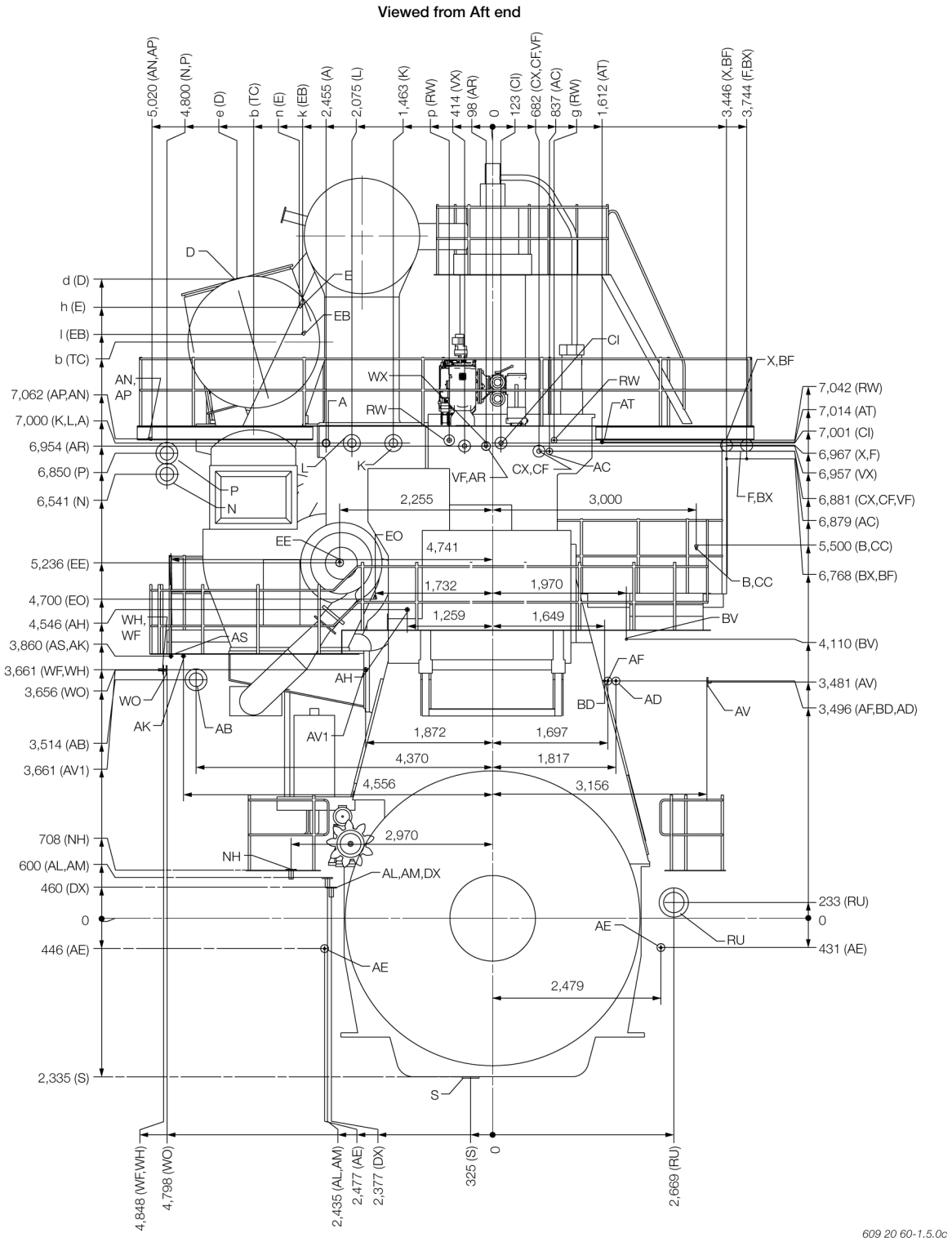

The letters refer to list of ‘Counterflanges’, Table 5.10.01.

Fig. 5.09.01c: 6G70ME-C10.5-GA-EGRBP, Example of Engine pipe connections, with one turbocharger mounted on the exhaust side.

Dimensions of turbochargers on exhaust side

Everllence		
Turbocharger type	**TCA66**	**TCA77**
a	3,420	3,520
b	8,137	8,487
c	1,284	1,231
d	8,914	9,544
e	3,628	3,768
n	2,699	3,193
h	8,349	8,814
s	1,704	1,772
k		
l		
f		

Accelleron			
Turbocharger type	**A165-L/A265-L**	**A170-L/A270-L**	**A175-L/A275-L**
a	Available on request		3,337
b			8,072
c			1,186
d			8,907
e			3,526
n			3,022
h			8,629
s			1,636
k			
l			
f			

MHI			
Turbocharger type	**MET48MBII**	**MET60MB**	**MET60MBII**
a	Available on request	3,475	Available on request
b		8,107	
c		1,195	
d		8,731	
e		3,835	
n		3,015	
h		8,567	
s		1,617	
k		2,846	
l		8,275	
f		1,637	

Dimension	With moment compensator	Without moment compensator
eey	2,303	2,103
eoy	2,485	2,285
ahy	2,935	1,857
aby	1,820	1,620
ruy	2,385	2,185

Filter	g	p
Boll & Kirch	905	
Kanagawa		990

For location of header and service tank 3000mm above connection AC

Table 5.09.01: 6G70ME-C10.5-GA-EGRBP, Example of Engine pipe connections, with one turbocharger on exhaust side.

HPSCR

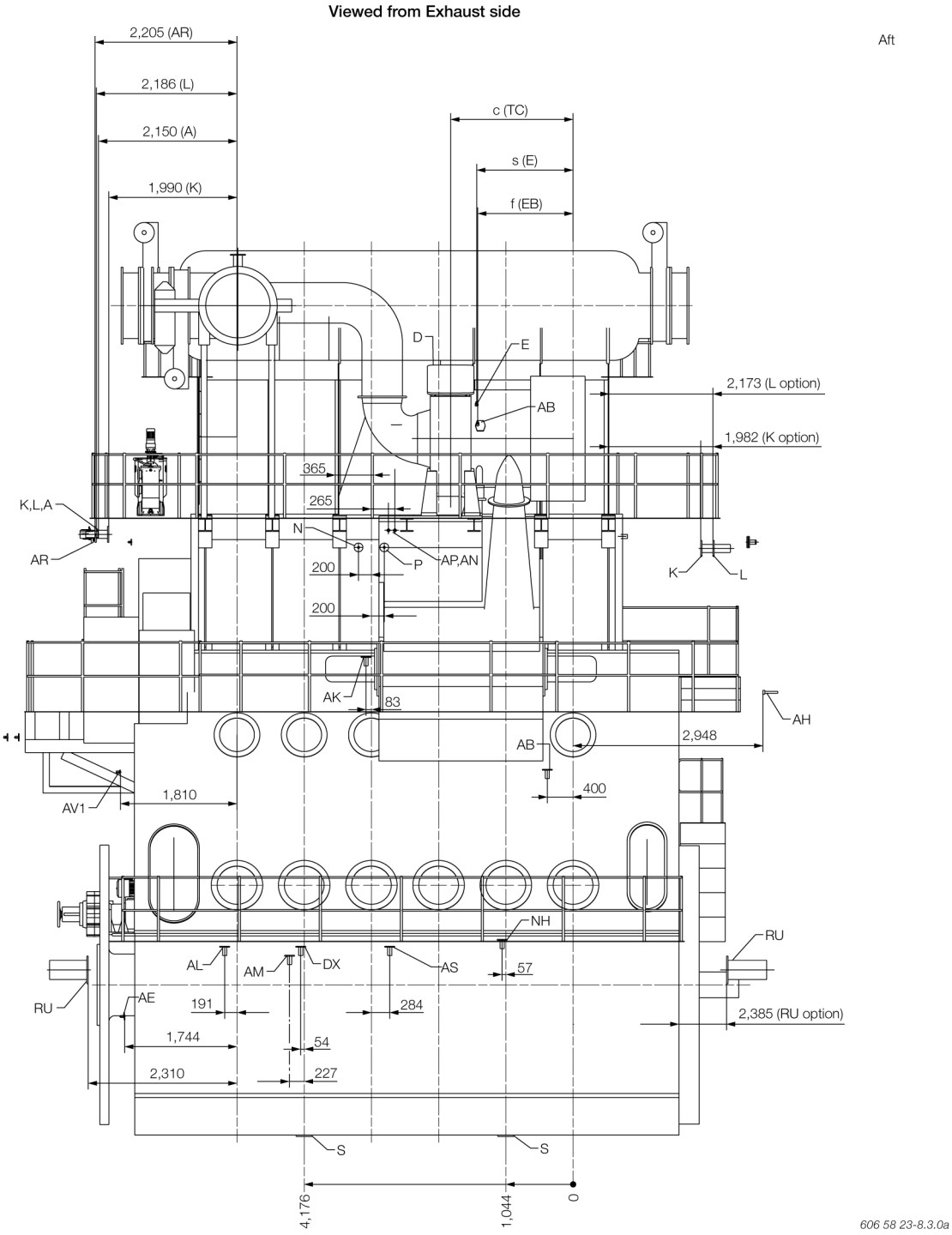

The letters refer to list of 'Counterflanges', Fig. 5.10.01.

Fig. 5.09.02a: 6G70ME-C10.5-GA-HPSCR, Example of Engine pipe connections, with one turbocharger mounted on the exhaust side.

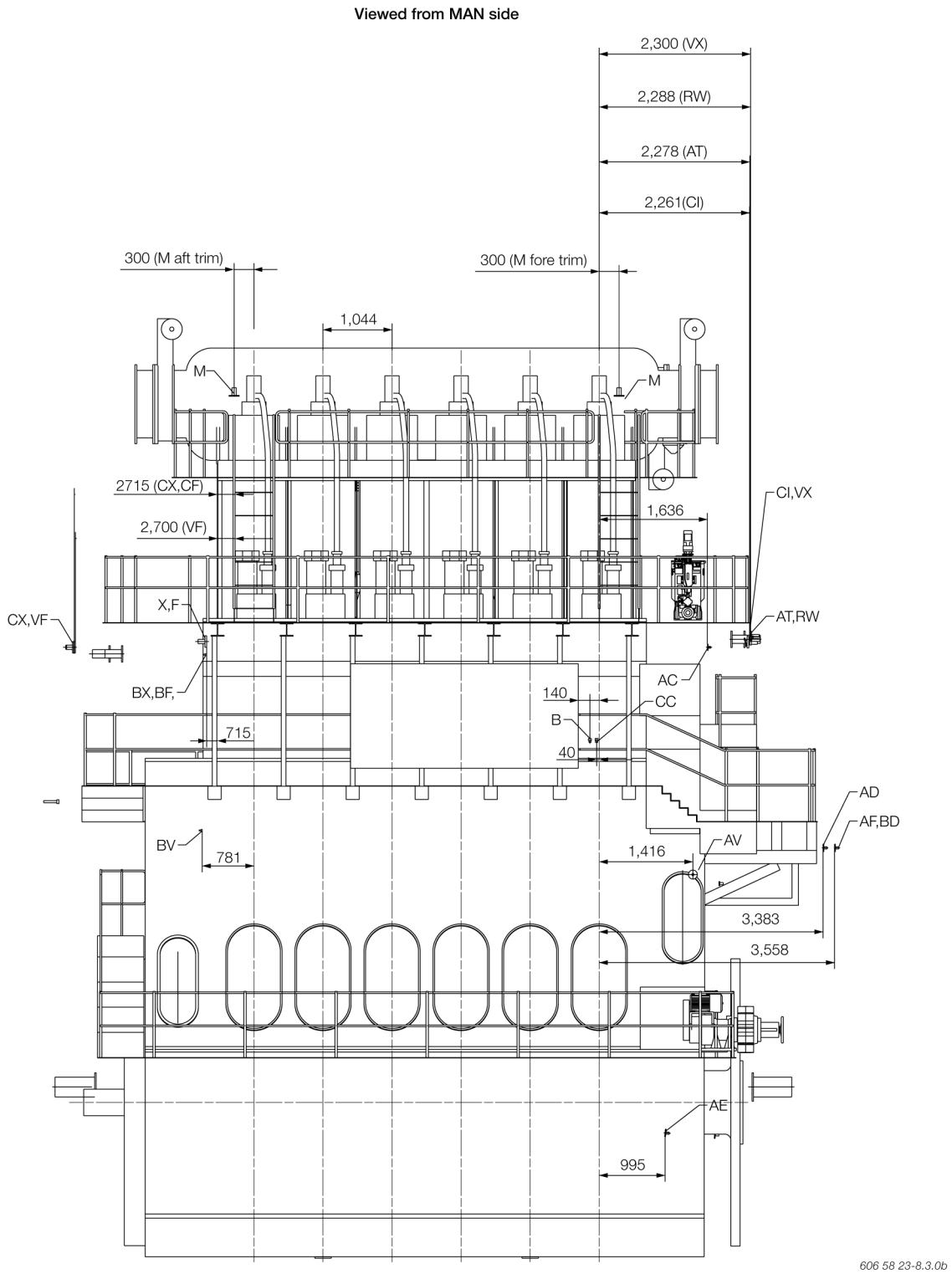

The letters refer to list of 'Counterflanges', Fig. 5.10.01.

Fig. 5.09.02b: 6G70ME-C10.5-HPSCR, Example of Engine pipe connections, with one turbocharger mounted on the exhaust side.

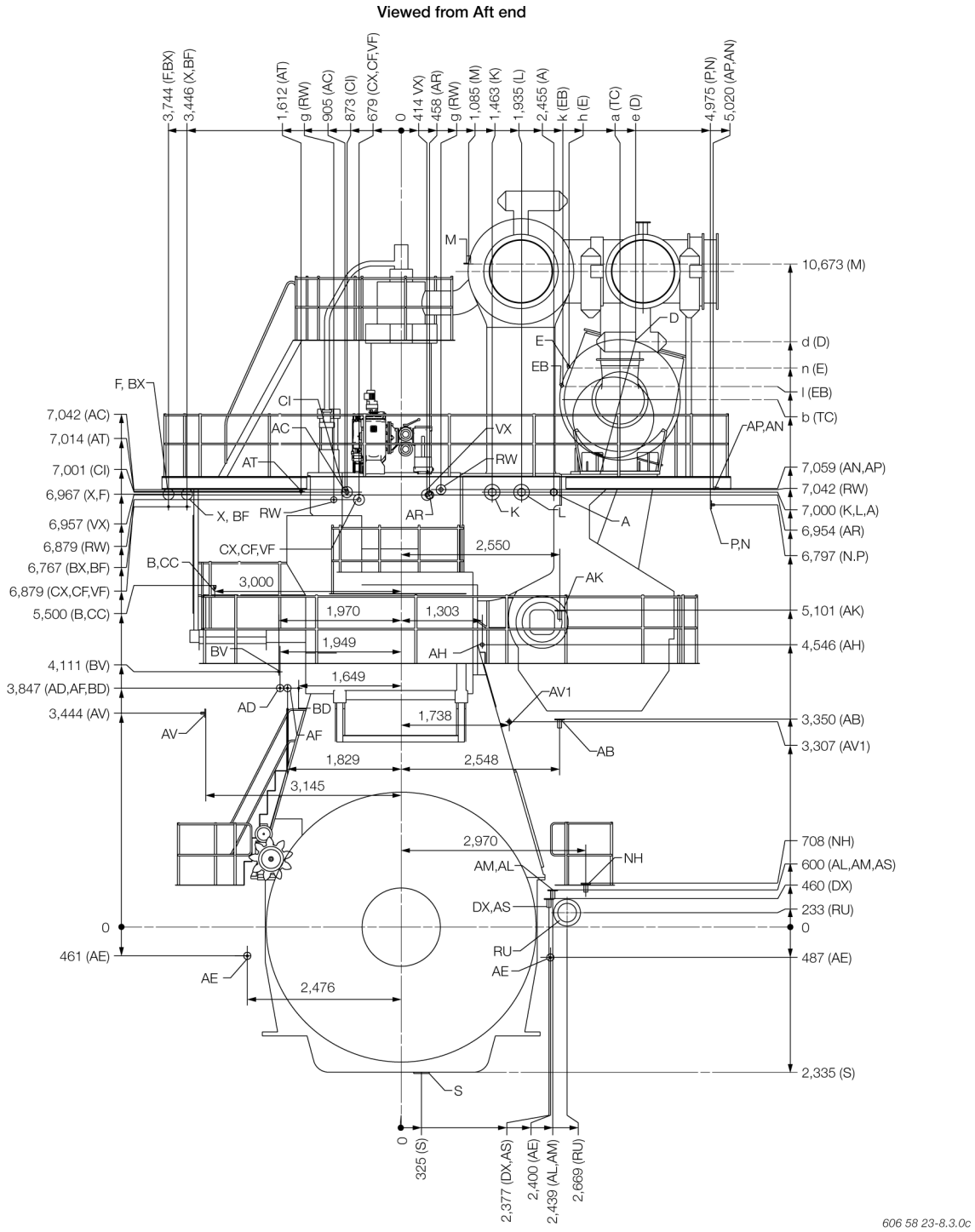

The letters refer to list of ‘Counterflanges’, Fig. 5.10.01.

Fig. 5.09.02c: 6G70ME-C10.5-HPSCR, Example of Engine pipe connections, with one turbocharger mounted on the exhaust side.

Dimensions of turbochargers on exhaust side

Everllence	
Turbocharger type	**TCA77**
a	3,520
b	8,487
c	1,901
d	9,004
e	3,768
n	8,685
h	2,782
s	1,440
k	
l	
f	

Accelleron	
Turbocharger type	**A175-L/A275-L**
a	3,337
b	8,072
c	1,946
d	8,907
e	3,526
n	8,629
h	3,022
s	1,496
k	
l	
f	

MHI	
Turbocharger type	**MET66MB**
a	3,412
b	8,202
c	1,972
d	8,980
e	3,620
n	8,642
h	3,052
s	1,537
k	2,707
l	8,390
f	1,544

Filter	g	p
Boll & Kirch	905	p
Kanagawa		990

For location of header and service tank 3000mm above connection AC

Table. 5.09.02: 6G70ME-C10.5-GA-HPSCR, Example of Engine pipe connections, with one turbocharger mounted on the exhaust side.

Note that the latest versions of the dimensioned drawings are available for download at www.everllence.com--> 'Marine'--> 'Products'--> 'Planning tools and downloads' --> 'Installation Drawings'. First choose engine series, then engine type and select ‘Download drawing’ for the actual number of cylinders and type of turbocharger installation in the list of drawings.

Counterflanges dimensions for connections D, E and EB

Dimensions connection D

Everllence type TCA44-88

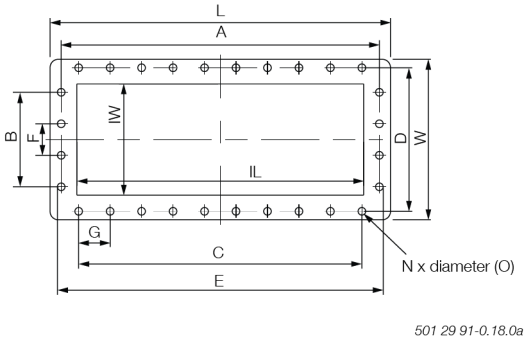

Type TCA series – rectangular type													
Tur-bochar-ger type	L	W	IL	IW	A	B	C	D	E	F	G	N	O
TCA44	1,054	444	949	340	1,001	312	826	408	1,012	104	118	24	ø13.5
TCA55	1,206	516	1,080	390	1,143	360	1,000	472	1,155	120	125	26	ø17.5
TCA66	1,433	613	1,283	463	1,358	420	1,200	560	1,373	140	150	26	ø17.5
TCA77	1,694	720	1,524	550	1,612	480	1,440	664	1,628	160	160	28	ø22
TCA88	2,012	855	1,810	653	1,914	570	1,710	788	1,934	190	190	28	ø22
TCA99	2,207	938	1,985	717	2100	624	1,872	866	2,120	208	208	28	ø22

Fig. 5.10.01a: Exhaust outlet dimensions [mm], connection D, Everllence TCA turbocharger

2026-05-05 - en

Everllence type TCR

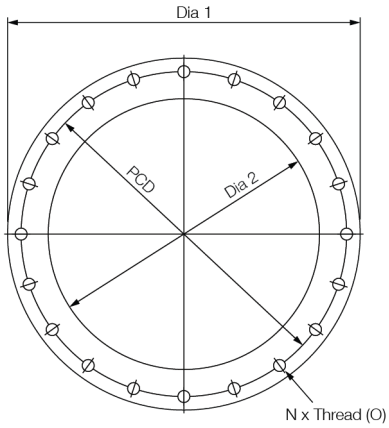

503 26 38-6.6.1b

Type TCR series – round type					
Turbocharger type	Dia 1	Dia 2	PCD	N	O
TCR18	425	310	395	12	ø22
TCR20	540	373	495	16	ø22
TCR22	703	487	650	20	ø22

Fig. 5.10.01b: Exhaust outlet dimensions [mm], connection D, Everllence TCR turbocharger

2026-05-05 - en

Accelleron type A100/A200-L

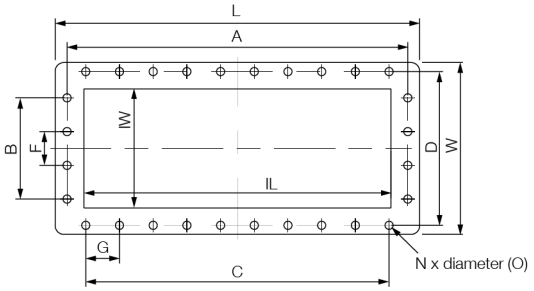

501 29 91-0.18.0b

Type A100/200-L series – rectangular type												
Turbocharger type	L	W	IL	IW	A	B	C	D	F	G	N	O
A255-L	Available on request											
A260-L												
A165/A265-L	1,114	562	950	404	1,050	430	900	511	86	100	32	ø22
A170/A270-L	1,280	625	1,095	466	1,210	450	1,080	568	90	120	32	ø22
A175/A275-L	1,523	770	1,320	562	1,446	510	1,260	710	170	140	28	ø30
A180/A280-L	1,743	856	1,491	634	1,650	630	1,485	786	150	135	36	ø30
A185-L	1,955	958	1,663	707	1,860	725	1,595	886	145	145	36	ø30

Fig. 5.10.01c: Exhaust outlet dimensions [mm], connection D, Accelleron A100/200-L turbocharger

2026-05-05 - en

MHI type MET

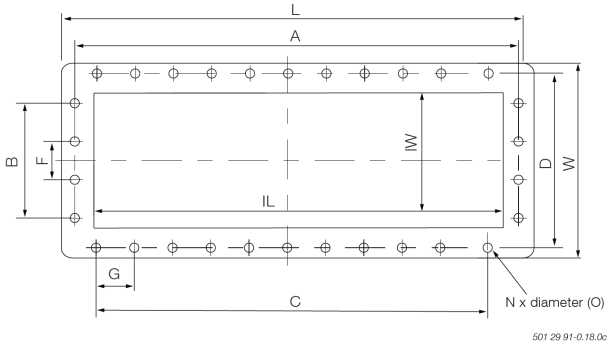

Type MET – rectangular type												
Turbocharger type	L	W	IL	IW	A	B	C	D	F	G	N	O
Series MB												
MET33	Available on request											
MET37	999	353	909	263	969	240	855	323	80	95	28	ø15
MET42	1,094	381	1,004	291	1,061	261	950	351	87	95	30	ø15
MET48	1,240	430	1,140	330	1,206	300	1,070	396	100	107	30	ø15
MET53	1,389	485	1,273	369	1,340	330	1,200	440	110	120	30	ø20
MET60	1,528	522	1,418	410	1,488	330	1,320	482	110	110	34	ø20
MET66	1,713	585	1,587	459	1,663	372	1,536	535	124	128	34	ø20
MET71	1,837	617	1,717	497	1,792	480	1,584	572	120	132	36	ø20
MET83	2,163	731	2,009	581	2,103	480	1,920	671	160	160	34	ø24
MET90	2,378	801	2,218	641	2,318	525	2,100	741	175	175	34	ø24
Series MA												
MET33	700	310	605	222	670	180	550	280	90	110	18	ø15
MET42	883	365	793	275	850	240	630	335	80	90	24	ø15
MET53	1,122	465	1,006	349	1,073	300	945	420	100	105	28	ø20
MET60	1,230	500	1,120	388	1,190	315	1,050	460	105	105	30	ø20
MET66	1,380	560	1,254	434	1,330	345	1,200	510	115	120	30	ø20
MET71	1,520	600	1,400	480	1,475	345	1,265	555	115	115	34	ø20
MET83	1,740	700	1,586	550	1,680	450	1,500	640	150	150	30	ø24
MET90	1,910	755	1,750	595	1,850	480	1,650	695	160	165	30	ø24

Fig. 5.10.01d: Exhaust outlet measurements [mm], connection D, MHI MET MB and MA turbochargers

2026-05-05 - en

Dimensions connection E

Everllence type TCA

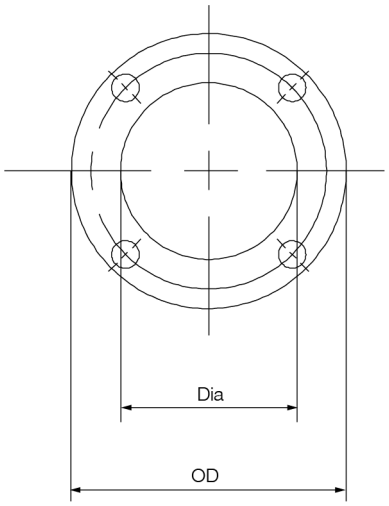

501 29 91-0.18.0

Turbocharger type	Dia/ISO	Dia/JIS	OD	PCD	N	O	Thickness of flanges
TCA44	61	77	120	90	4	ø14	14

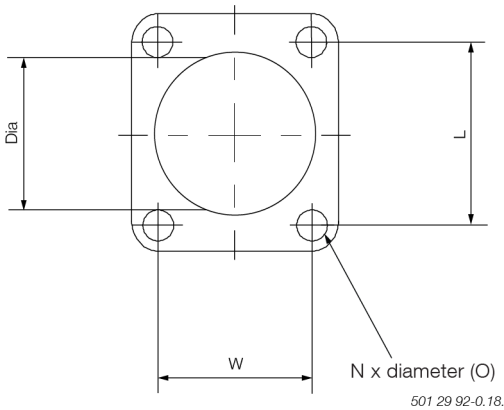

501 29 92-0.18.0

Turbocharger type	Dia/ISO	Dia/JIS	L	W	N	O	Thickness of flanges
TCA55	61	77	86	76	4	ø14	16
TCA66	90	90	110	90	4	ø18	16

Fig. 5.10.01e and f: Venting of lube oil discharge pipe [mm], connection E, Everllence TCA turbocharger

2026-05-05 - en

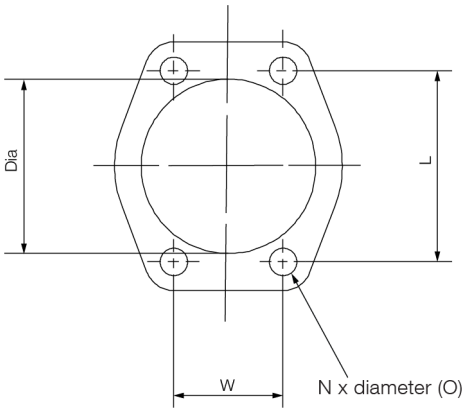

501 29 91-0.18.0

Turbocharger type	Dia/ISO	Dia/JIS	L	W	N	O	Thickness of flanges
TCA77	115	115	126	72	4	ø18	18
TCA88	141	141	150	86	4	ø18	18
TCA99	141	141	164	94	4	ø22	24

Fig. 5.10.01g: Venting of lube oil discharge pipe [mm], connection E, Everllence TCA turbocharger

2026-05-05 - en

Accelleron type A100/A200-L

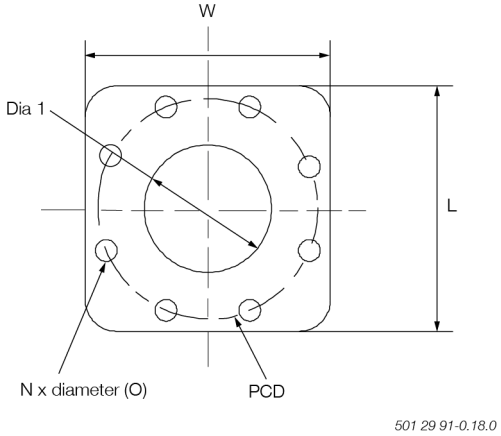

Turbocharger type	Dia 1	PCD	L = W	N	O	Thickness of flanges
A255-L	Available on request					
A260-L						
A165/A265-L	43	100	106	8	ø8.5	18
A170/A270-L	77	100	115	8	ø11	18
A175/A275-L	77	126	140	8	ø11	18
A180/A280-L	90	142	158	8	ø13	18
A185-L	115	157	178	8	ø13	18

Fig. 5.10.01h: Venting of lube oil discharge pipe [mm], connection E, Accelleron A100/200-L turbocharger

2026-05-05 - en

MHI type MET MB

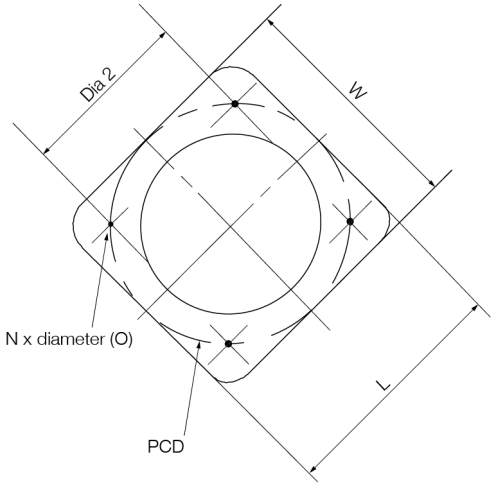

501 29 91-0.18.0

Turbocharger type	L = W	Dia 2	PCD	N	O	Thickness of flanges (A)
MET33MB	Available on request					
MET42MB	105	61	105	4	ø14	14
MET48MB	125	77	130	4	ø14	14
MET53MB	125	77	130	4	ø14	14
MET60MB	140	90	145	4	ø18	14
MET66MB	140	90	145	4	ø18	14

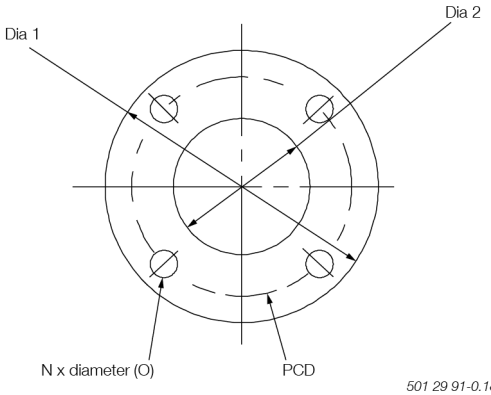

501 29 91-0.18.0

Turbocharger type	Dia 1	Dia 2	PCD	N	O	Thickness of flanges (A)
MET71MB	180	90	145	4	ø18	14
MET83MB	200	115	165	4	ø18	16
MET90MB	200	115	165	4	ø18	16

Fig. 5.10.01i and j: Venting of lube oil discharge pipe [mm], connection E, MHI MET MB turbocharger

2026-05-05 - en

MHI type MET MA

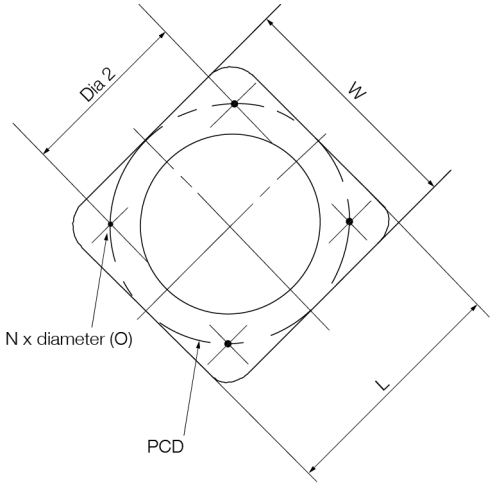

501 29 91-0.18.0

Turbocharger type	L=W	Dia 2	PCD	N	O	Thickness of flanges (A)
MET33MA	Available on request					
MET42MB	105	61	105	4	ø14	14
MET53MB	125	77	130	4	ø14	14
MET60MB	140	90	145	4	ø18	14
MET66MB	140	90	145	4	ø18	14
MET71MB	140	90	145	4	ø18	14
MET90MB	155	115	155	4	ø18	14

2026-05-05 - en

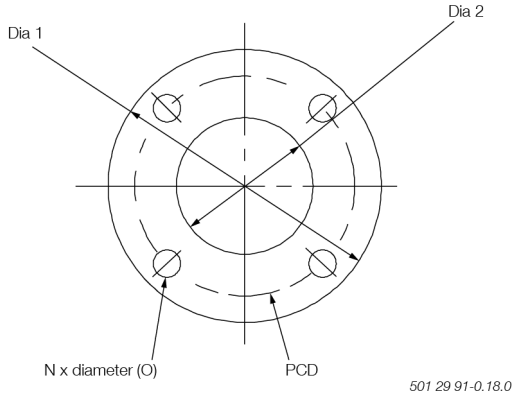

Turbocharger type	Dia 1	Dia 2	PCD	N	O	Thickness of flanges (A)
MET83MB	180	90	145	4	ø18	148

Fig. 5.10.01k and l: Venting of lube oil discharge pipe [mm], connection E, MHI MET MA turbocharger

2026-05-05 - en

Dimensions connection EB

MHI type MET MB

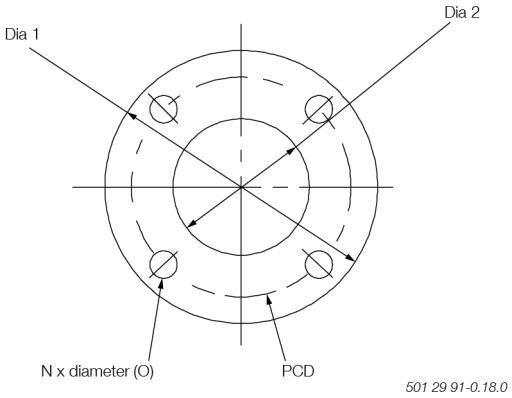

Turbocharger type	Dia 1	Dia 2	PCD	N	O	Thickness of flanges (A)
MET42MB	95	43	75	4	ø12	10
MET60MB	120	49	95	4	ø14	12
MET66MB	120	49	95	4	ø14	12
MET71MB	120	49	95	4	ø14	12
MET83MB	120	49	95	4	ø14	12

2026-05-05 - en

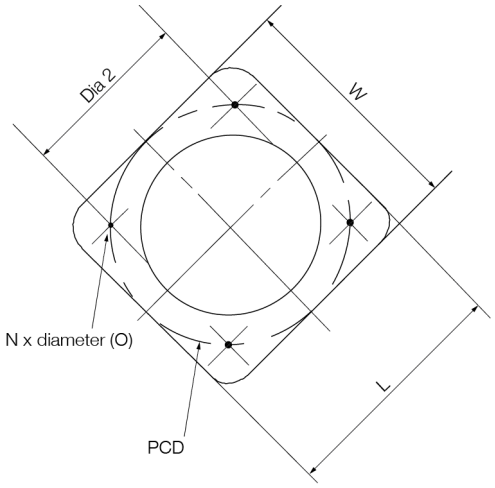

501 29 91-0.18.0c

Turbocharger type	L = W	Dia 2	PCD	N	O	Thickness of flanges (A)
MET48MB	95	49	95	4	ø14	12
MET53MB	95	49	95	4	ø14	12
MET90MB	125	77	130	4	ø14	14

198 70 27-3.5.0

Fig. 5.10.01m and n: Cooling air pipe dimensions [mm], connection EB, MHI MB turbocharger

2026-05-05 - en

This page is intentionally left blank

Engine seating and arrangement of holding down bolts

General

The latest version of the Installation Drawings of this section is available for download at www.everllence.com--> 'Two-Stroke' --> Installation Drawings'. Specify engine and accept the ‘Conditions for use’ before clicking on ‘Download Drawings’.

The dimensions of the seating stated in Figs. 5.12.01 and 5.12.02 are for guidance only.

The engine is designed for mounting on epoxy chocks, in which case the underside of the bedplate’s lower flanges has no taper.

The epoxy types approved by Everllence are:

- ‘Chockfast Orange PR 610 TCF’
  and ‘Epocast 36’ from ITW Philadelphia Resins Corporation, USA.
- ‘Durasin’ from
  Daemmstoff Industrie Korea Ltd.
- ‘EPY’ from
  Marine Service Jaroszewicz S.C., Poland.
- ‘Loctite Fixmaster Marine Chocking’, Henkel.
- 'CMP Liner Blue' from
  Chugoku Marine Paints Ltd, Japan.

2026-06-02 - en

This page is intentionally left blank

2026-06-02 - en

Epoxy chocks arrangement

General

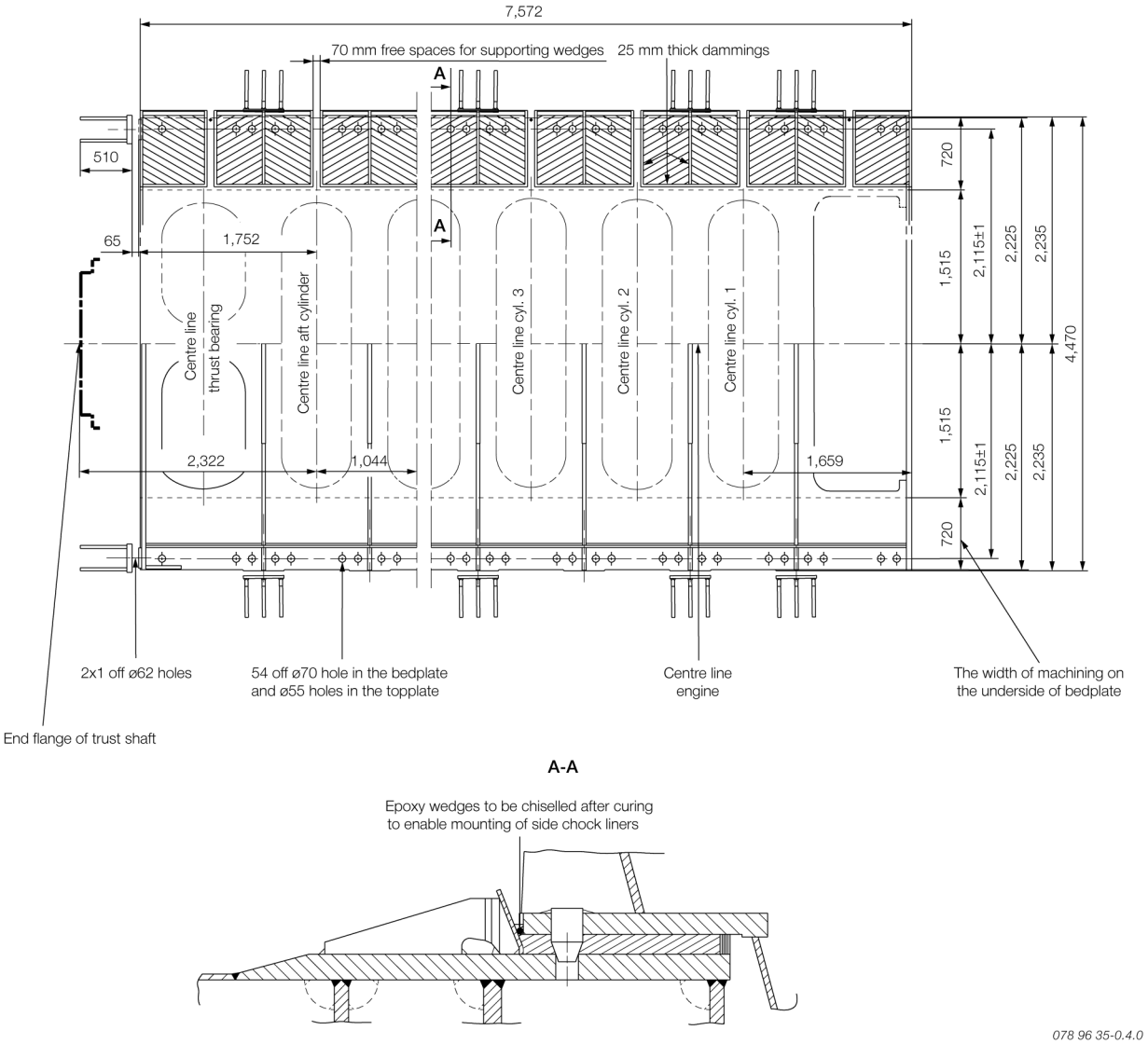

Fig. 5.12.01: Arrangement of epoxy chocks and holding down bolts

For details of chocks and bolts see special drawings. For securing of supporting chocks see special drawing.

Preparing holes for holding-down bolts

1) The engine builder drills the holes for holding down-bolts in the bedplate while observing the tolerances indicated on Everllence drawings for machining the bedplate

2) The shipyard drills the holes for holding-down bolts in the top plates while observing the tolerances given on the present drawing

3) The holding-down bolts must be made in accordance with Everllence drawings.

Engine seating profile

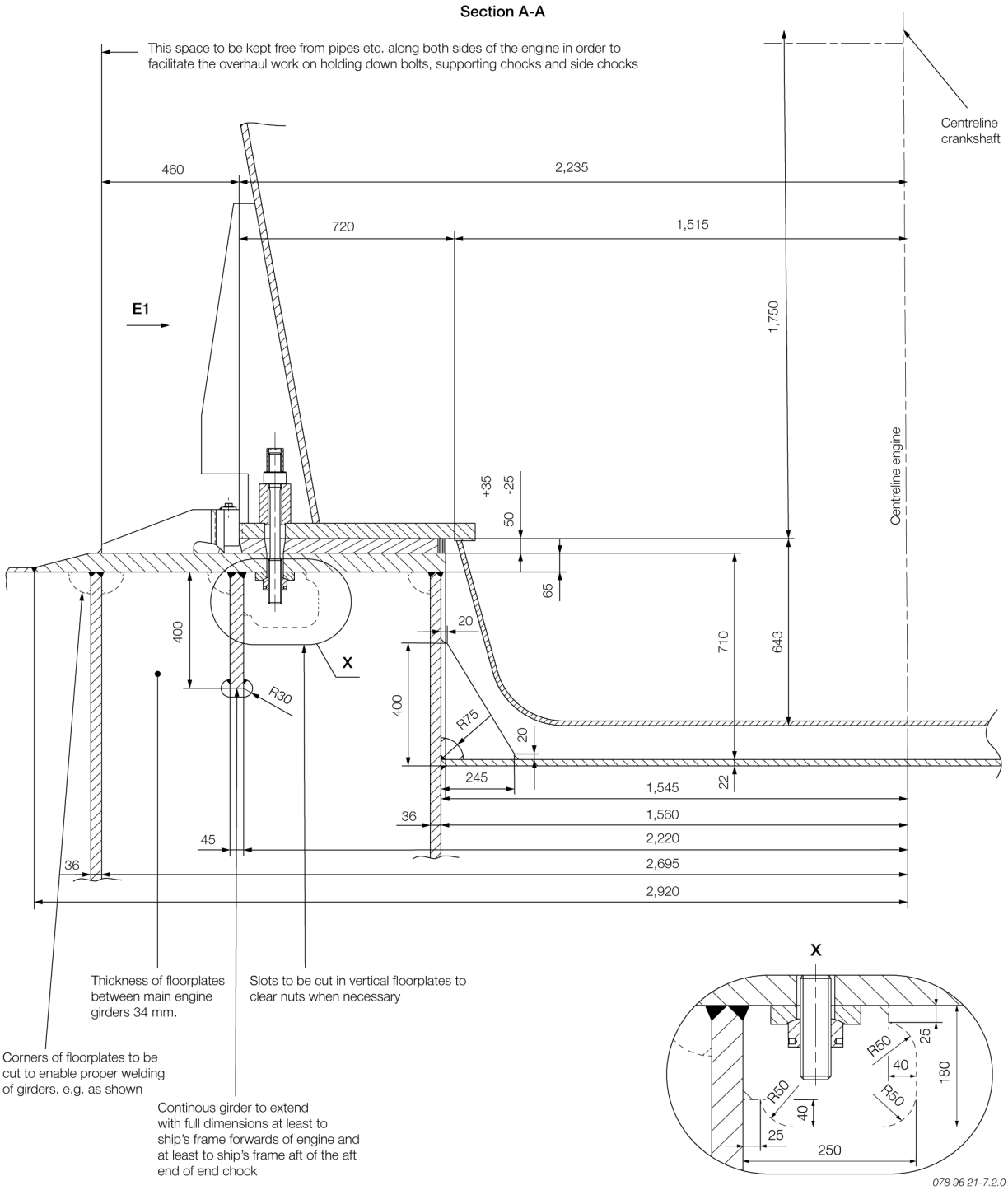

Holding down bolts

1. Protecting cap
2. Spherical nut
3. Spherical washer
4. Distance pipe
5. Round nut
6. Holding down bolt

Fig. 5.12.02a: Profile of engine seating with vertical lubricating oil outlet

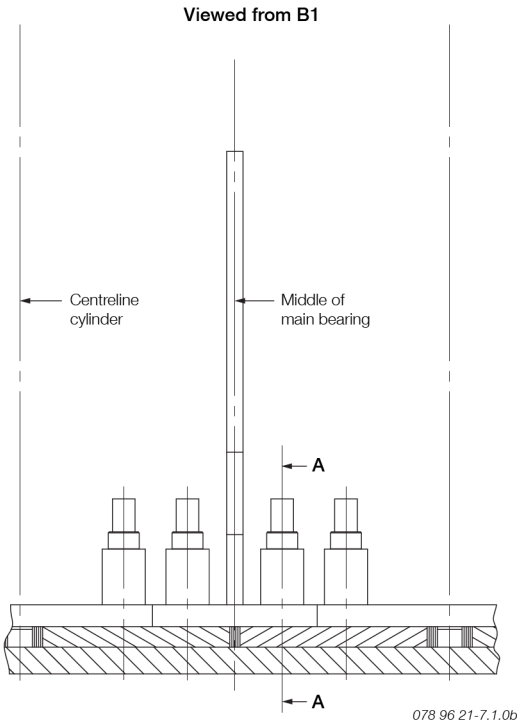

End chock bolts.

1. Stud for end chock bolt
2. Round nut
3. Round nut
4. Spherical washer
5. Spherical washer
6. Protecting cap
7. Liner for end chock
8. End chock bracket

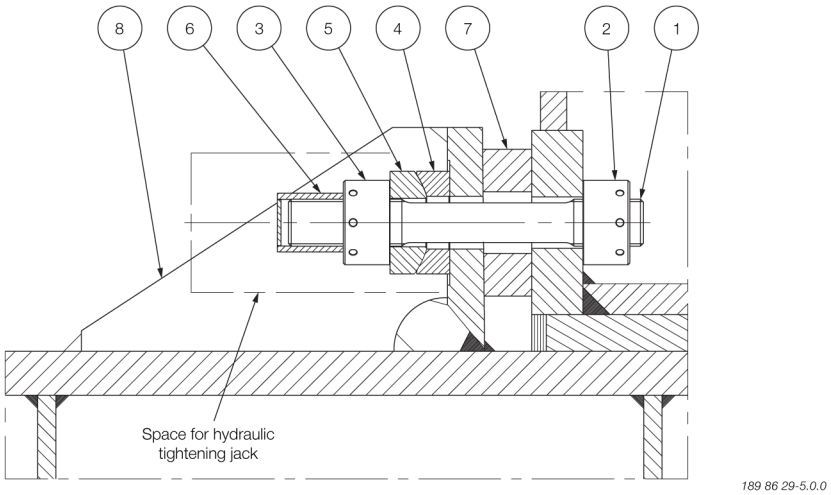

Fig. 5.12.02b: Profile of engine seating, end chocks.

Side chock brackets.

1. Side chock brackets

   Side chock liners

2. Liner for side chock
3. Lock plate
4. Washer
5. Hexagon socket set screw

Detail D1

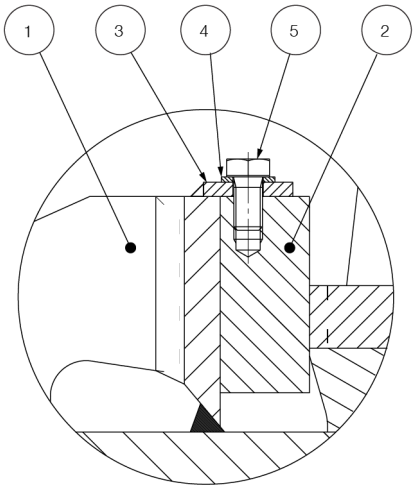

189 86 28-3.0.0

Fig. 5.12.02c: Profile of engine seating, side view, side chocks.

Engine top bracing

General

When the piston in a cylinder is not exactly in the top or bottom position (dead cntre), the gas force from the combustion transferred through the connecting rod has a component acting on the crosshead and the crankshaft. This component acts perpendicular to the axis of the cylinder. Its resultant acts on the guide shoe and together they form a guide force moment. In short, guide force moments are caused by transverse reaction forces acting on the crossheads due to the connecting rod and crankshaft mechanism.

The moments may excite engine vibrations, moving the engine top athwartships and causing a rocking (excited by H-moment) or twisting (excited by X-moment) movement of the engine. For engines with fewer than seven cylinders, this guide force moment tends to rock the engine in the transverse direction, and for engines with seven cylinders or more, it tends to twist the engine.

The guide force moments are harmless to the engine, except when resonance vibrations occur in the engine/double-bottom system. If proper countermeasures are not taken, the guide force moments may, however, cause annoying vibrations in the superstructure and/or engine room.

As a detailed calculation of this system is normally not available, Everllence recommends installing a top bracing between the upper platform brackets of the engine and the casing side.

However, a top bracing is not always needed, sometimes the vibration level is lower without the top bracing. Normally, this has to be checked by measurements, i.e., with and without top bracing.

If a vibration measurement on the first vessel in a series shows that the vibration level is acceptable without the top bracing, we have no objection to the top bracing being removed, and the rest of the series produced without top bracing. In our experience the seven cylinder engine will often have a lower vibration level without top bracing.

Without top bracing, the natural frequency of the vibrating system (engine, ship bottom and side structures) is often so low that resonance with the excitation source (the guide force moment) can occur close to the normal speed range. This will result in the risk of vibration.

With top bracing, resonance with the excitation source shifts above the normal speed range, as the natural frequencies of the double-bottom/main engine system will increase. As a result, the impact of vibration is lowered.

The top bracing system is installed either as a mechanical top bracing (typically on smaller engine types), or a hydraulic top bracing (typically on larger engine types). Both systems are described in the following.

Normally, the top bracing is installed on the exhaust side of the engine, but as an alternative, the hydraulic top bracing can be installed on the manoeuvring side. It is also possible to combine exhaust side and manoeuvring side installation of the hydraulic top bracing.

Mechanical top bracing

The mechanical top bracing comprises stiff connections between the engine and the hull.

The top bracing stiffener in Fig. 5.13.01 consists of a double bar tightened with friction shims at each end of the mounting positions. The friction shims allow the top bracing stiffener to move during displacements caused by thermal expansion of the engine, or different loading conditions of the vessel. Furthermore, to prevent overloading of the system during excessive vibration levels, tightening is made with a well-defined force on the friction shims using disc springs.

The shipyards makes the mechanical top bracing according to Everllence instructions.

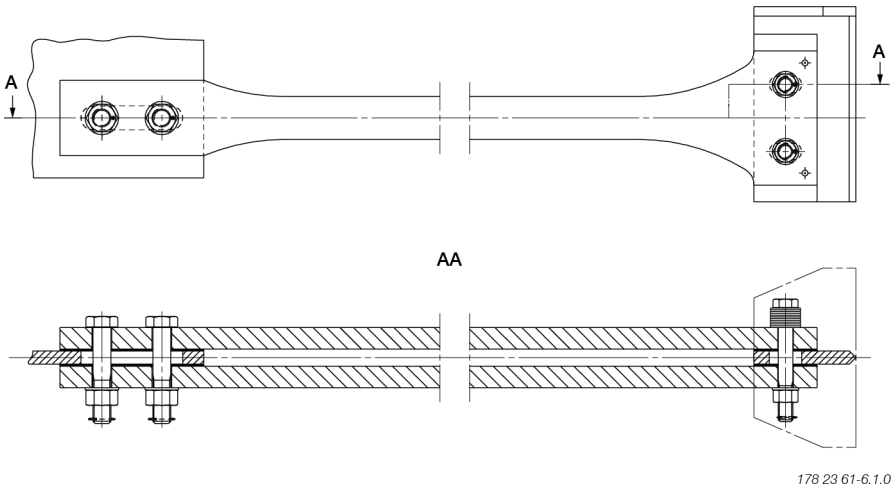

Fig. 5.13.01: Mechanical top bracing stiffener

Hydraulic top bracing

As an alternative to the mechanical top bracing, a hydraulic top bracing can be used, mainly on engines with a cylinder bore of 50 or more. The installation normally features two, four, or six independently working top bracing units.

The top bracing unit consists of a single-acting hydraulic cylinder with a hydraulic control unit and an accumulator mounted directly on the cylinder unit.

The top bracing is controlled by an automatic switch in a control panel, which activates the top bracing when the engine is running. The switch can be programmed to activate the top bracing in a specific RPM range. For service purposes, manual control from the control panel is also possible. The top bracing unit is designed to allow displacements between the hull and engine caused by thermal expansion of the engine, or different loading conditions of the vessel.

When active, the hydraulic cylinder provides a pressure on the engine in proportion to the vibration level. When the distance between the hull and engine increases, oil pressurised by the accumulator flows into the cylinder. When the distance decreases, a non-return valve prevents the oil from flowing back to the accumulator, and the pressure rises. When the pressure reaches a preset maximum value, a relief valve allows the oil to flow back to the accumulator, hereby maintaining the force on the engine below a specified value.

By using different pre-settings of the relief valve, the top bracing becomes available in a low-pressure version (26 bar) and a high-pressure version (40 bar).

Fig. 5.13.02 shows the outline of a hydraulic top bracing unit.

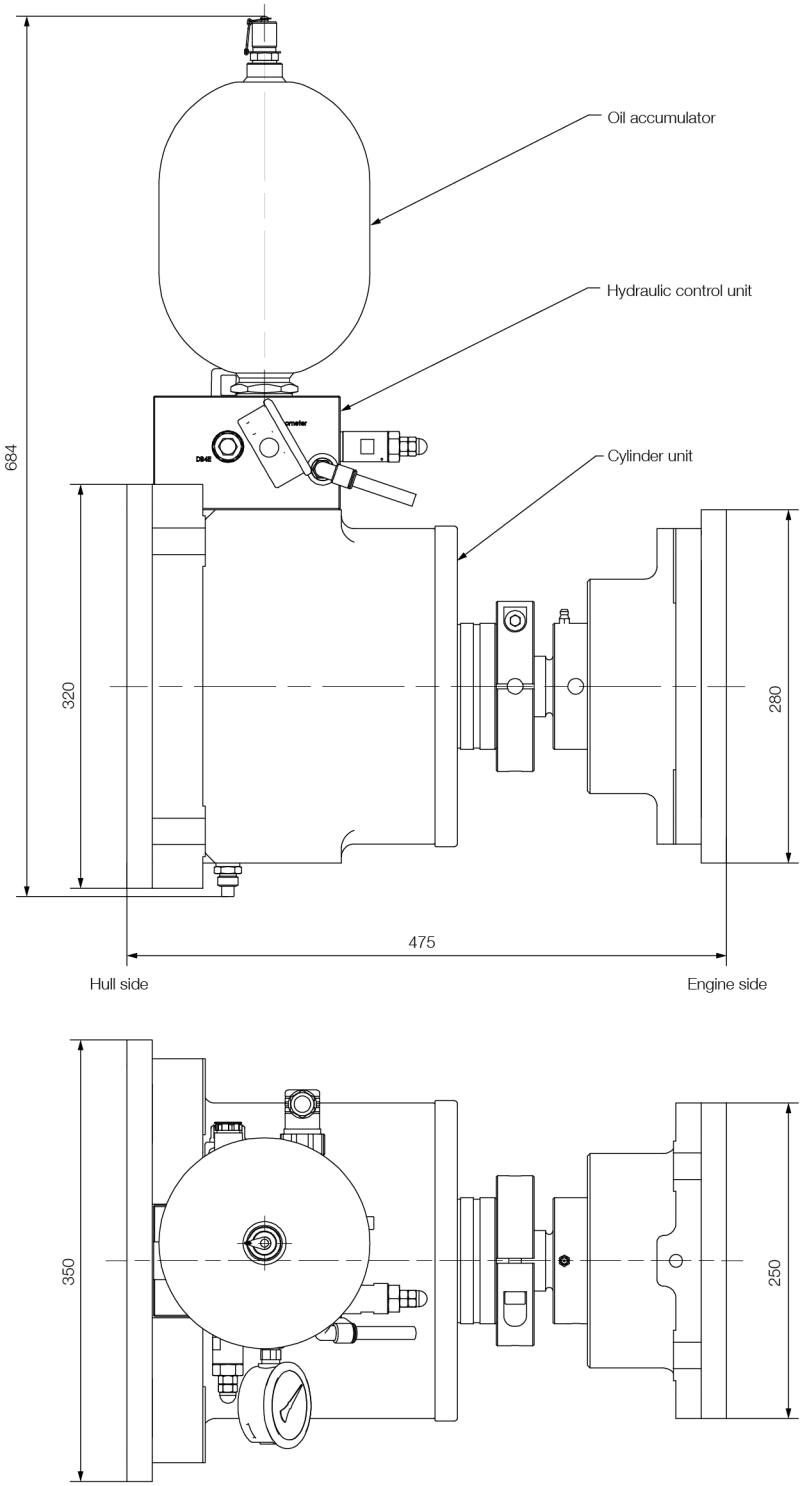

Fig. 5.13.02: Outline of a hydraulic top bracing unit, which can be installed with the oil accumulator pointing either up or down

This page is intentionally left blank

Mechanical top bracing - T III

General

This section is available on request

2026-01-23 - en

This page is intentionally left blank

Hydraulic top bracing arrangement - TIII

EGRBP

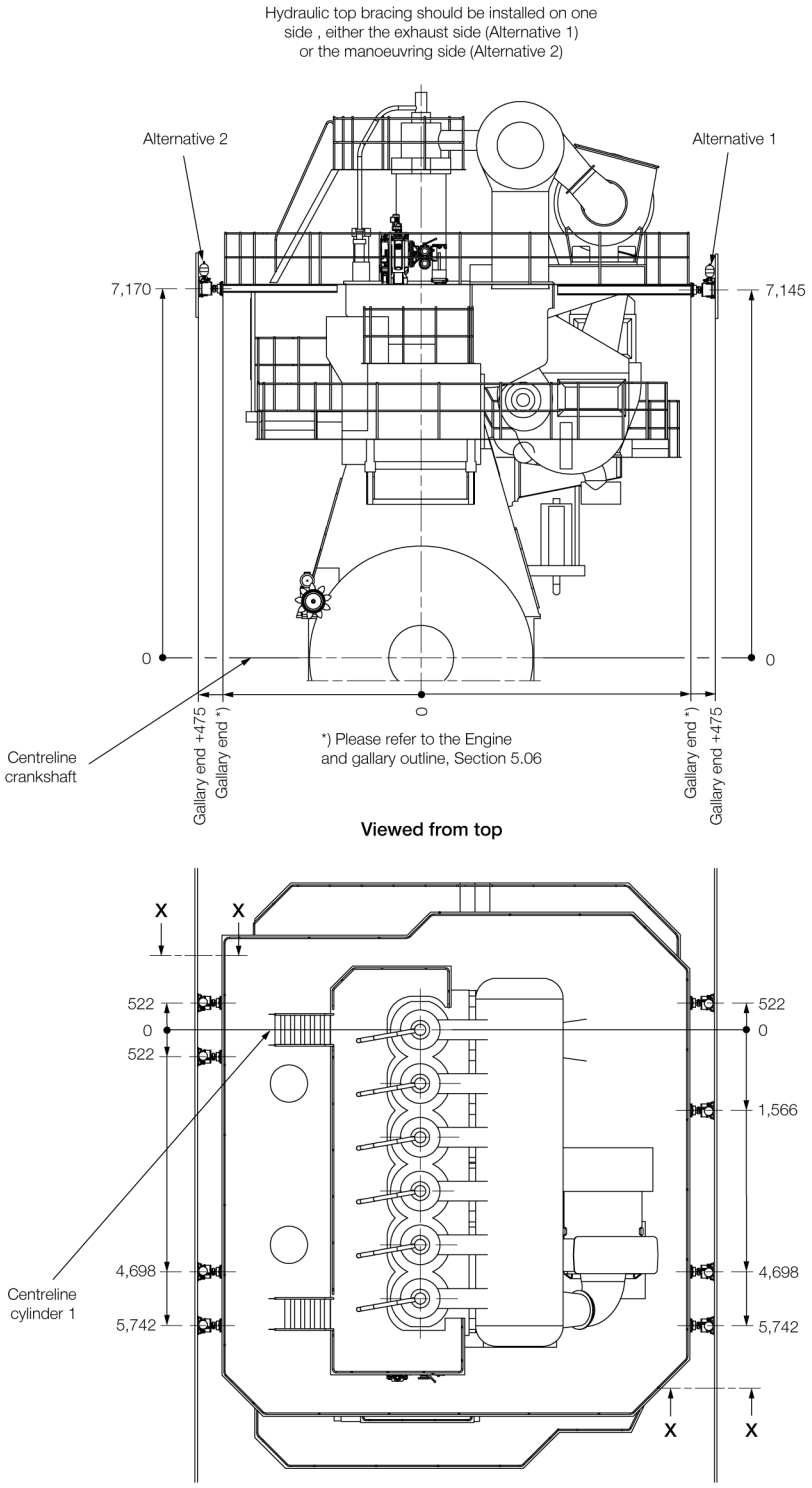

Note: All dimensions are in mm

078 96 31-3.6.0

Fig. 5.15.01: 6G70ME-C10.5-GI-EGRBP, Example of Hydraulic top bracing arrangement, with one turbocharger(s) mounted on the exhaust side

HPSCR

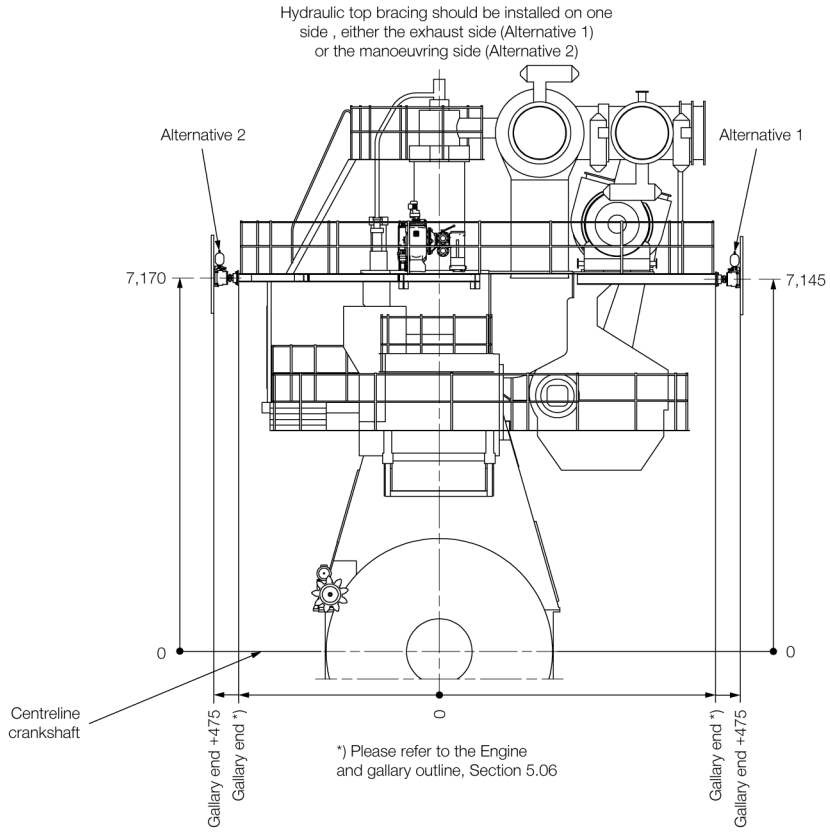

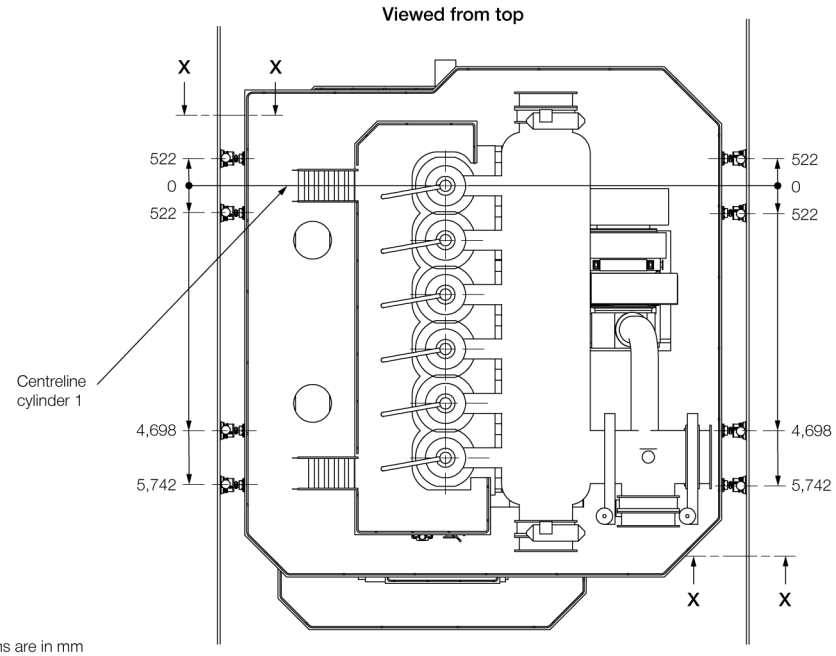

Note: All dimensions are in mm

596 20 77-2.5.0

Fig. 5.15.02: 6G70ME-C10.5-GI-HPSCR, Example of Hydraulic top bracing arrangement, with one turbocharger(s) mounted on the exhaust side

2026-01-01 - en

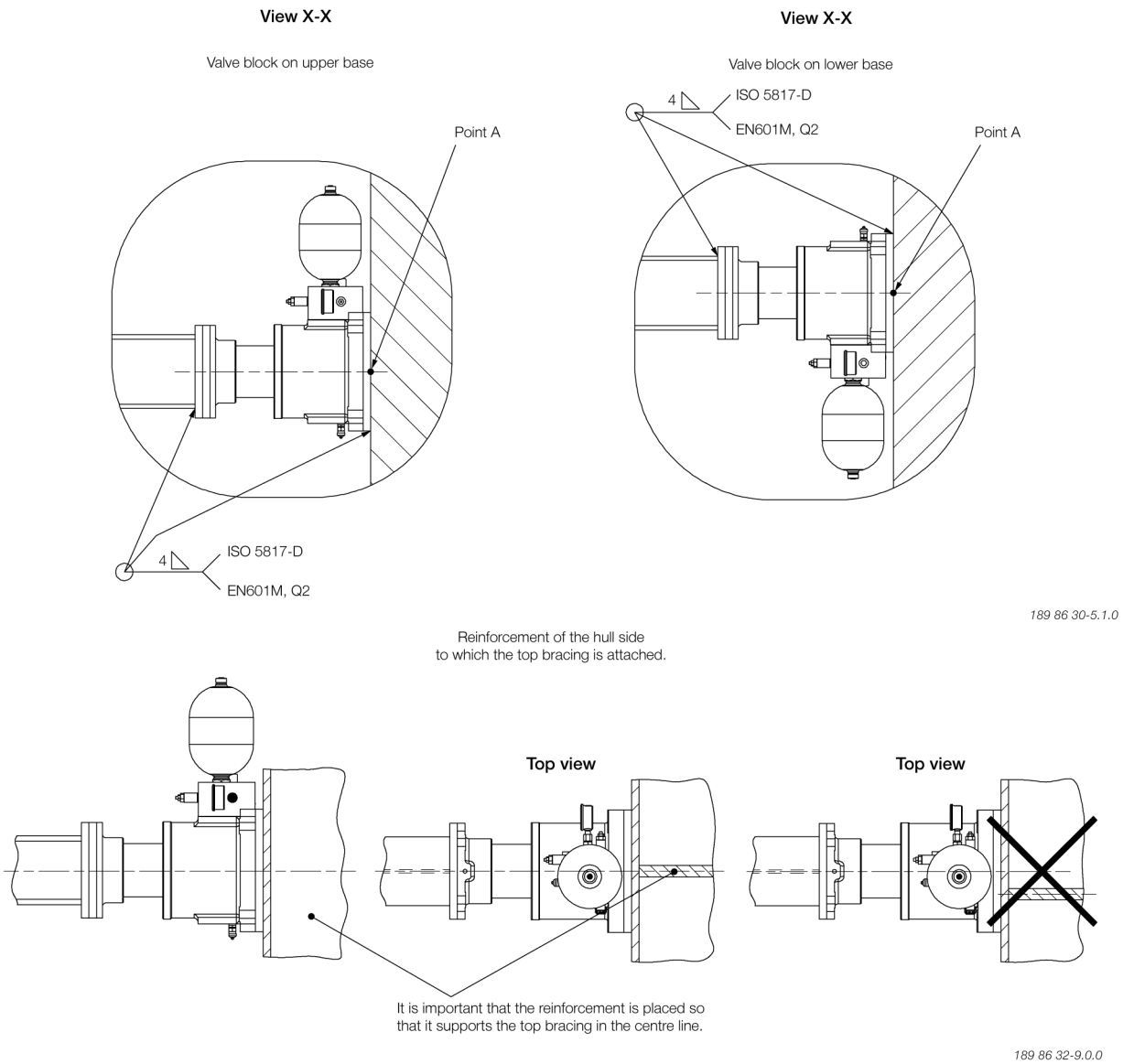

Fig. 5.15.03: Hydraulic top bracing data

As the rigidity of the casing structure to which the top bracing is attached is most important, it is recommended that the top bracing is attached directly into a deck.

Required rigidity of the casing side point A:

In the axial direction of the hydraulic top bracing:

Force per bracing: 127 kN

Maximum corresponding deflection of casing side: 0.51 mm

In the horizontal and vertical direction of the hydraulic top bracing:

Force per bracing: 22 kN

Maximum corresponding deflection of casing side : 2.00 mm

This page is intentionally left blank

Components for engine control system

Installation of ECS in the engine control room

The following items are to be installed in the ECR (Engine Control Room):

- 2 pcs EICU (Engine interface control unit)
  (1 pcs only for ME-B engines)
- 1 pcs ECS MOP-A (Main operating panel)
  EC-MOP with touch display, 15”
- 1 pcs ECS MOP-B
  EC-MOP with touch display, 15”
- 1 pcs EMS MOP with system software display,
  24” marine monitor PC unit
- 1 pcs Managed switch and VPN router with firewall

The EICU functions as an interface unit to ECR related systems such as AMS (alarm and monitoring system), RCS (Remote control system) and safety system. On ME-B engines the EICU also controls the HPS.

MOP-A and -B are redundant and are the operator’s interface to the ECS. Via both MOPs, the operator can control and view the status of the ECS. Via the EMS MOP PC, the operator can view the status and operating history of both the ECS and the engine, EMS is decribed in Section 18.01.

The PMI auto-tuning application is run on the EMS MOP PC. PMI auto-tuning is used to optimize the combustion process with minimal operator attendance and improve the efficiency of the engine. See Section 18.01.

CoCoS-EDS ME Basic is included as an application in the engine management services as part of the standard software package installed on the EMS MOP PC. See Section 18.01.

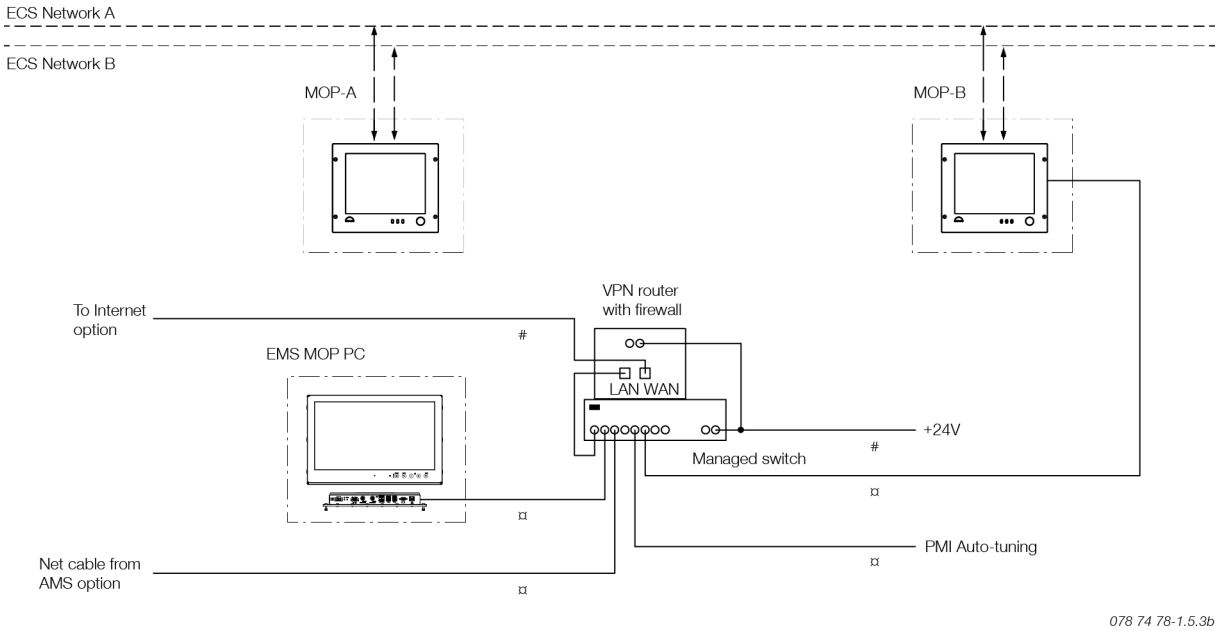

2025-10-17 - en

Abbreviations:		# Yard supply
AMS:	alarm monitoring systems	
EICU:	engine interface control unit	¤ Ethernet, 10 m patch cable supplied with switch. Type:
EMS:	engine management services	RJ45, STP (Shielded Twisted Pair), CAT 5.
MOP:	main operating panel	In case 10 m cable is not enough, this becomes Yard supply.

Fig. 5.16.01 Network and PC components for the ME/ME-B engine control system

EC-MOP

- Integrated PC unit and touch display, 15”
- Direct dimming control (0-100%)
- USB connections at front
- IP20 resistant front
- Dual Arcnet

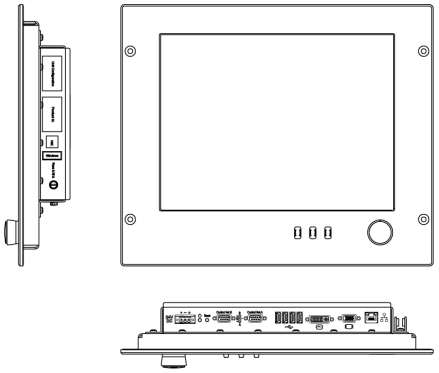

188 34 68-1.13.0

Pointing device

- Keyboard model
  - UK version, 104 keys
  - USB connection
- Trackball mouse
  - USB connection

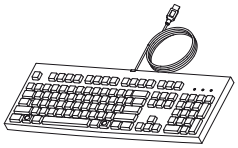

188 21 61-8.6.0

188 21 59-6.4.0

EMS MOP PC

- Standard industry PC with MS Windows
  operating system, UK version

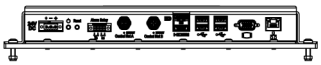

188 34 25-0.4.0

Marine monitor for EMS MOP PC

- LCD (MVA) monitor 24”
  - Projected capacitive touch
  - Resolution 1,920x1,080, WSXGA+
  - Direct dimming control (0-100%)
  - IP54 resistant front
  - For mounting in panel

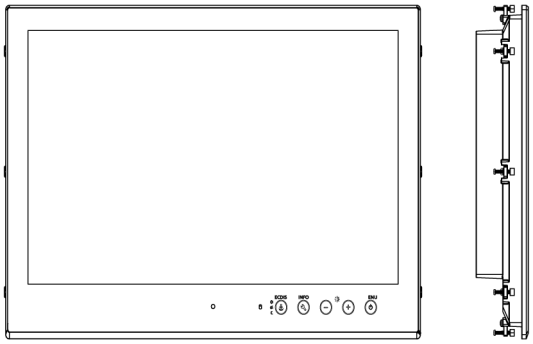

188 35 95-0.2.0

- Bracket for optional mounting on desktop, with hinges (5° tilt, adjustable 95°) or without hinges (10° tilt, not adjustable

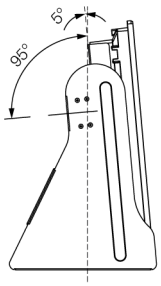

188 35 90-1.1.0

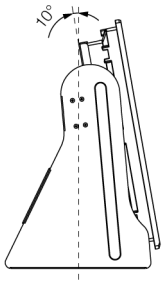

188 35 91-3.1.0

Network components

- Managed switch and VPN router with firewall

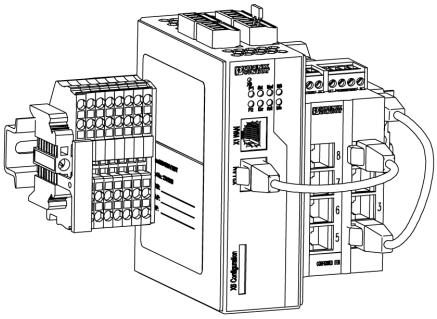

563 66 46-3.5.0

Fig. 5.16.02 MOP PC equipment for the ME/ME-B engine control system

2025-10-17 - en

EICU cabinet

- Engine interface control cabinet for ME-ECS for installation in ECR (recommended) or ER

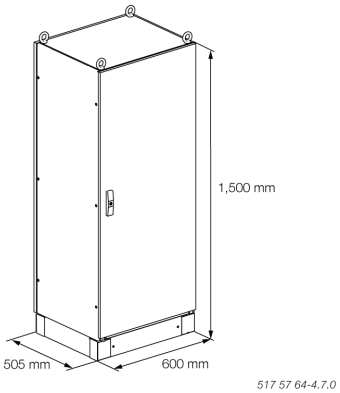

Fig. 5.16.03: The network printer and EICU cabinet unit for the ME engine control system

Engine control room console

- Recommended outline of Engine Control Room console with ME equipment

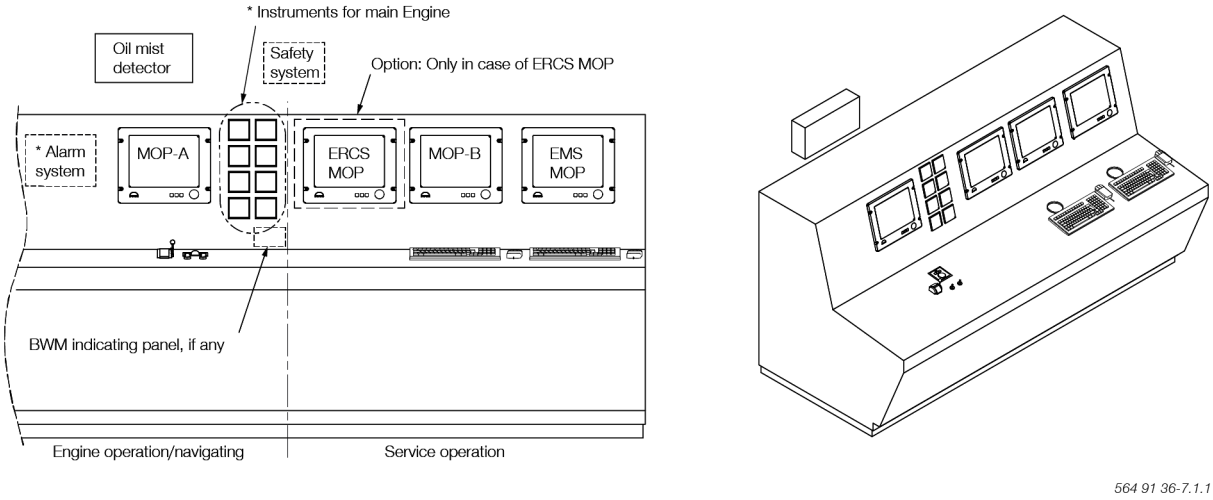

* Yard supply

Oil mist detector equipment depending on supplier/maker
BWM: Bearing wear monitoring

Fig. 5.16.04: Example of engine control room console

Shaftline earthing device

Scope and field of application

A difference in the electrical potential between the hull and the propeller shaft will be generated due to the difference in materials and to the propeller being immersed in sea water.

In some cases, the difference in the electrical potential has caused spark erosion on the thrust, main bearings and journals of the crankshaft of the engine.

In order to reduce the electrical potential between the crankshaft and the hull and thus prevent spark erosion, a highly efficient shaftline earthing device must be installed.

The shaftline earthing device should be able to keep the electrical potential difference below 50 mV DC. A shaft-to-hull monitoring equipment with a mV-meter and with an output signal to the alarm system must be installed so that the potential and thus the correct function of the shaftline earthing device can be monitored.

Note that only one shaftline earthing device is needed in the propeller shaft system.

2023-10-26 - en

Design description

The shaftline earthing device consists of two silver slip rings, two arrangements for holding brushes including connecting cables and monitoring equipment with a mV-meter and an output signal for alarm.

The slip rings should be made of solid silver or back-up rings of copper with a silver layer all over. The expected life span of the silver layer on the slip rings should be minimum 5 years.

The brushes should be made of minimum 80% silver and 20% graphite to ensure a sufficient electrical conducting capability.

Resistivity of the silver should be less than 0.1µ Ohm x m. The total resistance from the shaft to the hull must not exceed 0.001 Ohm.

Cabling of the shaftline earthing device to the hull must be with a cable with a cross section not less than 45 mm^2. The length of the cable to the hull should be as short as possible.

Monitoring equipment should have a 4-20 mA signal for alarm and a mV-meter with a switch for changing range. Primary range from 0 to 50 mV DC and secondary range from 0 to 300 mV DC.

When the shaftline earthing device is working correctly, the electrical potential will normally be within the range of 10-50 mV DC depending of propeller size and revolutions.

The alarm set-point should be 80 mV for a high alarm. The alarm signals with an alarm delay of 30 seconds and an alarm cut-off, when the engine is stopped, must be connected to the alarm system.

Connection of cables is shown in the sketch, see Fig. 5.17.01.

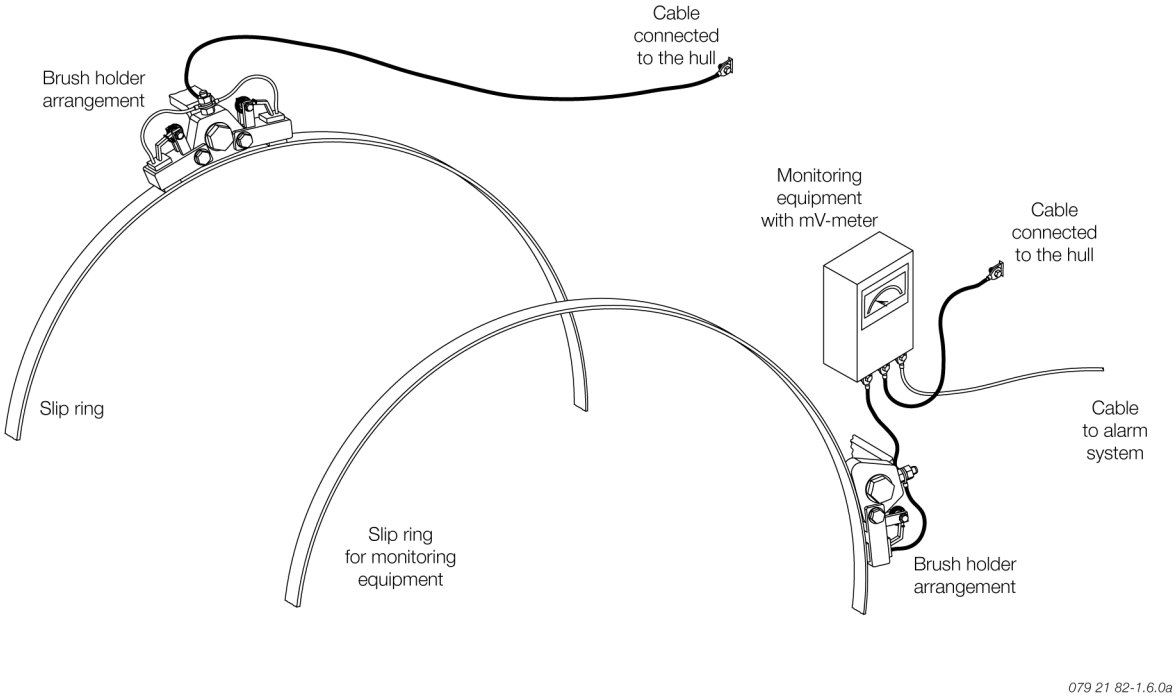

Fig. 5.17.01: Connection of cables for the shaftline earthing device

2023-10-26 - en

Shaftline earthing device installations

The shaftline earthing device slip rings must be mounted on the foremost intermediate shaft as close to the engine as possible, see Fig. 5.17.02

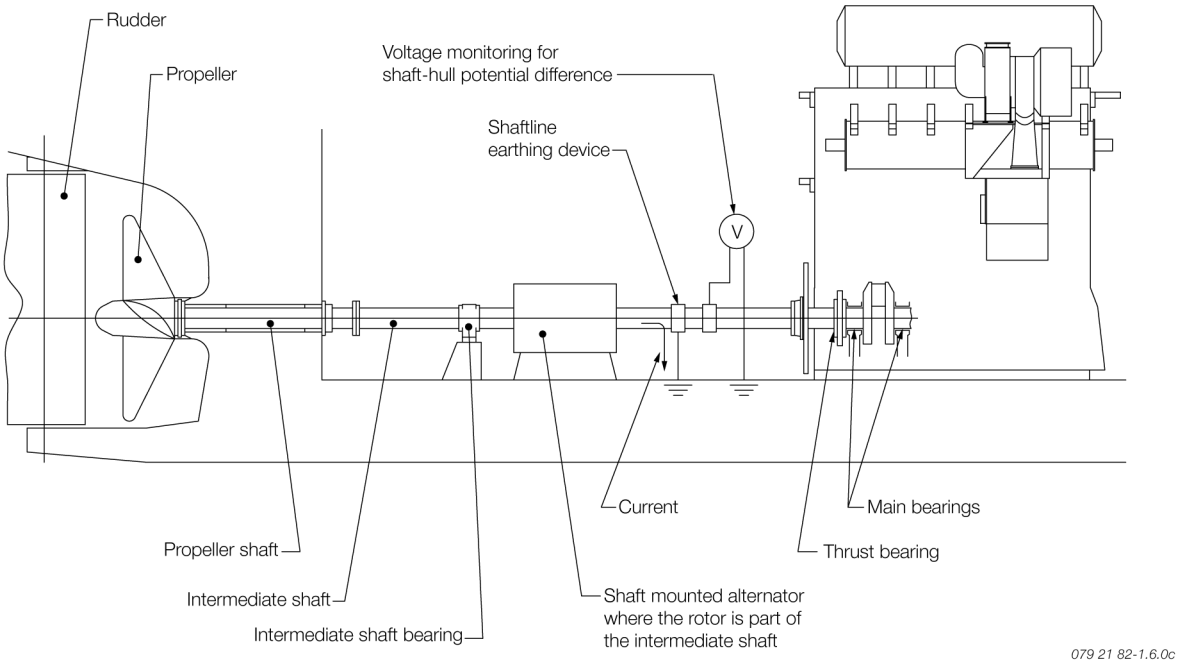

Fig. 5.17.02: Installation of shaftline earthing device in an engine plant without shaft-mounted generator

When a generator is fitted in the propeller shaft system, where the rotor of the generator is part of the intermediate shaft, the shaftline earthing device must be mounted between the generator and the engine, see Fig. 5.17.03

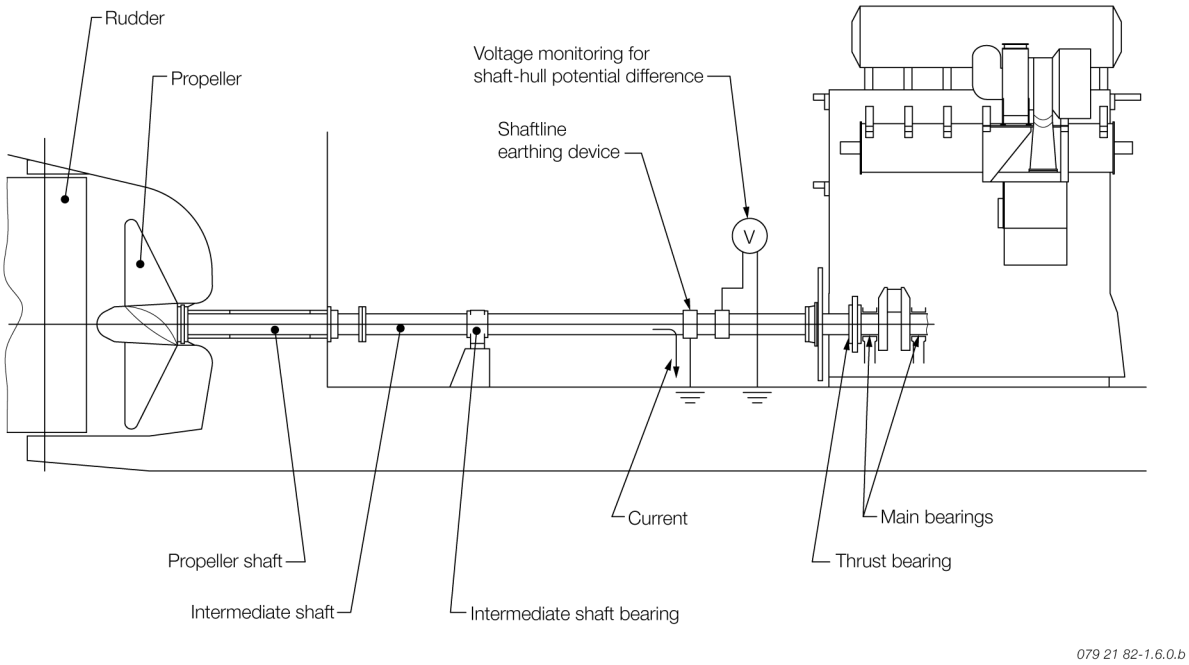

Fig. 5.17.03: Installation of shaftline earthing device in an engine plant with shaft-mounted generator

2023-10-26 - en

This page is intentionally left blank

2023-10-26 - en

Alpha CPP and Alphatronic propulsion control

Alpha controllable pitch propeller

On Everllence's Alpha VBS type controllable pitch (CP) propeller, the propeller hub contains a hydraulic servomotor which sets the pitch.

A range of different propeller hub sizes is available to select an optimum hub for any given combination of engine power and revolution, and ice class of the vessel.

VBS type CP propeller designation and range

The VBS type CP propellers are designated according to the diameter of their hubs, for example ‘VBS2150’ which indicates a propeller hub diameter of 2,150 mm.

Fig. 5.18.01 shows the standard VBS type CP propeller programme, the propeller diameters and the engine power range covered.

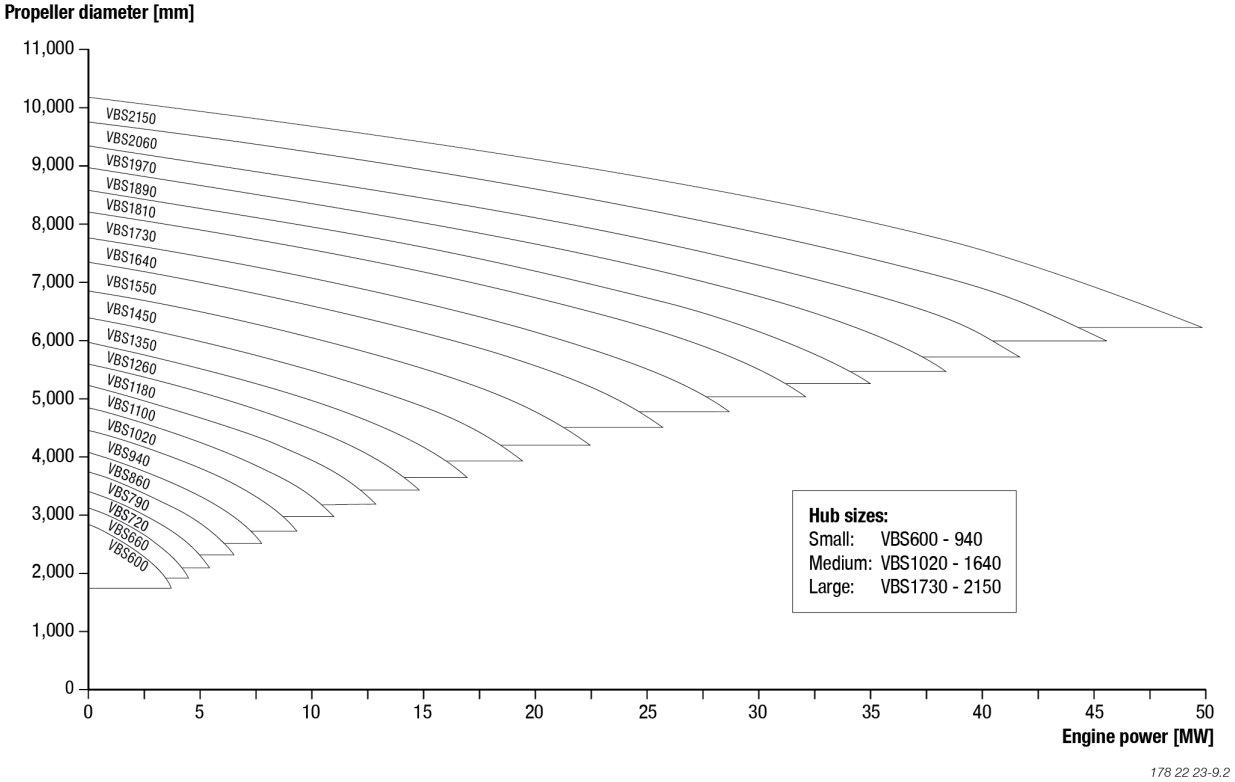

Fig. 5.18.01: Range of Alpha controllable pitch propellers type VBS Mk 5

As standard VBS Mk 5 versions are four-bladed but five-bladed versions are available on request. The standard blade and hub materials are Ni-Al-bronze, with stainless steel available as an option. The propellers are based on no ice class but are available up to the highest ice classes.

The servo oil system controlling the setting of the propeller blade pitch is discussed in the later Section 'Servo oil system for VBS type CP propeller'.

2025-07-03 - en

Data sheet for propeller

Fig. 5.18.02 and Table 5.18.01 define the dimensions and information necessary for propeller design purposes.

Identification: _____

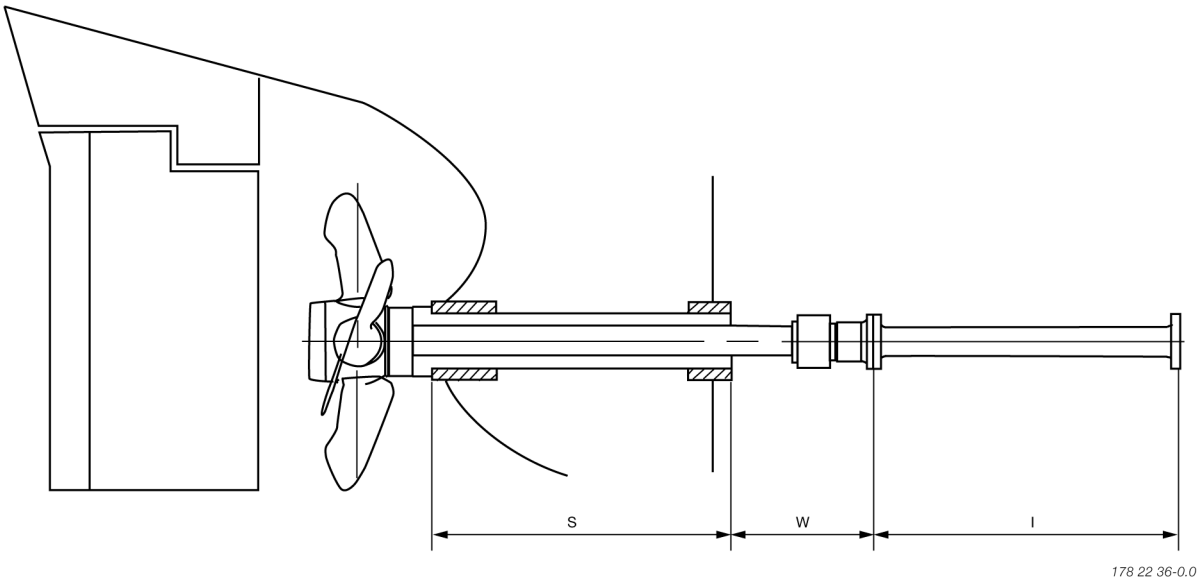

Fig. 5.18.02: Dimension sketch for propeller design purposes

For propeller design purposes, provide us with the following information:

Type of vessel: _____

1.	S: (See Fig. 5.18.02)	_____ mm
	W: (See Fig. 5.18.02)	_____ mm
	I: (See Fig. 5.18.02)	_____ mm
2.	Stern tube and shafting arrangement layout	
3.	Propeller aperture drawing	
4.	Complete set of reports from model tank tests (resistance test, self propulsion test and wake measurement). If a model test is not available, fill inTable 5.18.02 with main dimensions	
5.	Drawing of lines plan	
6.	Classification society:	_____
	Ice class notation:	_____
7.	Maximum rated power of shaft generator:	_____ kW
8.	Optimisation condition for the propeller: To obtain the highest propeller efficiency, state the most common service condition for the vessel.	
	Ship speed:	_____ kn
	Engine service load:	_____ %

2025-07-03 - en

	Service/sea margin:	_____ %
	Shaft generator service load:	_____ kW
	Draft:	_____ m
9.	Comments:	_____

Table 5.18.01: Data sheet for propeller design purposes

Main dimensions

If a model test is not available, fill in Table 5.18.02 which contains an additional data sheet for propeller design purposes.

	Symbol	Unit	Ballast	Loaded
Length between perpendiculars	LPP	m		
Length of load water line	LWL	m		
Breadth	B	m		
Draft at forward perpendicular	TF	m		
Draft at aft perpendicular	TA	m		
Displacement	o	m^3		
Block coefficient (LPP)	CB			
Midship coefficient	CM			
Waterplane area coefficient	CWL			
Wetted surface with appendages	S	m^2		
Centre of buoyancy forward of LPP/2	LCB	m		
Propeller centre height above baseline	H	m		
Bulb section area at forward perpendicular	AB	m^2		

178 22 97-0.0

Table 5.18.02: Additional data sheet for propeller design purposes when a model test is not available

2025-07-03 - en

Propeller clearance

To reduce pressure impulses and vibrations emitted from the propeller to the hull, Everllence recommends a minimum tip clearance as shown in Fig. 5.18.03.

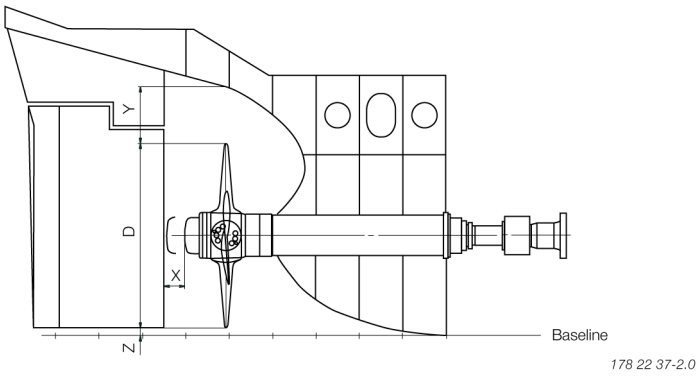

Fig. 5.18.03: Propeller clearance

For ships with slender aft body and favourable inflow conditions, use the lower values of Table 5.18.03, whereas for ships with full aft body and large variations in wake field, the upper values have to be used.

In twin-screw ships, the blade tip may protrude below the base line.

Hub Dismantling of cap X [mm]		High-skew propeller Y [mm]	Non-skew propeller Y [mm]	Baseline clearance Z [mm]
VBS 860	170	15-20% of D	20-25% of D	Min. 50-100
VBS 940	185			
VBS 1020	200			
VBS 1100	215			
VBS 1180	230			
VBS 1260	245			
VBS 1350	265			
VBS 1460	280			
VBS 1550	300			
VBS 1640	320			
VBS 1730	340			
VBS 1810	355			
VBS 1890	370			
VBS 1970	385			
VBS 2060	405			
VBS 2150	425			

Table 5.18.03: Clearances

2025-07-03 - en

Servo oil system for VBS type CP propeller

Fig. 5.18.04 shows the design principle of the servo oil system for Everllence's Alpha VBS type CP propeller.

The VBS system consists of a servo oil tank unit, which is the hydraulic power unit, and coupling flange with electrical pitch feedback box and oil distributor ring.

The electrical pitch feedback box continuously measures the position of the pitch feedback ring and compares this signal with the pitch order signal.

If a deviation occurs, a proportional valve is actuated. Hereby, high-pressure oil is fed to one or the other side of the servo piston via the oil distributor ring, until the desired propeller pitch has been reached.

The pitch setting is normally remote controlled, but local emergency control is possible.

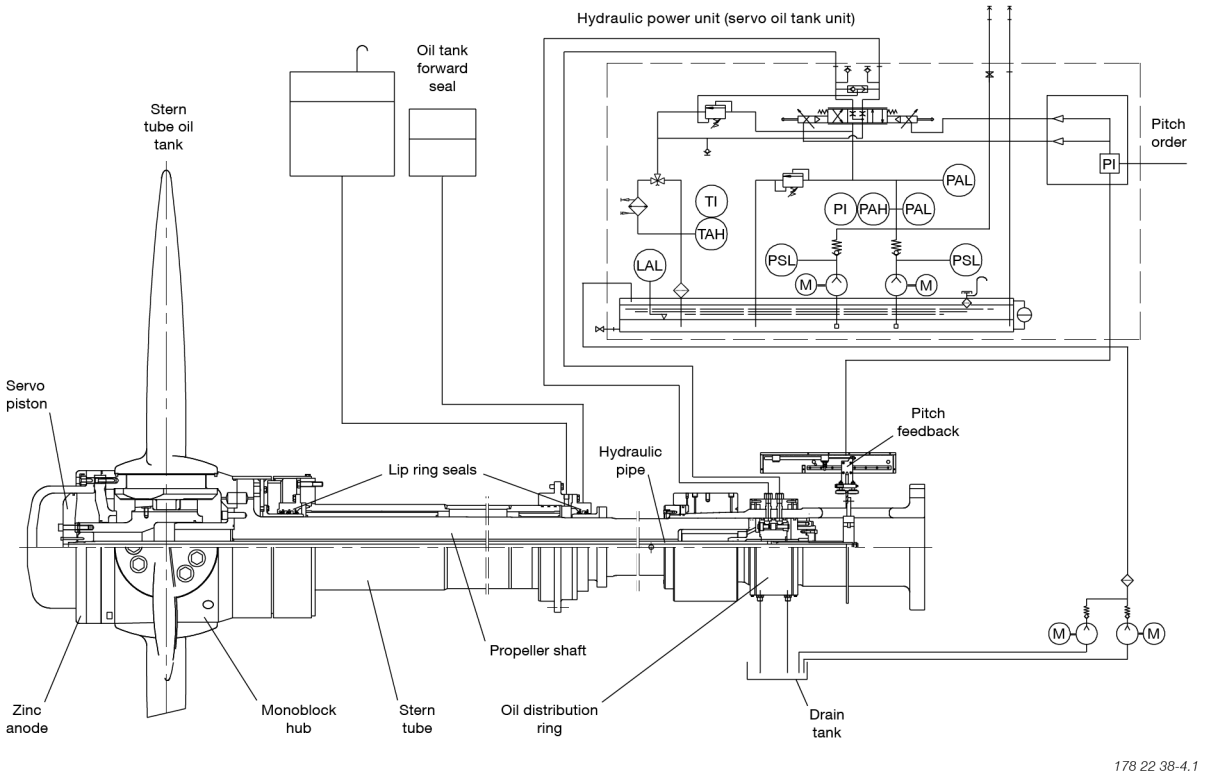

Fig. 5.18.04: Servo oil system for Alpha VBS type CP propeller

Hydraulic power unit

The servo oil tank unit is the hydraulic power unit for Everllence's Alpha CP propeller.

The servo oil tank unit in Fig. 5.18.05 consists of an oil tank with all components mounted on top to facilitate installation at the yard.

2025-07-03 - en

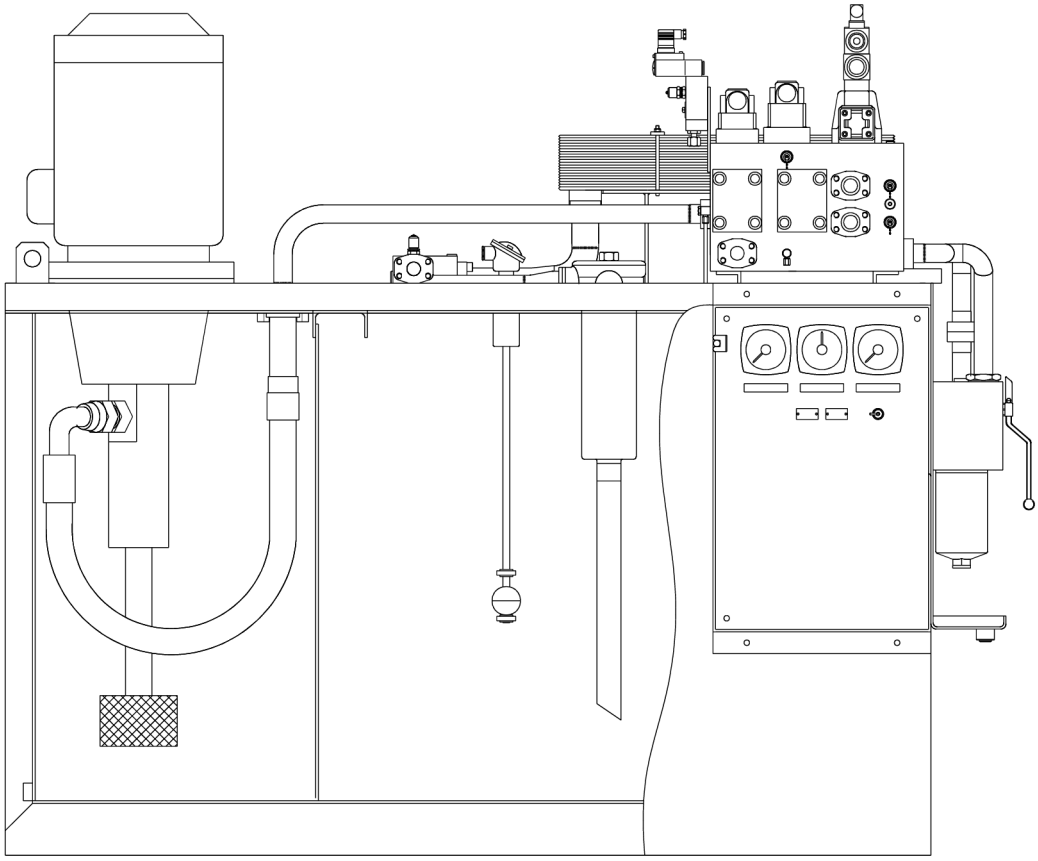

178 22 39-6.0.0

Fig. 5.18.05: Hydraulic power unit for Alpha CP propellers

Two electrically driven pumps draw oil from the oil tank through a suction filter and deliver high-pressure oil to the proportional valve.

One of two pumps will be in service during normal operation, while the second will start up at powerful manoeuvring.

A servo oil pressure adjusting valve ensures minimum servo oil pressure at any time, hereby minimising the electrical power consumption.

The maximum system pressure is set on the safety valve.

Return oil is led back to the tank via a thermostatic valve, cooler and paper filter.

The servo oil unit is equipped with alarms according to requirements of classification societies and necessary pressure and temperature indicators.

If the servo oil unit cannot be placed so that there is a maximum oil level below the oil distribution ring, the system must incorporate an extra, small drain tank complete with pump. This drain tank must be placed at a suitable level, below the oil distributor ring drain lines.

2025-07-03 - en

Alphatronic 3000 propulsion control system

Description

The system offers three levels of propulsion control:

- 'Normal control' with automatic load control

- 'Backup control' from bridge and ECR
- Independent telegraph system for communicating from the bridge to the machinery space.

The system is based on a modular panel design concept to elegantly fit any ship console layout. A configurable touch screen in the propulsion control panel meets a wide range of customer specific functions.

A thrust command can be issued in different control levels from the propulsion control station: In 'Normal control' from the control lever in a handle panel, in 'Backup control' as an order from one of the display panels, or indirectly via telegraph orders from a navigator on the bridge to an engineer in the machinery space.

Controllable pitch propeller applications

In single and twin propeller installations, applications with non-reversible two-stroke low speed engines are controlled by the Alphatronic 3000 system. The system comprises remote start and stop of engines from the display panels, and control of engine speed from the handle panel, see Fig. 5.18.06.

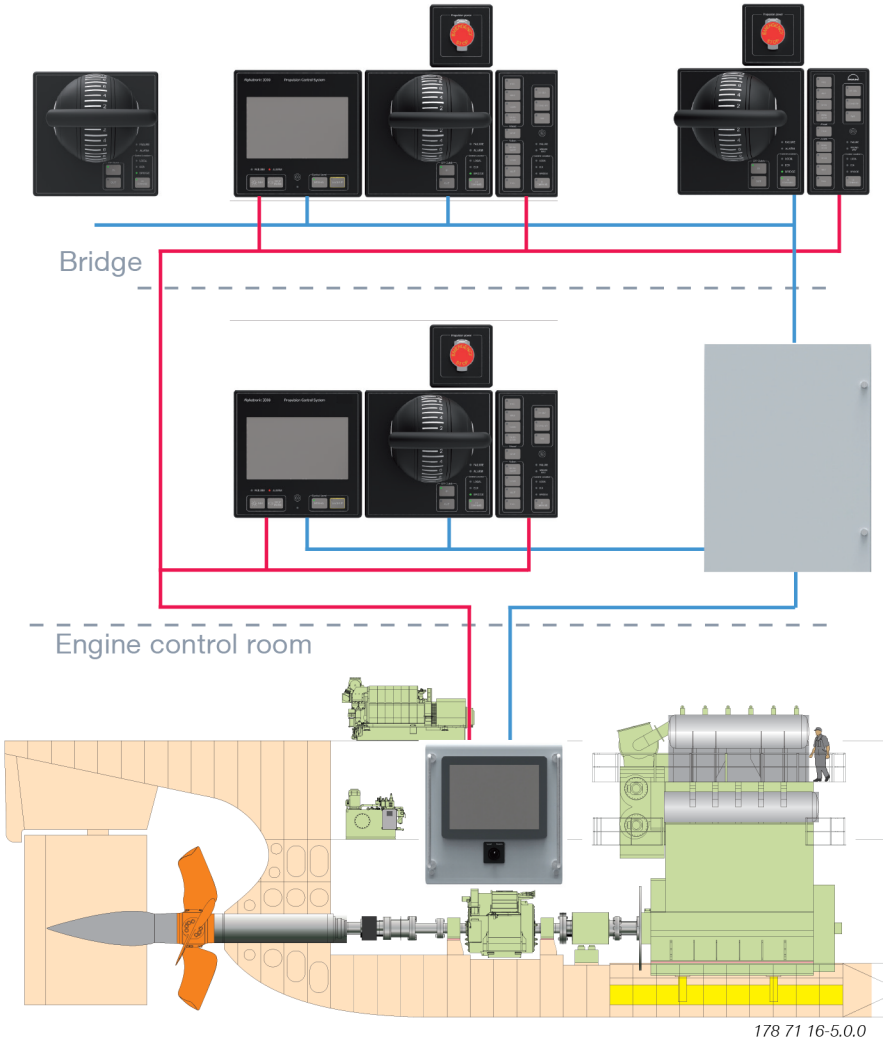

Fig. 5.18.06: Control system architecture – two-stroke propulsion package example with CP propeller

Bridge control station layout for a single propeller plant

Fig. 5.18.07 shows the bridge control station layout, including the different panels, for a single CP propeller plant.

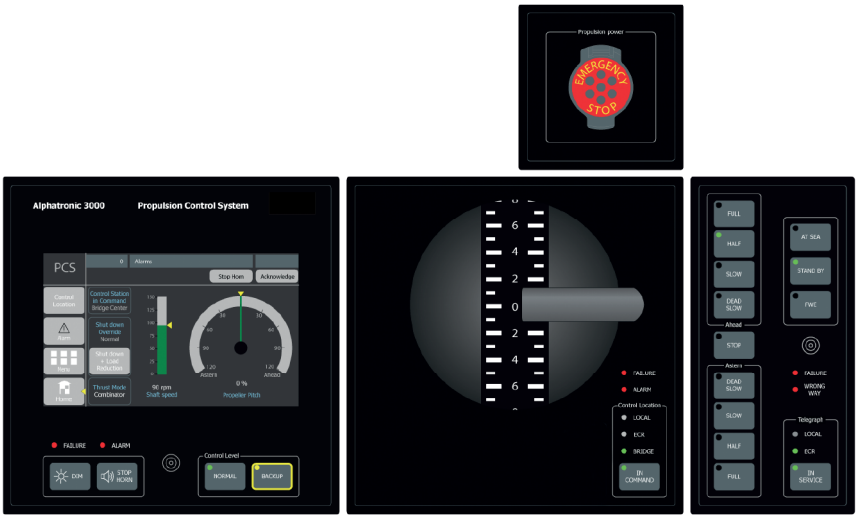

178 71 17-7.0.0

Fig. 5.18.07: Bridge control station layout with propulsion control panel, manoeuvre handle panel, emergency stop panel and telegraph order panel

Manoeuvre handle panels

The manoeuvre handle panel (MHP) in Fig. 5.18.08 is the primary control device for the main propeller.

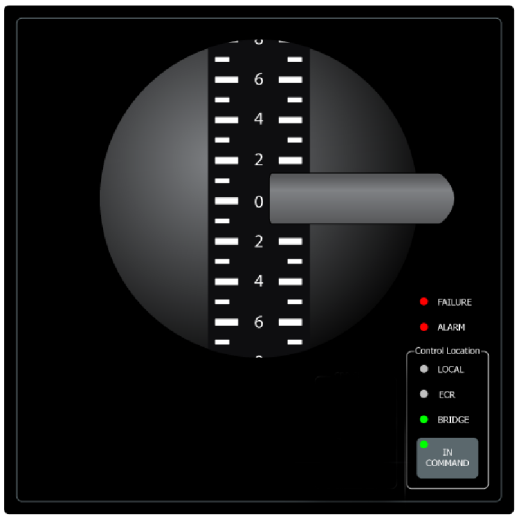

178 71 18-9.0.0

Fig. 5.18.08: Single-handle version – MHP – for CPP plants

The panel is always located on the ship's bridge, normally also in the ECR, and optionally on the bridge wings and aft bridge. A control station will comprise one, and only one, manoeuvre handle panel in a suitable version for the actual propulsion plant. The stepper motor(s) of the MHP is built into the spherically shaped handle body - requiring very limited installation space and console depth, see Fig. 5.18.08.

On CPP plants, the lever will control thrust and thrust direction via speed and pitch settings.

The single-handle panel is used for single propeller applications, and the double-handle panel shown in Fig. 5.18.09 is used for twin-propeller plants. The double-handle version is for independent control of the two shaft lines via two separate electric circuits.

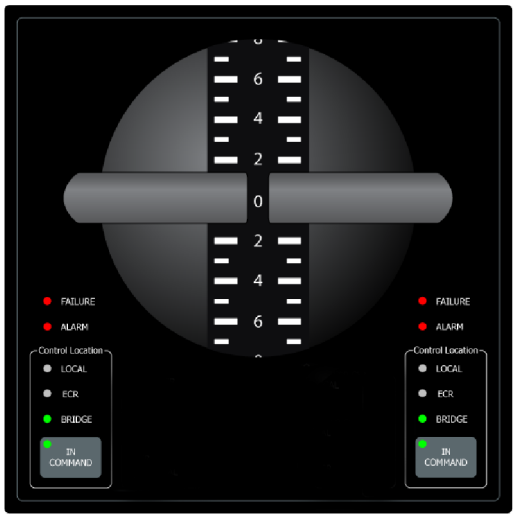

178 71 19-0.0.0

Fig. 5.18.09: Double-handle version – MHP – for CPP plants

All handles comprise a stepper motor for alignment (electric shaft system) of the levers according to the commands from the lever in command.

Propulsion control panel

The propulsion control panel (PCP) comprises a touch screen with soft keys for handling transfer of control responsibility and setup of propulsion power. In addition to propulsion setup, the display handles general monitoring and alarms for the propulsion control system, see Fig. 5.18.10.

178 71 20-0.0.0

Fig. 5.18.10: Propulsion control panel – PCP – for CPP plants

2025-07-03 - en

The control function in the engine safety system related to ‘shutdown’ and ‘load reduction’ is also available in the display panel. One PCP per propeller shaft must be available on the bridge control location and in the ECR.

The PCP provides two levels of control. ‘Normal control’ with thrust commands from the selected manoeuvre handle and ‘Backup control’ with thrust commands from a soft key menu in the display panel. The PCP can be selected for all bridge control stations, if a setup of propulsion power is necessary on other bridge control stations besides the main control station on the bridge centre.

Telegraph order panel

The telegraph order panel (TOP) in Fig. 5.18.11 operates independent of the propulsion remote control system.

178 71 21-2.0.0

Fig. 5.18.11: Telegraph order panel (TOP)

According to SOLAS requirements, at least one telegraph panel per propeller shaft must be available on the bridge control location and in the ECR. However, the telegraph panel can be placed on any bridge control station where the telegraph order communication is expected to be relevant.

The telegraph can be used for issuing orders from the bridge to the machinery space independent of the propulsion remote control system. In the ECR, control telegraph orders are available in control level ‘Normal’ and ‘Backup’. If local control is chosen in the engine room, the telegraph panel is connected to the local operating panel in the engine room (CPP only) used for telegraph order acknowledgement and setting of corresponding local thrust commands.

Local operating panel with telegraph

The local operating panel for the propeller (LOP-P) is located in the engine room close to the local operating panel for the engine. In addition to local control and monitoring functionality for the propeller system, the panel is used for telegraph order acknowledgement, see Figs. 5.18.12 and 5.18.13.

178 71 22-4.0.0

Fig. 5.18.12: LOP-P with telegraph receiver and propeller pitch control

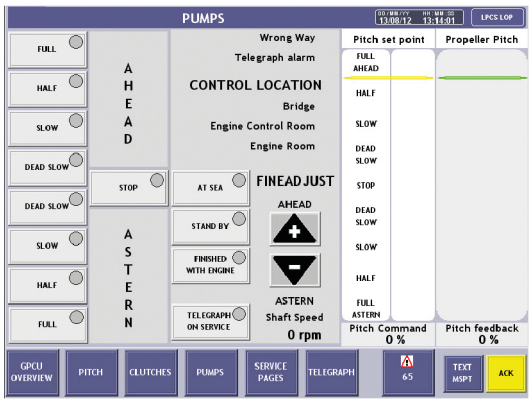

178 71 23-6.0.0

Fig. 5.18.13: Zooming in on the LOP-P display shows the additional submenus available, for example for monitoring bearing temperatures in stern tube and intermediate shaft line

Emergency stop panel

The function of the propulsion power emergency stop panel (ESP) in Fig. 5.18.14 is totally independent of the propulsion remote control system.

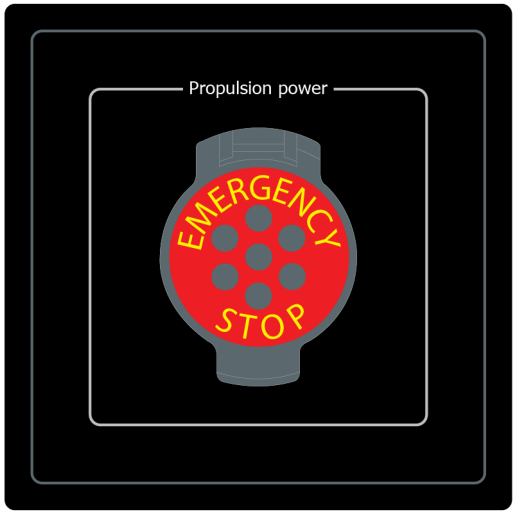

178 71 26-1.0.0

Fig. 5.18.14: Emergency stop panel - ESP

According to regulations, at least one emergency stop panel per propeller shaft must be available on the bridge control location and in the ECR. For safety reasons, it is recommended to incorporate an emergency stop panel on all control stations.

Control station for engine control room

The control station configuration comprises a display panel, a handle panel, a telegraph panel and an emergency stop panel, see Fig. 5.18.15.

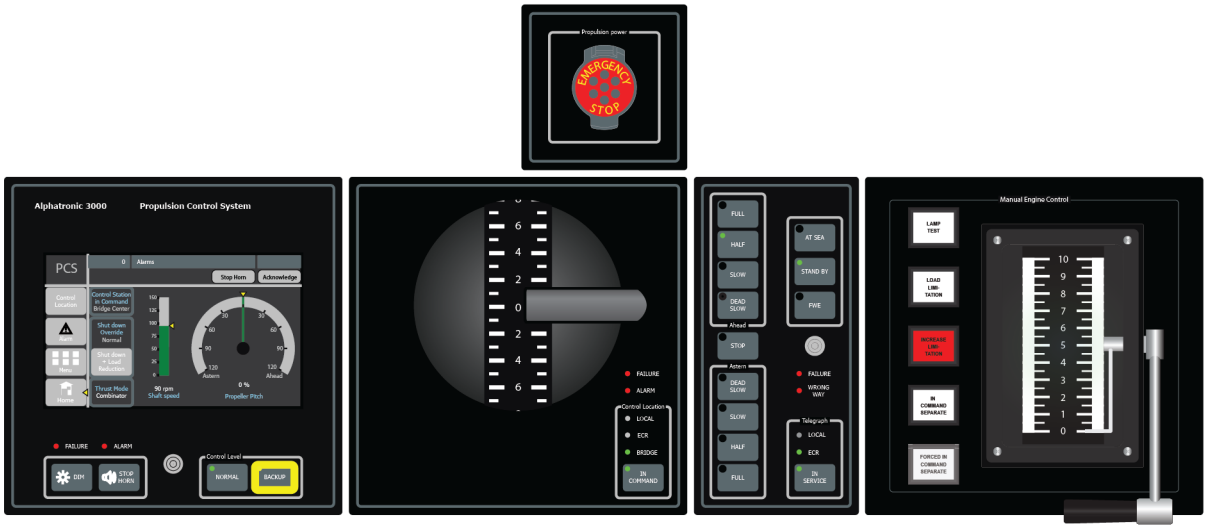

178 71 27-3.0.0

Fig. 5.18.15: ECR control station with optional EHP panel for a two-stroke engine with CP propeller

For two-stroke low speed engines, an additional optional engine handle panel (EHP) can be added for independent start, stop and speed setting of the engine from the ECR, see Fig. 5.18.16.

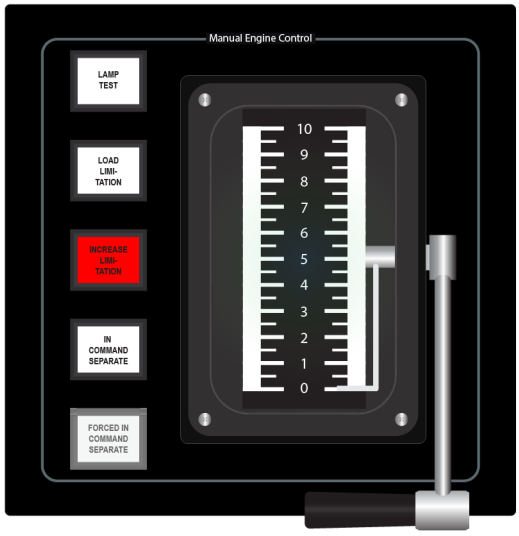

178 71 28-5.0.0

Fig. 5.18.16: Two-stroke engine handle panel – EHP

The EHP comprises basic control functions: a push button for command take-over, and lever for engine start, stop and speed setting.

Further information

For further information and details of the many options available from the Alphatronic 3000 propulsion control systems - see our publication: https://www.everllence.com/docs/default-source/document-sync/alphatronic-30004f3f7c5cbd654eff86735e7cd5a16a45.pdf?sfvrsn=ac5a32e6_1

This page is intentionally left blank

2025-07-03 - en

01 Engine Design
02 Engine Layout and Load Diagrams, SFOC, dot 5
03 Turbocharger Selection & Exhaust Gas Bypass
04 Electricity Production
05 Installation Aspects
06 List of Capacities: Pumps, Coolers & Exhaust Gas
07 Fuel
08 Lubricating Oil
09 Cylinder Lubrication
10 Piston Rod Stuffing Box Drain Oil
11 Low-temperature Cooling Water
12 High-temperature Cooling Water
13 Starting and Control Air
14 Scavenge Air
15 Exhaust Gas
16 Engine Control System
17 Vibration Aspects
18 Monitoring Systems and Instrumentation
19 Dispatch Pattern, Testing, Spares and Tools
20 Project Support and Documentation
21 Appendix

This page is intentionally left blank

Calculation of List of Capacities

Updated engine and capacities data is available from the CEAS application at www.everllence.com -->' Marine' --> 'Planning tools and downloads' --> 'CEAS engine calculations'.

This chapter describes the necessary auxiliary machinery capacities to be used for a nominally rated engine. The capacities given are valid for seawater cooling system and central cooling water system, respectively.

For a derated engine, i.e. with a specified MCR different from the nominally rated MCR point, the list of capacities will be different from the nominal capacities.

Furthermore, among others, the exhaust gas data depends on the ambient temperature conditions.

For a derated engine, calculations of:

- Derated capacities
- Available heat rate, for example for freshwater production
- Exhaust gas amounts and temperatures

can be made in the CEAS application available at the above link.

Nomenclature

In the following description and examples of the auxiliary machinery capacities in Section 6.02, the below nomenclatures are used:

Engine ratings	Point / Index	Power	Speed
Nominal maximum continuous rating (NMCR)	L_1	P_{L1}	n_{L1}
Specified maximum continuous rating (SMCR)	M	P_M	n_M
Normal continuous rating (NCR)	S	P_S	n_S

Table. 6.01.01: Nomenclature of basic engine ratings

Parameters	Cooler index	Flow index
M = Mass flow	air = scavenge air cooler	exh = exhaust gas

Table. 6.01.02: Nomenclature of coolers and volume flows, etc.

Engine configurations related to SFOC

The engine type is available in the following version with respect to the efficiency of the turbocharger(s) alone:

High efficiency turbocharger, the basic engine design

Conventional turbocharger, for both of which the lists of capacities Section 6.03 are calculated.

2025-06-17 - en

This page is intentionally left blank

2025-06-17 - en

List of capacities for cooling water systems

The List of Capacities contain data regarding the necessary capacities of the auxiliary machinery for the main engine only, and refer to NMCR. Complying with IMO Tier II NO_x limitations.

The heat dissipation figures include 10% extra margin for overload running except for the scavenge air cooler, which is an integrated part of the diesel engine.

Cooling water systems

The capacities given in the tables are based on tropical ambient reference conditions and refer to engines with high efficiency/conventional turbocharger running at NMCR for:

- Seawater cooling system,
  See diagram, Fig. 6.02.01 and nominal capacities in Fig. 6.03.01

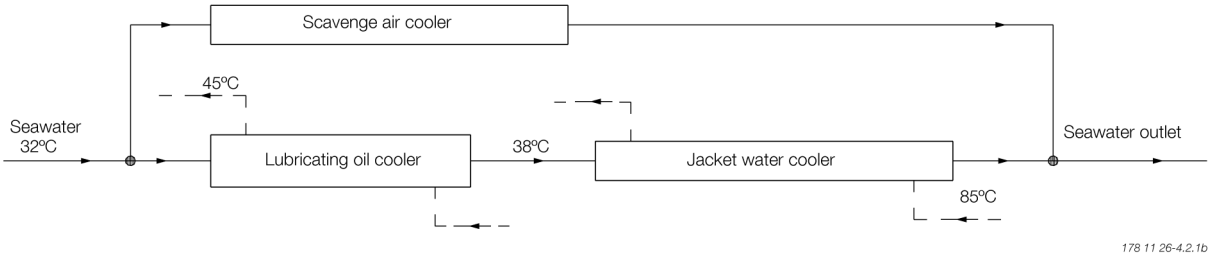

Fig. 6.02.01: Diagram for seawater cooling system

- Central cooling water system,
  See diagram, Fig. 6.02.02 and nominal capacities in Fig. 6.03.01

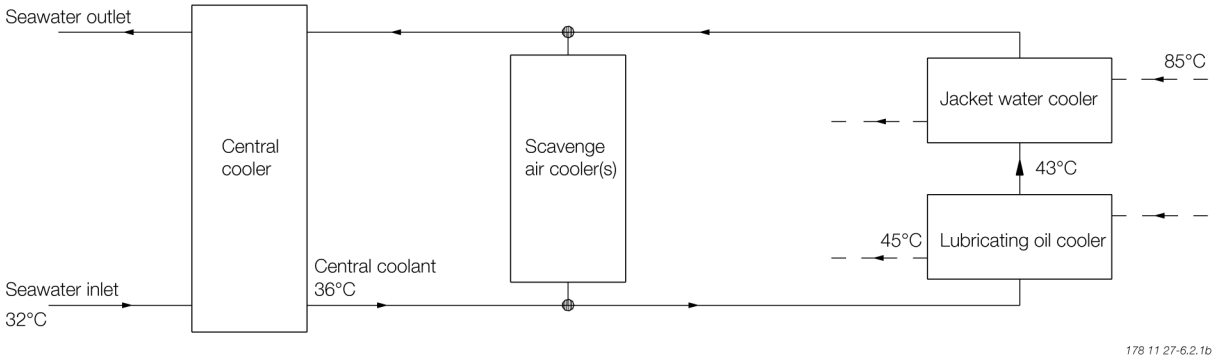

Fig. 6.02.02: Diagram for central cooling water system

The capacities for the starting air receivers and the compressors are stated in Fig. 6.03.01.

Heat radiation

The radiation and convection heat losses to the engine room is around 1% of the engine power at NMCR.

2025-03-24 - en

Flanges on engine, etc.

The location of the flanges on the engine are shown in: ‘Engine pipe connections’, and the flanges are identified by reference letters stated in the list of ‘Counter flanges’; both can be found in Chapter 5.

The diagrams use the ‘Basic symbols for piping’, the symbols for instrumentation are according to ‘ISO 1219-1’ / ‘ISO 1219-2’ and the instrumentation list both found in Appendix A.

2025-03-24 - en

List of capacities

Download an engine report with capacities for pumps, coolers, auxiliary system, etc., for your specific engine type by using our online engine calculation tool CEAS at:

https://www.everllence.com/marine/products/planning-tools-and-downloads/ceas-engine-calculations/

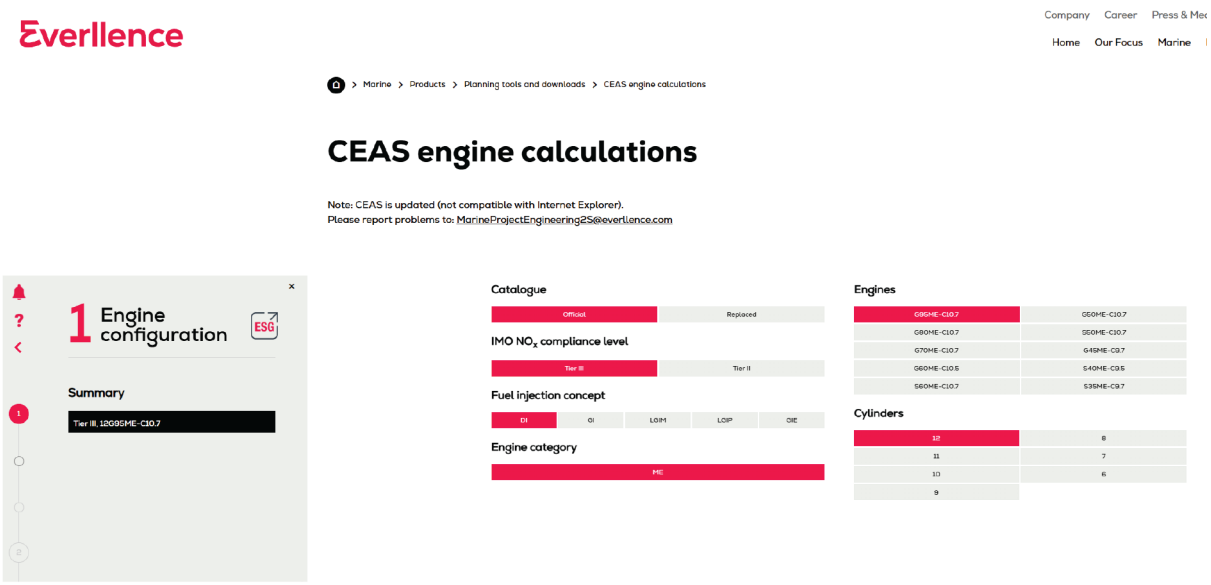

178 70 79-3.1.0

Fig. 6.03.01: The browser-based CEAS calculation system

This page is intentionally left blank

2025-06-17 - en

Auxiliary machinery capacities derated engines

General

Further to the auxiliary machinery capacities for a nominally rated engine shown in Section 6.03, the dimensioning of heat exchangers (coolers) and pumps for derated engines as well as calculating the:

- List of capacities for derated engine
- Available heat to be removed, for example for freshwater production
- Exhaust gas amounts and temperatures

can be made in the CEAS application descibed in Section 20.02.

The CEAS application is available at www.everllence.com --> 'Marine' --> 'Planning tools and downloads' --> 'CEAS Engine Calculations' .

Pump pressure and temperatures

The pump heads stated in the table below are for guidance only and depend on the actual pressure drop across coolers, filters, etc. in the systems.

	Pump head, bar	Maximum working temp. °C
Fuel oil supply pump	4	100
Fuel oil circulating pump	6	150
Lubricating oil pump	4.5	70
Seawater pump, for seawater cooling system	2.5	50
Seawater pump, for central cooling water system	2.0	50
Central cooling water pump	2.5	80
Jacket water pump	3.0	100

Flow velocities

For external pipe connections, we prescribe the following maximum velocities:

Marine diesel oil	1.0 m/s
Heavy fuel oil	0.6 m/s
Lubricating oil	1.8 m/s
Cooling water	3.0 m/s

2025-08-01 - en

Centrifugal pump selection

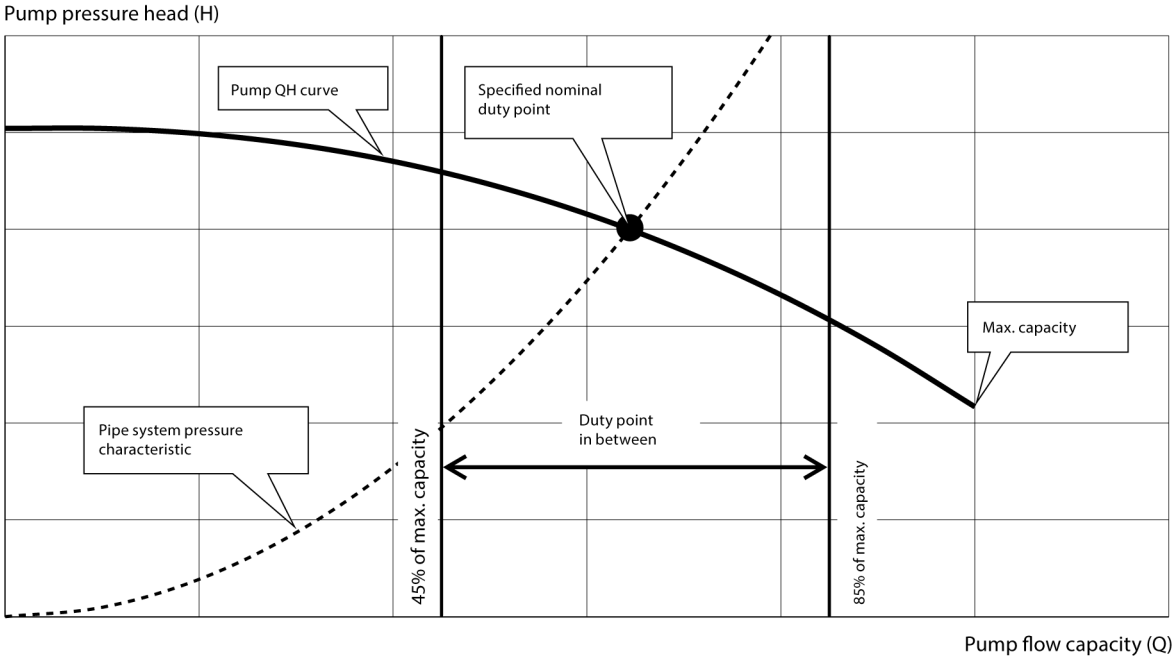

079 08 81-9.0.0a

Fig. 6.04.01: Location of the specified nominal duty point (SNDP) on the pump QH curve

When selecting a centrifugal pump, it is recommended to carefully evaluate the pump QH (capacity/ head) curve in order for the pump to work properly both in normal operation and under changed conditions. But also for ensuring that the maximum pipe design pressure is not exceeded.

The following has to be evaluated:

- Location of the specified nominal duty point (SNDP) on the pump QH curve
- Pump QH curve slope
- Maximum available delivery pressure from the pump.

Location of the Duty Point on the Pump QH

Particularly important is the location of the specified nominal duty point (SNDP) on the pump QH curve: the SNDP is equal to the intersection of the pump QH curve and the pipe system pressure characteristic, which is defined at the design stage.

The SNDP must be located in the range of 45 to 85% of the pump's maximum capacity, see Fig. 6.04.01.

Thus, the pump will be able to operate with slightly lower or higher pipe system pressure characteristic than specified at the design stage, without the risk of cavitation or too big variations in flow.

2025-08-01 - en

Pump QH Curve Slope

At the location of the SNDP, the pump capacity should not decrease by more than 10% when the pressure is increased by 5%, see Fig. 6.04.02.

This way, the flow stays acceptable even if the pipe system pressure is higher than expected and the flow does not change too much, for example when a thermostatic valve changes position.

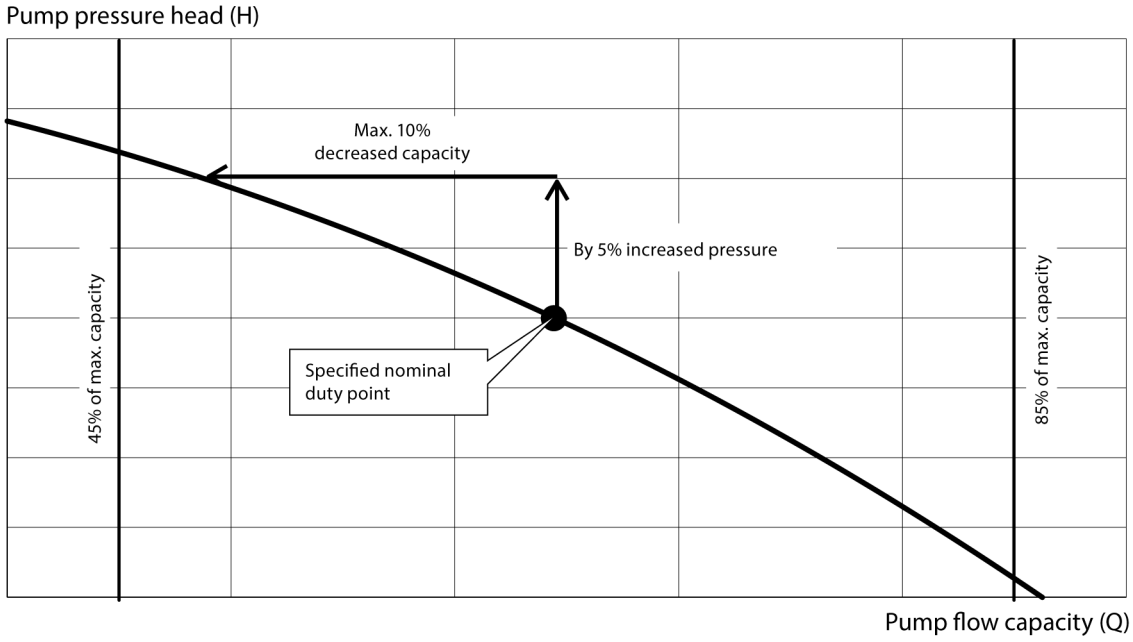

079 08 81-9.0.0b

Fig. 6.04.02: Pump QH curve slope

Maximum Available Pump Delivery Pressure

It is important to evaluate, if the maximum available delivery pressure from the pump contributes to exceeding the maximum allowable design pressure in the pipe system.

The maximum available delivery pressure from the pump will occur e.g. when a valve in the system is closed, see Fig. 6.04.03.

The maximum allowable pipe system design pressure must be known in order to make the pressure rate sizing for equipment and other pipe components correctly.

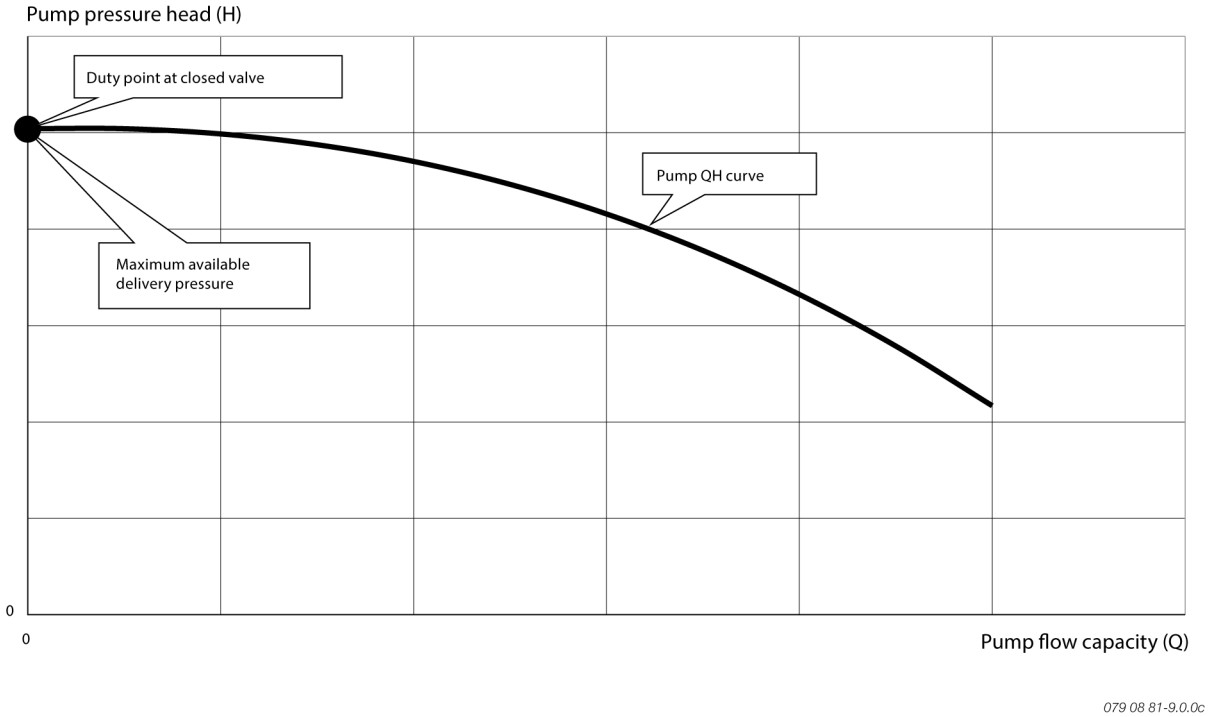

Fig. 6.04.03: Maximum available pump delivery pressure

01 Engine Design
02 Engine Layout and Load Diagrams, SFOC, dot 5
03 Turbocharger Selection & Exhaust Gas Bypass
04 Electricity Production
05 Installation Aspects
06 List of Capacities: Pumps, Coolers & Exhaust Gas
07 Fuel
08 Lubricating Oil
09 Cylinder Lubrication
10 Piston Rod Stuffing Box Drain Oil
11 Low-temperature Cooling Water
12 High-temperature Cooling Water
13 Starting and Control Air
14 Scavenge Air
15 Exhaust Gas
16 Engine Control System
17 Vibration Aspects
18 Monitoring Systems and Instrumentation
19 Dispatch Pattern, Testing, Spares and Tools
20 Project Support and Documentation
21 Appendix

This page is intentionally left blank

Fuel oil system

The system is so arranged that both diesel oil and heavy fuel oil can be used, see Fig. 7.01.01.

From the service tank the fuel is led to an electrically driven supply pump by means of which a pressure of approximately 4 bar can be maintained in the low pressure part of the fuel circulating system, thus avoiding gasification of the fuel in the venting box in the temperature ranges applied.

The venting box is connected to the service tank via an automatic deaerating valve, which will release any gases present, but will retain liquids.

From the low pressure part of the fuel system the fuel oil is led to an electrically-driven circulating pump, which pumps the fuel oil through a heater and a full flow filter situated immediately before the inlet to the engine.

The fuel injection is performed by the electronically controlled pressure booster located on the Hydraulic Cylinder Unit (HCU), one per cylinder, which also contains the actuator for the electronic exhaust valve activation.

The Cylinder Control Units (CCU) of the Engine Control System (described in Section 16.01) calculate the timing of the fuel injection and the exhaust valve activation.

To ensure ample filling of the HCU, the capacity of the electrically-driven circulating pump is higher than the amount of fuel consumed by the diesel engine. Surplus fuel oil is recirculated from the engine through the venting box.

To ensure a constant fuel pressure to the fuel injection pumps during all engine loads, a spring loaded overflow valve is inserted in the fuel oil system on the engine.

The fuel oil pressure measured on the engine (at fuel pump level) should be 7-8 bar, equivalent to a circulating pump pressure of 10 bar.

Fuel considerations

When the engine is stopped, the circulating pump will continue to circulate heated heavy fuel through the fuel oil system on the engine, thereby keeping the fuel pumps heated and the fuel valves deaerated. This automatic circulation of preheated fuel during engine standstill is the background for our recommendation: *constant operation on heavy fuel*.

In addition, if this recommendation was not followed, there would be a latent risk of diesel oil and heavy fuels of marginal quality forming incompatible blends during fuel change over or when operating in areas with restrictions on sulphur content in fuel oil due to exhaust gas emission control.

In special circumstances a change-over to diesel oil may become necessary – and this can be performed at any time, even when the engine is not running. Such a change-over may become necessary if, for instance, the vessel is expected to be inactive for a prolonged period with cold engine e.g. due to:

- docking
- stop for more than five days
- major repairs of the fuel system, etc.

2025-06-17 - en

The built-on overflow valves, if any, at the supply pumps are to be adjusted to 5 bar, whereas the external bypass valve is adjusted to 4 bar. The pipes between the tanks and the supply pumps shall have minimum 50% larger passage area than the pipe between the supply pump and the circulating pump.

If the fuel oil pipe ‘X’ at inlet to engine is made as a straight line immediately at the end of the engine, it will be necessary to mount an expansion joint. If the connection is made as indicated, with a bend immediately at the end of the engine, no expansion joint is required.

2025-06-17 - en

Fuel oil system

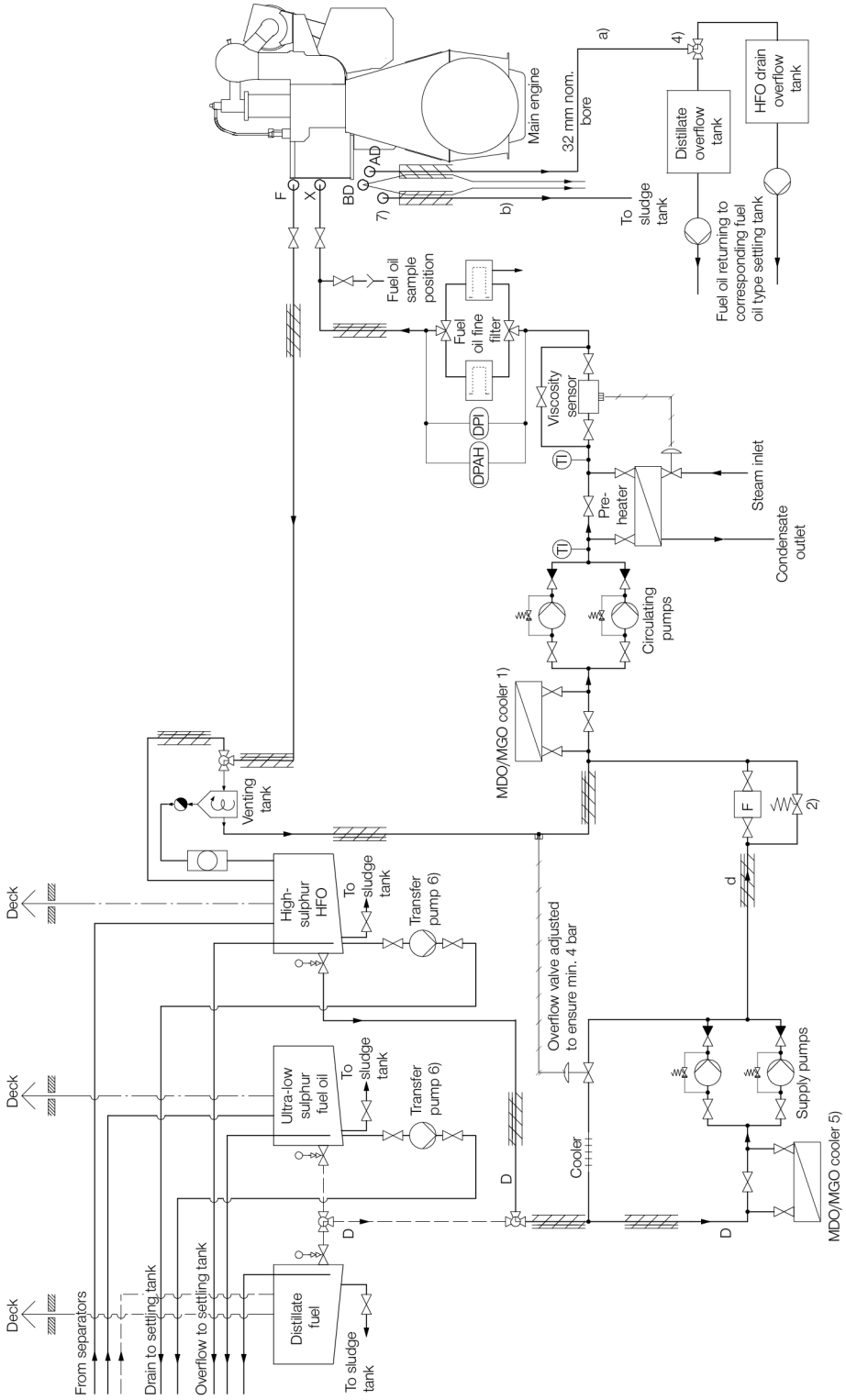

079 95 01-2.3.1

2025-06-17 - en

7.01 Fuel oil system

1) MDO/MGO Cooler

For low-viscosity distillate fuels like marine gas oil (MGO), it is necessary to have a cooler to ensure that the viscosity at engine inlet is above 2 cSt.

Location of cooler: As shown or, alternatively, anywhere before inlet to engine.

2) Fuel oil flowmeter (Optional)

Flow rate: See 'List of Capacities' (same as fuel supply pump).
Type: In case a damaged flow meter can block the fuel supply, a safety bypass valve is to be placed across the flowmeter.

3) 0.23 litre/kWh in relation to certified Flow Rate (CFR); the engine SMCR can be used to determine the capacity. The separators should be capable of removing cat fines (Al+Si) from 80 ppm to a maximum level of 15 ppm Al+Si but preferably lower.
Inlet temperature: Min. 98°C.

4) Valve in engine drain pipe

Valve in engine drain pipe is not acceptable. If the drain is blocked, the pressure booster top cover seal will be damaged.
In case a valve between the engine connection AD and the drain tank is required, the valve should be locked in open position and marked with a text, indicating that the valve must only be closed in case of no fuel oil pressure to the engine. In case of non-return valve, the opening pressure for the valve has to be below 0.2 bar.

5) MDO/MGO Cooler (Optional)

For protection of supply pumps against too warm oil and thus too low viscosity.

6) Transfer pump (Optional)

The transfer pump has to be able to return part of the content of the service tank to the settling tank to minimize the risk of supplying fuel to the engine with a high content of settled particles, e.g. cat fines, if the service tank has not been used for a while.

7) Name of flange connection

AF for engines with a bore of 60 cm and above
AE for engines with a bore of 50 cm and below

a) Tracing, fuel oil lines: By jacket cooling water

b) Tracing, drain lines: By jacket cooling water
– only for engines with bore of 60 cm and above

*) Optional installation

The letters refer to the list of 'Counterflanges'

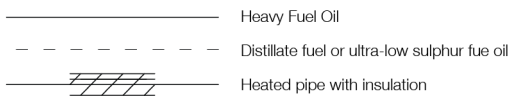

079 95 01-2.3.1

Fig. 7.01.01: Fuel oil system

2025-06-17 - en

Heavy fuel oil tank

This type of tank should be used for any residual fuel usage. (It can also be used for distillate fuel). The tank must be designed as high as possible and equipped with a sloping bottom in order to collect the solid particles settling from the fuel oil.

The tank outlet to the supply pumps must be placed above the slope to prevent solid particles to be drawn into the heavy fuel oil supply pumps. An overflow pipe must be installed inside the tank below the pump outlet pipe to ensure that only 'contaminated' fuel is pumped back to settling tank.

A possibility of returning the day tank content to the settling tank must be installed for cases where the day tank content have not been used for some time.

Drain of clean fuel oil from HCU, pumps, pipes

The HCU fuel oil pressure booster has a leakage drain of clean fuel oil from the umbrella sealing through 'AD' to the fuel oil drain tank.

The drain amount in litres per cylinder per hour is approximately as listed in Table 7.01.02.

This drained clean oil will, of course, influence the measured SFOC, but the oil is not wasted, and the quantity is well within the measuring accuracy of the flowmeters normally used.

Engine bore, ME/ME-C, ME-B (incl. -GI & -LGI versions)	Flow rate, litres/cyl./hr.
98	On request
95, 90	1.7
80	2.1
70, 65	1.5
60	1.2

Table 7.01.02: Drain amount from fuel oil pump umbrella seal, figures for guidance

Leakage oil amount dependencies

Due to tolerances in the fuel pumps, the table figures may vary and are therefore for guidance only. In fact, the leakage amount relates to the clearance between plunger and barrel in the third power. Thus, within the drawing tolerances alone, the table figures can vary quite a lot.

The engine load, however, has little influence on the drain amount because the leakage does not originate from the high-pressure side of the fuel pump. For the same reason, the varying leakage amount does not influence the injection itself.

The figures in Table 7.01.02 are based on fuel oil with 12 cSt viscosity. In case of distillate fuel oil, the figures can be up to 6 times higher due to the lower viscosity.

2025-06-17 - en

Fuel oil drains in service and for overhaul

The main purpose of the drain 'AD' is to collect fuel oil from the fuel pumps.

The drain oil is led to an overflow tank and can be pumped to the heavy fuel oil (HFO) tank or to the settling tank. In case of ultra low sulphur (ULSFO) or distillate fuel oil, the piping should allow the fuel oil to be pumped to the ultra low sulphur or distillate fuel oil tank.

As a safety measure for the crew during maintenance, an overhaul drain from the umbrella leads clean fuel oil from the umbrella directly to drain 'AF' and further to the sludge tank. Also washing water from the cylinder cover and the baseplate is led to drain 'AF'.

The 'AF' drain is provided with a box for giving alarm in case of leakage in a high pressure pipe.

The size of the sludge tank is determined on the basis of the draining intervals, the classification society rules, and on whether it may be vented directly to the engine room.

Drains 'AD', 'AF' and the drain for overhaul are shown in Fig. 7.03.01.

Drain of contaminated fuel etc.

Leakage oil, in shape of fuel and lubricating oil contaminated with water, dirt etc. and collected by the HCU Base Plate top plate (ME only), as well as turbocharger cleaning water etc. is drained off through the bedplate drains 'AE'.

Drain 'AE' is shown in Fig. 8.07.02.

Heating of fuel drain pipes

Owing to the relatively high viscosity of the heavy fuel oil, it is recommended that the drain pipes and the fuel oil drain tank are heated to min. 50°C, but max. 100°C.

The drain pipes between engine and tanks can be heated by the jacket water, as shown in Fig. 7.01.01 'Fuel oil system' as flange 'BD'. (Flange BD and the tracing line are not applicable on MC/ MC-C engines type 42 and smaller).

Fuel oil flow velocity and viscosity

For external pipe connections, we prescribe the following maximum flow velcities:

Marine diesel oil ..... 1.0 m/s
Heavy fuel oil ..... 0.6 m/s

The fuel viscosity is influenced by factors such as emulsification of water into the fuel for reducing the NO_x emission.

Cat fines

Cat fines is a by-product from the catalytic cracking used in fuel distillation. Cat fines is an extremely hard material, very abrasive and damaging to the engine and fuel equipment. It is recommended always to purchase fuel with as low cat fines content as possible.

2025-06-17 - en

Cat fines can to some extent be removed from the fuel by means of a good and flexible tank design and by having optimum conditions for the separator in terms of flow and high temperature.

Further information about fuel oil specifications and other fuel considerations is available in our publications:

Guidelines for fuels and lubes purchasing

0.50% S fuel operation - 2020

The publications are available at www.everllence.com → 'Marine' → 'Products' → 'Planning Tools and Downloads' → 'Technical Papers'.

2025-06-17 - en

This page is intentionally left blank

2025-06-17 - en

Fuel oils

Marine diesel oil

Marine diesel oil ISO 8217, Class DMB
British Standard 6843, Class DMB
Similar oils may also be used

Heavy fuel oil (HFO)

Most commercially available HFO with a viscosity below 700 cSt at 50°C (7,000 sec. Redwood I at 100°F) can be used.

For guidance on purchase, reference is made to ISO 8217:2012, British Standard 6843 and to CIMAC recommendations regarding requirements for heavy fuel for diesel engines, fourth edition 2003, in which the maximum acceptable grades are RMH 700 and RMK 700. The above“mentioned ISO and BS standards supersede BSMA 100 in which the limit was M9.

The data in the above HFO standards and specifications refer to fuel as delivered to the ship, i.e. before on-board cleaning.

In order to ensure effective and sufficient cleaning of the HFO, i.e. removal of water and solid contaminants, the fuel oil specific gravity at 15°C (60°F) should be below 0.991, unless modern types of centrifuges with adequate cleaning abilities are used.

Higher densities can be allowed if special treatment systems are installed.

Current analysis information is not sufficient for estimating the combustion properties of the oil. This means that service results depend on oil properties which cannot be known beforehand. This especially applies to the tendency of the oil to form deposits in combustion chambers, gas passages and turbines. It may, therefore, be necessary to rule out some oils that cause difficulties.

Guiding heavy fuel oil specification

Based on our general service experience we have, as a supplement to the above mentioned standards, drawn up the guiding HFO specification shown below.

Heavy fuel oils limited by this specification have, to the extent of the commercial availability, been used with satisfactory results on Everllence B&W two-stroke low speed diesel engines.

The data refers to the fuel as supplied i.e. before any on-board cleaning.

Guiding specification (maximum values)		
Density at 15°C	kg/m^3	≤ 1.010*
Kinematic viscosity at 100°C at 50°C	 cSt cSt	 ≤ 55 ≤ 700
Flash point	°C	≥ 60
Pour point	°C	≤ 30

2025-06-17 - en

Carbon residue	% (m/m)	≤ 20
Ash	% (m/m)	≤ 0.15
Total sediment potential	% (m/m)	≤ 0.10
Water	% (v/v)	≤ 0.5
Sulphur	% (m/m)	≤ 4.5
Vanadium	mg/kg	≤ 450
Aluminum + Silicon	mg/kg	≤ 60
Equal to ISO 8217:2010 - RMK 700 / CIMAC recommendation No. 21 - K700		
* Provided automatic clarifiers are installed m/m = mass v/v = volume		

If heavy fuel oils with analysis data exceeding the above figures are to be used, especially with regard to viscosity and specific gravity, the engine builder should be contacted for advice regarding possible fuel oil system changes.

2025-06-17 - en

Fuel oil pipes and drain pipes

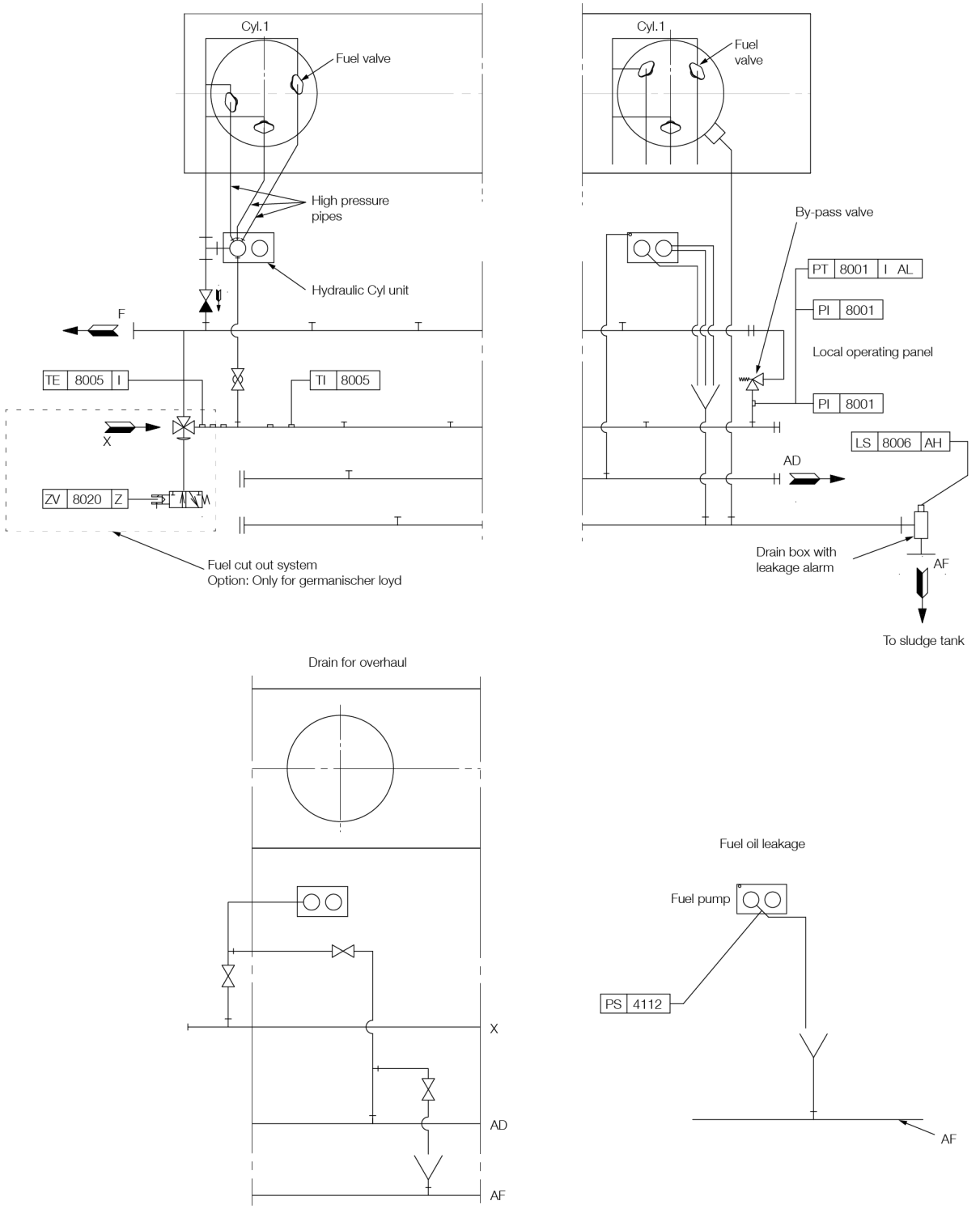

The letters refer to list of ‘Counterflanges’

The item nos. refer to ‘Guidance values automation’

Fig. 7.03.01: Fuel oil and drain pipes

2025-03-24 - en

This page is intentionally left blank

Insulation and heat tracing of fuel oil piping

Insulation of fuel oil pipes and fuel oil drain pipes should not be carried out until the piping systems have been subjected to the pressure tests specified and approved by the respective classification society and/or authorities, Fig. 7.04.01.

The directions mentioned below include insulation of hot pipes, flanges and valves with a surface temperature of the complete insulation of maximum 55°C at a room temperature of maximum 38°C. As for the choice of material and, if required, approval for the specific purpose, reference is made to the respective classification society.

Fuel oil pipes

The pipes are to be insulated with 20 mm mineral wool of minimum 150 kg/m^3 and covered with glass cloth of minimum 400 g/m^2.

Fuel oil pipes and heating pipes together

Two or more pipes can be insulated with 30 mm wired mats of mineral wool of minimum 150 kg/m^3 covered with glass cloth of minimum 400 g/m^2.

Flanges and valves

The flanges and valves are to be insulated by means of removable pads. Flange and valve pads are made of glass cloth, minimum 400 g/m^2, containing mineral wool stuffed to minimum 150 kg/m^3.

Thickness of the pads to be:

Fuel oil pipes .....20 mm
Fuel oil pipes and heating pipes together ....30 mm

The pads are to be fitted so that they lap over the pipe insulating material by the pad thickness. At flanged joints, insulating material on pipes should not be fitted closer than corresponding to the minimum bolt length.

Mounting

Mounting of the insulation is to be carried out in accordance with the supplier's instructions.

2025-03-11 - en

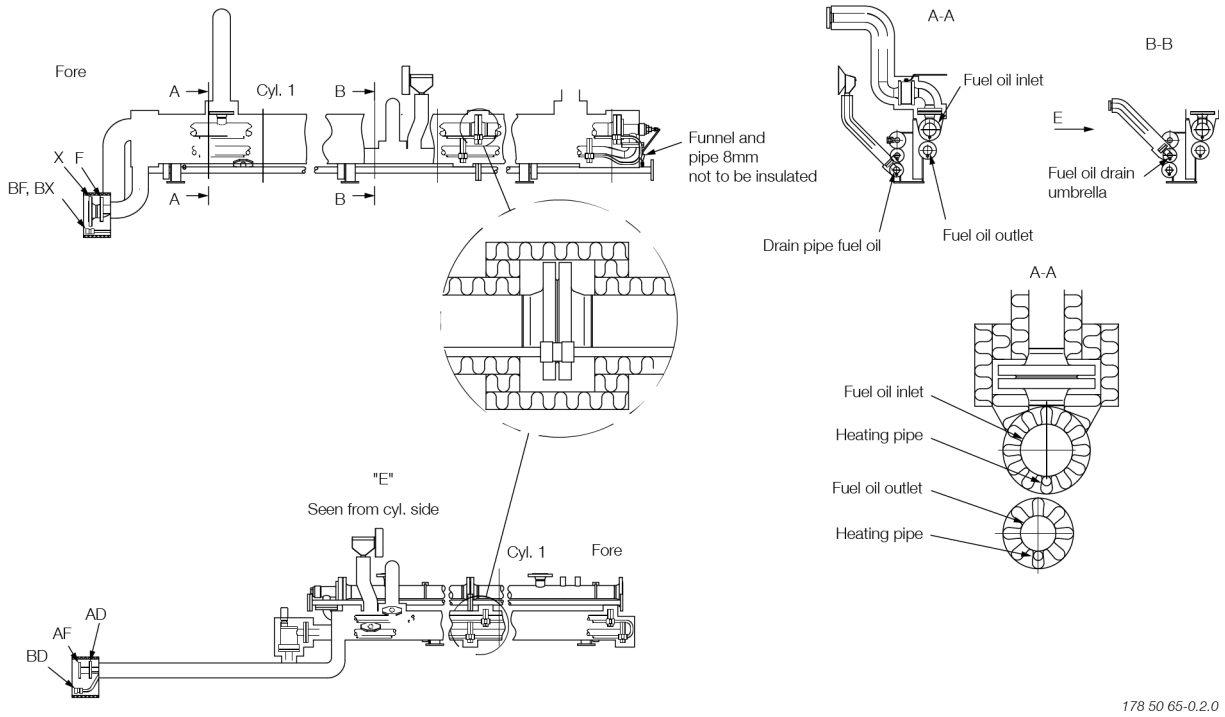

Fig. 7.04.01: Details of fuel oil pipes insulation

Heat loss in piping

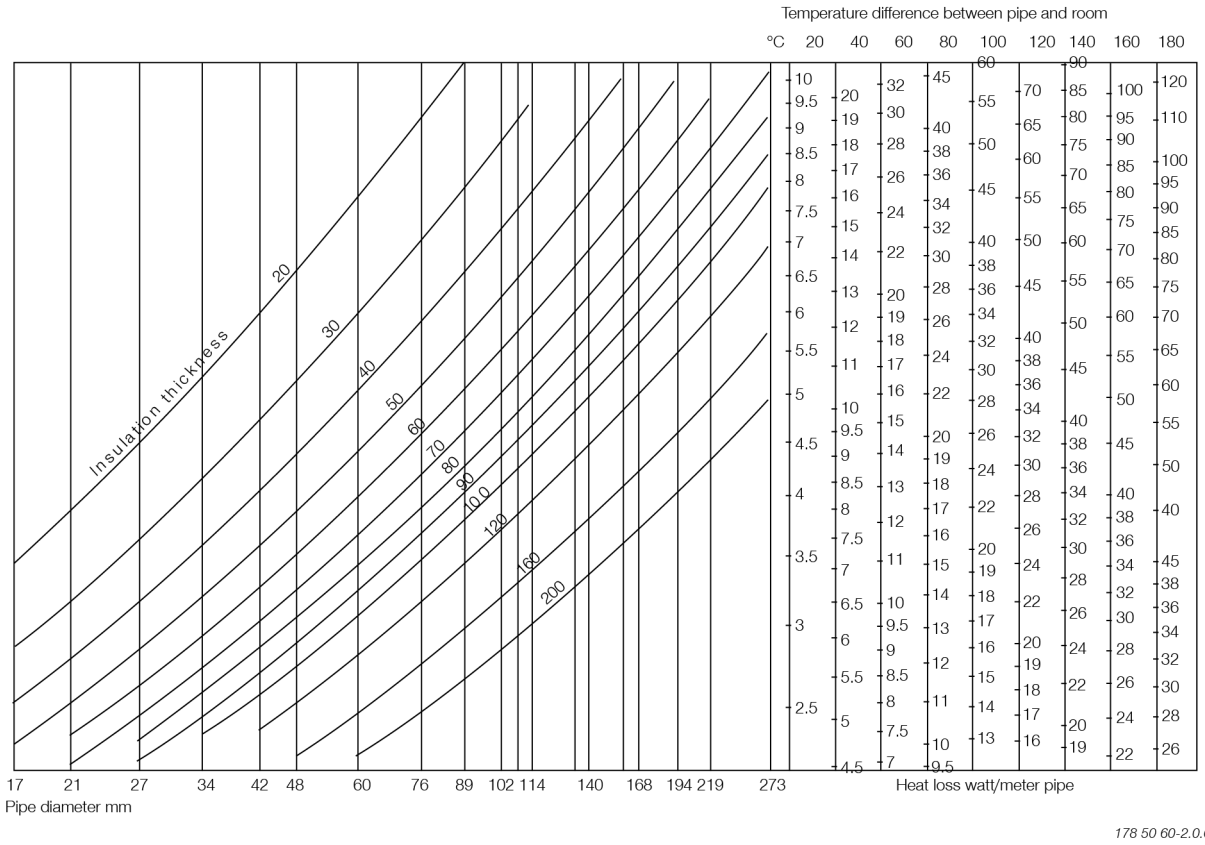

Fig. 7.04.02: Heat loss/Pipe cover

Fuel oil pipe heat tracing

The steam tracing of the fuel oil pipes is intended to operate in two situations:

1. When the circulation pump is running, there will be a temperature loss in the piping, see Fig. 7.04.02. This loss is very small, therefore tracing in this situation is only necessary with very long fuel supply lines.
2. When the circulation pump is stopped with heavy fuel oil in the piping and the pipes have cooled down to engine room temperature, as it is not possible to pump the heavy fuel oil. In this situation the fuel oil must be heated to pumping temperature of about 50˚C.

   To heat the pipe to pumping level we recommend to use 100 watt leaking/meter pipe.

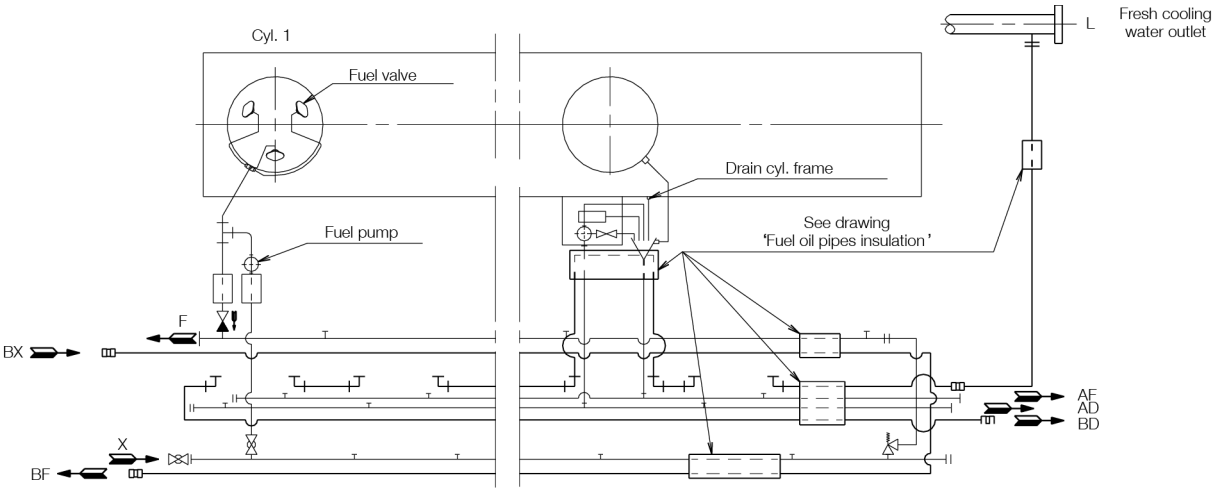

The letters refer to list of 'Counterflanges'

178 50 62-5.0.1

Fig. 7.04.03: Fuel oil pipe heat tracing

Fuel oil and lubricating oil pipe spray shields

To fulfill IMO regulations, fuel and oil pipe assemblies are to be secured by spray shields.

The shields can be made either by a metal flange cover according to IMO MSC/Circ.647 or antisplashing tape wrapped according to makers instruction for Class approval, see examples shown in Fig. 7.04.04a and b.

To ensure tightness, the spray shields are to be applied after pressure test of the pipe system.

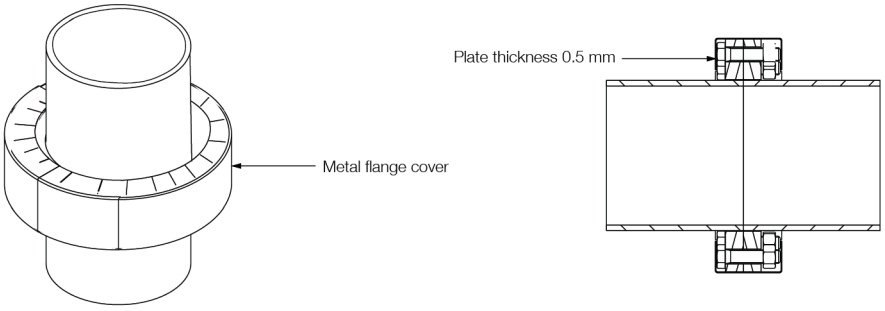

176 94 23-4.4.2

2025-03-11 - en

Fig. 7.04.04a: Metal flange cover and clamping band

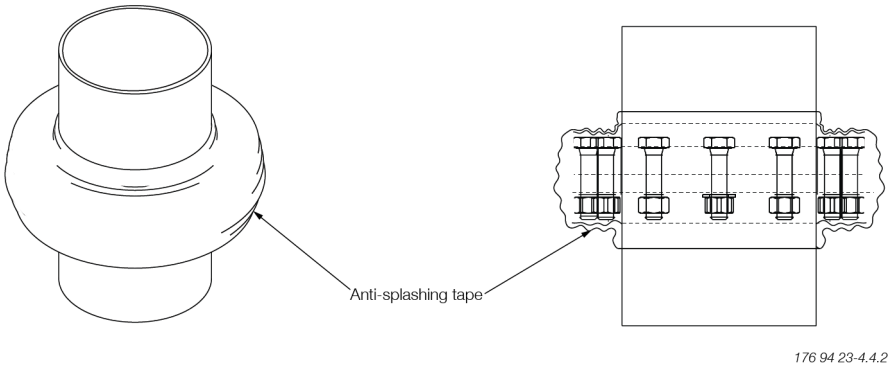

Fig. 7.04.04b: Anti-splashing tape (FN tape)

2025-03-11 - en

Components for Fuel Oil System

Fuel oil separator

The manual cleaning type of separators are not to be recommended. Separators must be self-cleaning, either with total discharge or with partiadischarge.

Distinction must be made between installations for:

- Specific gravities < 0.991 (corresponding to ISO 8217: RMA-RMD grades and British Standard 6843 from RMA to RMH, and CIMAC from A to H-grades)
- Specific gravities > 0.991 (corresponding to ISO 8217: RME-RMK grades and CIMAC K-grades).

For the latter specific gravities, the manufacturers have developed special types of separators, e.g.:

Alfa Laval .....Alcap
Westfalia .....Unitrol
Mitsubishi .....E-Hidens II

Everllence also recommends using high-temperature separators, which will increase the efficiency.

The separator should be able to treat approximately the following quantity of oil:

0.23 litres/kWh in relation to CFR (certified flow rate)

This figure includes a margin for:

- water content in fuel oil
- possible sludge, ash and other impurities in the fuel oil
- increased fuel oil consumption, in connection with other conditions than ISO standard condition
- purifier service for cleaning and maintenance.

The Specified MCR can be used to determine the capacity. The separator capacity must always be higher than the calculated capacity.

Inlet temperature to separator, minimum .....98°C

CFR according to CEN, CWA 15375

The size of the separator has to be chosen according to the supplier's table valid for the selected viscosity of the Heavy Fuel Oil and in compliance with CFR or similar. Normally, two separators are installed for Heavy Fuel Oil (HFO), each with adequate capacity to comply with the above recommendation.

A separator for Marine Diesel Oil (MDO) is not a must. However, Everllence recommends that at least one of the HFO separators can also treat MDO.

If it is decided after all to install an individual purifier for MDO on board, the capacity should be based on the above recommendation, or it should be a separator of the same size as that for HFO.

It is recommended to follow the CIMAC Recommendation 25:

Recommendations concerning the design of heavy fuel treatment plants for diesel engines.

2025-06-17 - en

Fuel oil supply pump

Fuel oil viscosity, specified ....up to 700 cSt at 50°C
Fuel oil viscosity, maximum ..... 700 cSt
Fuel oil viscosity, minimum ..... 2 cSt
Pump head ..... 4 bar
Fuel oil flow ..... see 'List of Capacities'
Delivery pressure ..... 4 bar
Working temperature, maximum ..... 110°C *)

*) If a high temperature separator is used, higher working temperature related to the separator must be specified.

The capacity stated in 'List of Capacities' is to be fulfilled with a tolerance of: –0% to +15% and shall also be able to cover the back-flushing, see 'Fuel oil filter'.

Fuel oil circulating pump

This is to be of the screw or gear wheel type.

Fuel oil viscosity, specified ....up to 700 cSt at 50°C
Fuel oil viscosity normal ..... 20 cSt
Fuel oil viscosity, maximum ..... 700 cSt
Fuel oil viscosity, minimum ..... 2 cSt
Fuel oil flow ..... see 'List of Capacities'
Pump head ..... 6 bar
Delivery pressure .....10 bar
Working temperature ..... 150°C

The capacity stated in 'List of Capacities' is to be fulfilled with a tolerance of: –0% to +15% and shall also be able to cover the back-flushing, see 'Fuel oil filter'.

Pump head is based on a total pressure drop in filter and preheater of maximum 1.5 bar.

2025-06-17 - en

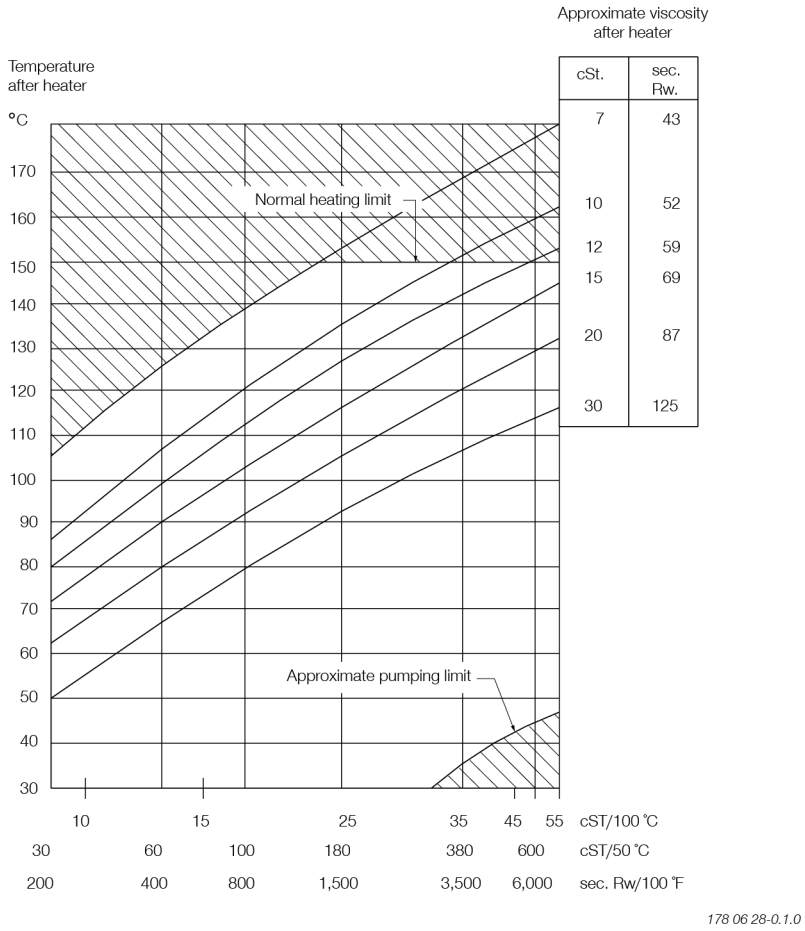

Fuel oil heater

The heater is to be of the tube or plate heat exchanger type.

The required heating temperature for different oil viscosities will appear from the 'Fuel oil heating chart', Fig. 7.05.01. The chart is based on information from oil suppliers regarding typical marine fuels with viscosity index 70-80.

Fig. 7.05.01: Fuel oil heating chart

Since the viscosity after the heater is the controlled parameter, the heating temperature may vary, depending on the viscosity and viscosity index of the fuel.

Recommended viscosity meter setting is 10-15 cSt.

Fuel oil viscosity specified ... up to 20 cSt at 150°C fuel oil circulating pump

Heat dissipation ..... see 'List of Capacities' Pressure drop on fuel oil side, maximum ..... 1 bar at 15 cSt

Working pressure .....10 bar

Fuel oil outlet temperature .....150°C

Steam supply, saturated .....7 bar abs

To maintain a correct and constant viscosity of the fuel oil at the inlet to the main engine, the steam supply shall be automatically controlled, usually based on a pneumatic or an electrically controlled system.

2025-06-17 - en

Fuel oil filter

The filter can be of the manually cleaned duplex type or an automatic filter with a manually cleaned bypass filter.

If a **double filter (duplex)** is installed, it should have sufficient capacity to allow the specified full amount of oil to flow through each side of the filter at a given working temperature with a max. 0.3 bar pressure drop across the filter (clean filter).

If a **filter with backflushing** arrangement is installed, the following should be noted. The required oil flow specified in the 'List of capacities', i.e. the delivery rate of the fuel oil supply pump and the fuel oil circulating pump, should be increased by the amount of oil used for the backflushing, so that the fuel oil pressure at the inlet to the main engine can be maintained during cleaning.

In those cases where an **automatically cleaned filter** is installed, it should be noted that in order to activate the cleaning process, certain makers of filters require a greater oil pressure at the inlet to the filter than the pump pressure specified. Therefore, the pump capacity should be adequate for this purpose, too.

Alternatively positioned in the supply circuit after the supply pumps, the filter has the same flow rate as the fuel oil supply pump. In this case, a duplex safety filter has to be placed in the circulation circuit before the engine. The absolute fineness of the safety filter is recommended to be maximum 60 µm and the flow rate the same as for the circulation oil pump.

The fuel oil filter should be based on heavy fuel oil of: 130 cSt at 80°C = 700 cSt at 50°C = 7,000 sec Redwood I/100°F.

Fuel oil flow .....see 'Capacity of fuel oil circulating pump'
Working pressure .....10 bar
Test pressure ..... according to Class rule
Absolute fineness, maximum .....10 µm
Working temperature, maximum .....150°C
Oil viscosity at working temperature, Oil viscosity at working temperature, maximum .....20 cSt
Pressure drop at clean filter,
maximum .....0.3 bar
Filter to be cleaned at a pressure
drop of .....0.5 bar

Note:
Some filter makers refer the fineness of the filters to be 'nominal fineness'. Thus figures will be approximately 40% lower than the 'absolute fineness' (6 µm nominal).

The filter housing shall be fitted with a steam jacket for heat tracing.

Further information about cleaning heavy fuel oil and other fuel oil types is available in Everllence' most current Service Letters on this subject.

The Service Letters are available at www.everllence.com --> 'Service Letters'.

Fuel oil filter (option)

Located as shown in drawing or alternatively in the supply circuit after the supply pumps. In this case, a duplex safety filter has to be placed in the circulation circuit before the engine, with an absolute fineness of maximum 60 µm.

2025-06-17 - en

Pipe diameter ‘D’ & ‘d’

The pipe (D) between the service tank and the supply pump is to have minimum 50% larger passage area than the pipe (d) between the supply pump and in the circulating pump. This ensures the best suction conditions for the supply pump (small pressure drop in the suction pipe).

Overflow valve

See ‘List of Capacities’ (fuel oil supply oil pump).

Flushing of the fuel oil system

Before starting the engine for the first time, the system on board has to be flushed in accordance with Everllence recommendations:

Flushing of Fuel Oil System

which is available from Everllence, Copenhagen.

Fuel oil venting box

The design of the fuel oil venting box is shown in Fig. 7.05.02. The size is chosen according to the maximum flow of the fuel oil circulation pump, which is listed in section 6.03.

The venting tank has to be placed at the top service tank. If the venting tank is placed below the top of the service tank, the drain pipe from the automatic venting valve has to be led to a tank placed lower than the venting valve. The lower tank can be a ‘Fuel oil over flow tank’, if this tank has venting to deck.

2025-06-17 - en

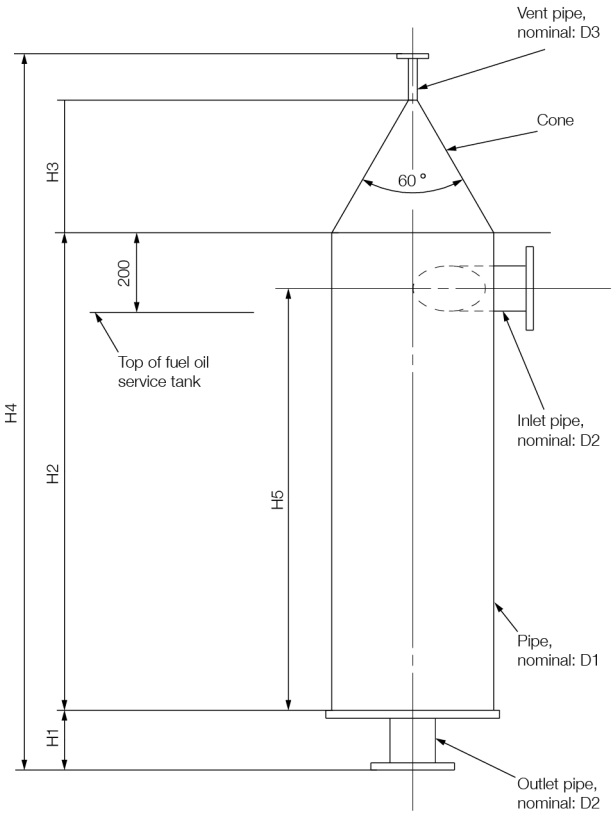

078 52 30-1.1.0

Flow m^3/h Q (max.)*	Dimensions in mm							
	D1	D2	D3	H1	H2	H3	H4	H5
1.3	150	32	15	100	600	171.3	1,000	550
2.1	150	40	15	100	600	171.3	1,000	550
5.0	200	65	15	100	600	171.3	1,000	550
8.4	400	80	15	150	1,200	333.5	1,800	1,100
11.5	400	90	15	150	1,200	333.5	1,800	1,100
19.5	400	125	15	150	1,200	333.5	1,800	1,100
29.4	500	150	15	150	1,500	402.4	2,150	1,350
43.0	500	200	15	150	1,500	402.4	2,150	1,350

* The maximum flow of the fuel oil circulation pump

Fig. 07.05.02: Fuel oil venting box

2025-06-17 - en

Cooling of distillate fuels

The external fuel systems (supply and circulating systems) have a varying effect on the heating of the fuel and, thereby, the viscosity of the fuel when it reaches the engine inlet.

Today, external fuel systems on-board are often designed to have an optimum operation on HFO, which means that the temperature is kept high.

For low-viscosity distillate fuels like marine diesel oil (MDO) and marine gas oil (MGO), however, the temperature must be kept as low as possible in order to ensure a suitable viscosity at engine inlet.

Fuel oil viscosity at engine inlet

The recommended fuel viscosity range for Everllence B&W two-stroke engines at engine inlet is listed in Table 7.05.03.

The lower fuel viscosity limit is 2 cSt

However, 3 cSt or higher is preferable as this will minimise the risk of having problems caused by wear for instance.

For low-viscosity fuel grades, care must be taken not to heat the fuel too much and thereby reduce the viscosity.

Range	Fuel viscosity at engine inlet, cSt
Minimum	2
Normal, distillate	3 or higher
Normal, HFO	10-15
Maximum	20

Table 7.05.03: Recommended fuel viscosity at engine inlet

Information about temperature – viscosity relationship of marine fuels is available in our publication:

Guidelines for Operation on Fuels with less than 0.1% Sulphur, SL2014-593

The publication is available at www.everllence.com -->'Service Letters'.

Impact of fuel viscosity on engine operation

Many factors influence the actually required minimum viscosity tolerance during start-up and lowload operation:

- engine condition and maintenance
- fuel pump wear
- engine adjustment (mainly starting index)
- actual fuel temperature in the fuel system

Although achievable, it is difficult to optimize all of these factors at the same time. This situation complicates operation on fuels in the lowest end of the viscosity range.

Fuel oil cooler

To build in some margin for safe and reliable operation and to maintain the required viscosity at engine inlet, installation of a cooler will be necessary as shown in Fig. 7.01.01.

2025-06-17 - en

Viscosity requirements of fuel pumps etc.

The fuel viscosity does not only affect the engine. In fact, most pumps in the external system (supply pumps, circulating pumps, transfer pumps and feed pumps for the separator) also need viscosities above 2 cSt to function properly.

Everllence recommends contacting the actual pump maker for advice.

2025-06-17 - en

01 Engine Design
02 Engine Layout and Load Diagrams, SFOC, dot 5
03 Turbocharger Selection & Exhaust Gas Bypass
04 Electricity Production
05 Installation Aspects
06 List of Capacities: Pumps, Coolers & Exhaust Gas
07 Fuel
08 Lubricating Oil
09 Cylinder Lubrication
10 Piston Rod Stuffing Box Drain Oil
11 Low-temperature Cooling Water
12 High-temperature Cooling Water
13 Starting and Control Air
14 Scavenge Air
15 Exhaust Gas
16 Engine Control System
17 Vibration Aspects
18 Monitoring Systems and Instrumentation
19 Dispatch Pattern, Testing, Spares and Tools
20 Project Support and Documentation
21 Appendix

This page is intentionally left blank

Lubricating and cooling oil system

System oil is the common designation of a lubricating oil used for different purposes in systems in and on the engine. The system oil is used as:

1. Circulating oil
   - Lubrication of crosshead bearings, crankshaft bearings, main and thrust bearings
   - Cooling of pistons
   - Turbochargers
   - Axial vibration damper

2. Hydraulic oil
   - Hydraulic power supply unit (HPS)
   - Exhaust valves
   - Hydraulic cylinder unit (HCU)
   - Moment compensator (if installed)
   - Torsional vibration damper (if installed)

3. Control oil
   - Activates (control) valves, etc.

4. Sealing oil in dual-fuel engines
   - Confines low-flashpoint (LF) fuel in LF-systems (various systems and types).

Two different lubricating and cooling oil system arrangements are available, depending on whether the lubricating oil pump is a submerged centrifugal deep-well pump (Fig. 8.01.01), or a positive displacement pump (Fig. 8.01.02).

2025-06-17 - en

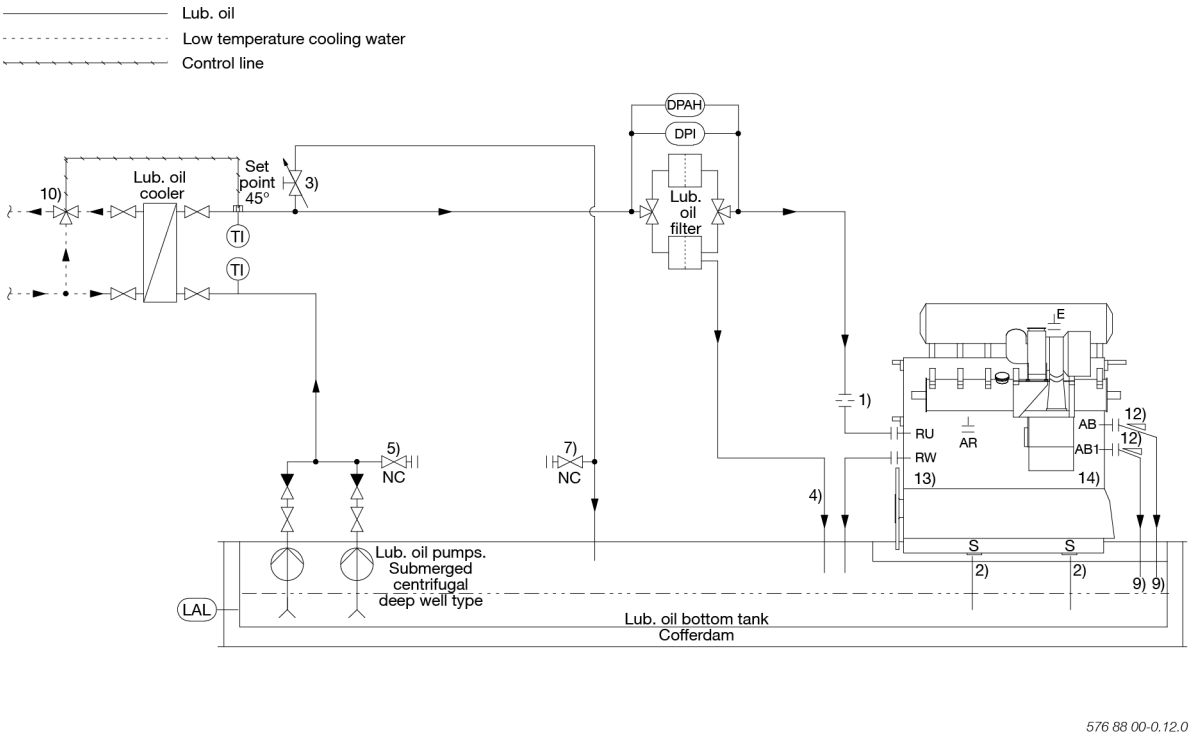

Fig. 8.01.01: Lubricating and cooling oil system arrangement with a submerged centrifugal deep-well lubricating oil pump and cofferdam below the lubricating oil bottom tank

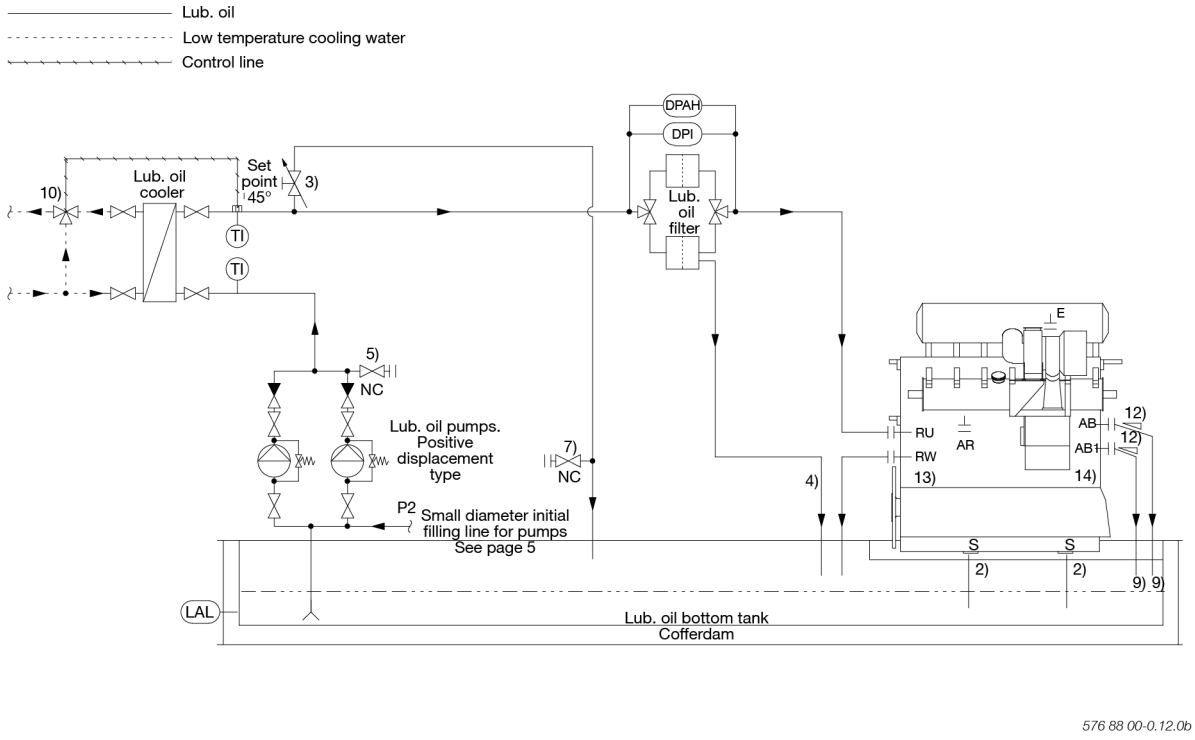

Fig. 8.01.02: Lubricating and cooling oil system arrangement with a positive displacement lubricating oil pump and cofferdam below the lubricating oil bottom tank

The main lubricating oil pump pumps lubricating oil from a bottom tank to the lubricating oil cooler, through a full-flow filter, to engine inlet 'RU', see Figs. 8.01.01–8.01.02. From the engine, the oil collects in the oil pan from where it is drained off to the lubricating oil bottom tank through engine outlet ´S`. For the design of the lubricating oil bottom tank, see Chapter 8.06.

If there is limited space below the engine, and the necessary space for a cofferdam is not available (subject to classification approval), the arrangement in Fig. 8.01.03 must be used.

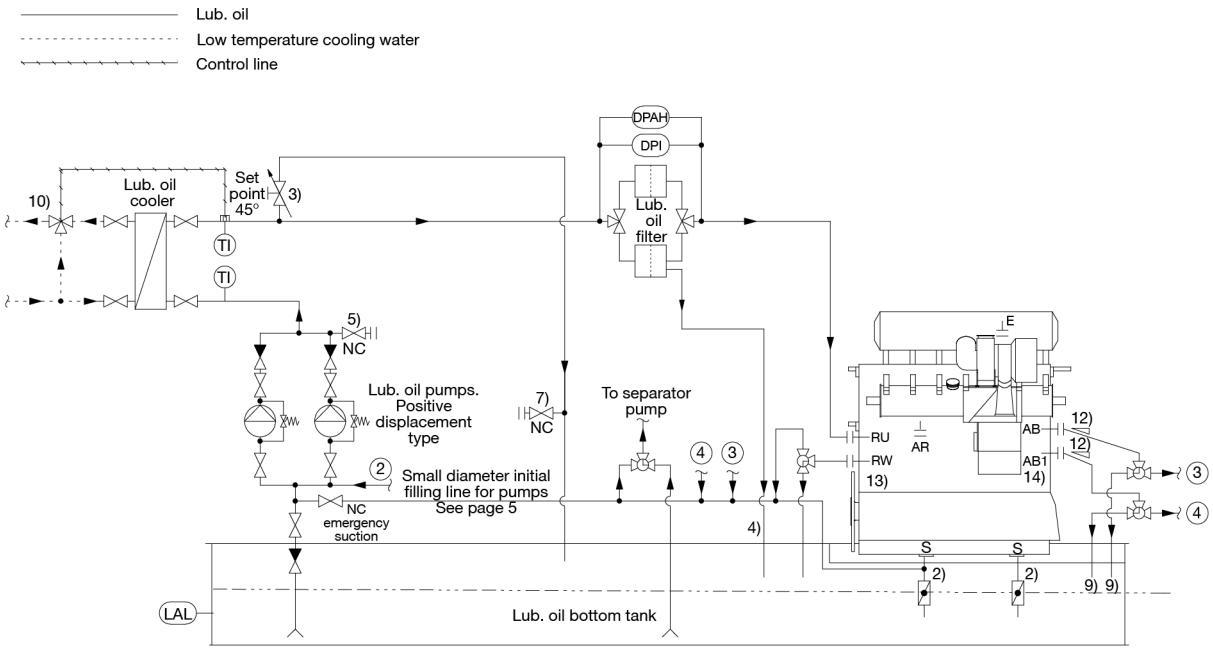

Fig. 8.01.03: Lubricating and cooling oil system arrangement with a positive displacement lubricating oil pump but no cofferdam below the lubricating oil bottom tank

If the lubricating oil tank gets damaged, the arrangement in Fig. 8.01.03 enables emergency suction for both the lubricating oil pump and the separator pump from the lubricating oil bottom tank.

Fig. 8.07.01 shows vent arrangement for engine crankcase, turbochargers, and lubricating oil bottom tank.

For external pipe connections, we prescribe a maximum oil velocity of 1.8 m/s.

Notes on Figs. 8.01.01 – 8.01.03 are described in the following.

Orifice (Note 1 on Fig. 8.01.01)

An orifice should be installed if the inlet pressure to the engine exceeds the figure for "Normal service high" given in the "Guidance Values for Automation". Size, refer to document No.: 5774354-8 "Orifice sizes".

Lubricating oil outlet (Note 2 on Figs. 8.01.01, 8.01.02 and 8.01.03)

Refer to a separate document for the specific engine design specification.

2025-06-17 - en

Manual deaerating valve (Note 3 on Figs. 8.01.01, 8.01.02 and 8.01.03)

A manual venting arrangement with a small diameter should be installed at the highest point. The location can be after or before the lubricating oil cooler.

Backflushing drain (Note 4 on Figs. 8.01.01, 8.01.02 and 8.01.03)

The backflushing line must terminate in the lubricating oil bottom tank close to the separator pump suction line.

Lubricating oil sample connection (Note 5 on Figs. 8.01.01, 8.01.02 and 8.01.03)

DN25 valve connection for oil sample purposes during flushing/flow cleaning of the lubricating oil system at the shipyard and during normal operation.

Lubricating oil sample connection (Note 7 on Figs. 8.01.01, 8.01.02 and 8.01.03)

DN10 valve connection for oil sample purposes.

Drain from turbocharger (Note 9 on Figs. 8.01.01, 8.01.02 and 8.01.03)

As return oil is pressurised by sealing air from the turbocharger, the outlet in the lubricating oil bottom tank must release the air above the oil level as shown in one of the examples in Fig. 8.01.04.

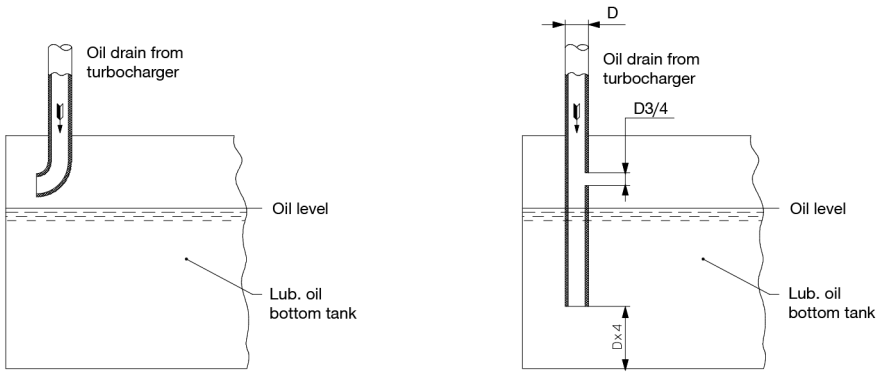

576 88 00-0.12.0d

Fig. 8.01.04: Oil drain from turbocharger

Thermostatic valve location (Note 10 on Figs. 8.01.01, 8.01.02 and 8.01.03)

If the lubricating oil cooler is seawater cooled, the valve must be located on the lubricating oil side.

Venting pipe routing, inclination (Note 12 on Fig. 8.01.01, 8.01.02 and 8.01.03)

Refer to Project Guide Section 8.07.

RW connection (Note 13 on Figs. 8.01.01, 8.01.02 and 8.01.03)

The connection is only used when either Alfa Laval or Hydac type hydraulic control oil (HCO) filter is installed at the engine.

2025-06-17 - en

AB1 connection (Note 14 on Figs. 8.01.01, 8.01.02 and 8.01.03)

Connection only used when Everllence exhaust gas recirculation (EGR) blowers are installed for EGR engines.

2025-06-17 - en

This page is intentionally left blank

2025-06-17 - en

Hydraulic power supply unit

A hydraulic power supply (HPS) unit supplies hydraulic power for the ME hydraulic-mechanical system for activation of fuel injection and exhaust valves. Normal lubricating oil from the main lubricating oil system of the engine (as standard) is used as hydraulic oil. The HPS unit filters the lubricating oil.

HPS connection to lubricating oil system

Internally on the engine, the lubricating oil inlet 'RU' is connected to the HPS unit which supplies hydraulic oil to hydraulic cylinder units (HCU). See Figs. 8.01.01–8.01.03, 16.01.02a and 16.01.02b.

'RW' is the lubricating oil outlet from the automatic backflushing filter.

Hydraulic oil is supplied to the HCU at each cylinder where it is distributed to two multi-way valves: Electronic fuel injection (ELFI) and electronic valve actuation (ELVA), these carry out the fuel injection and open the exhaust valve, respectively. The exhaust valve is closed by a conventional air spring.

The engine control system (ECS) controls the multi-way valves, see Chapter 16.

HPS configurations

The HPS pumps are driven either mechanically by the engine (via a step-up gear from the crankshaft) or electrically. The HPS unit is mounted on the engine, regardless of how the pumps are driven. For mechanically driven pumps, the HPS unit (Fig. 8.02.01) consists of:

- an automatic and a redundant filter
- three to five engine driven main pumps
- two electrically driven start-up pumps
- a safety and accumulator block

2024-05-03 - en

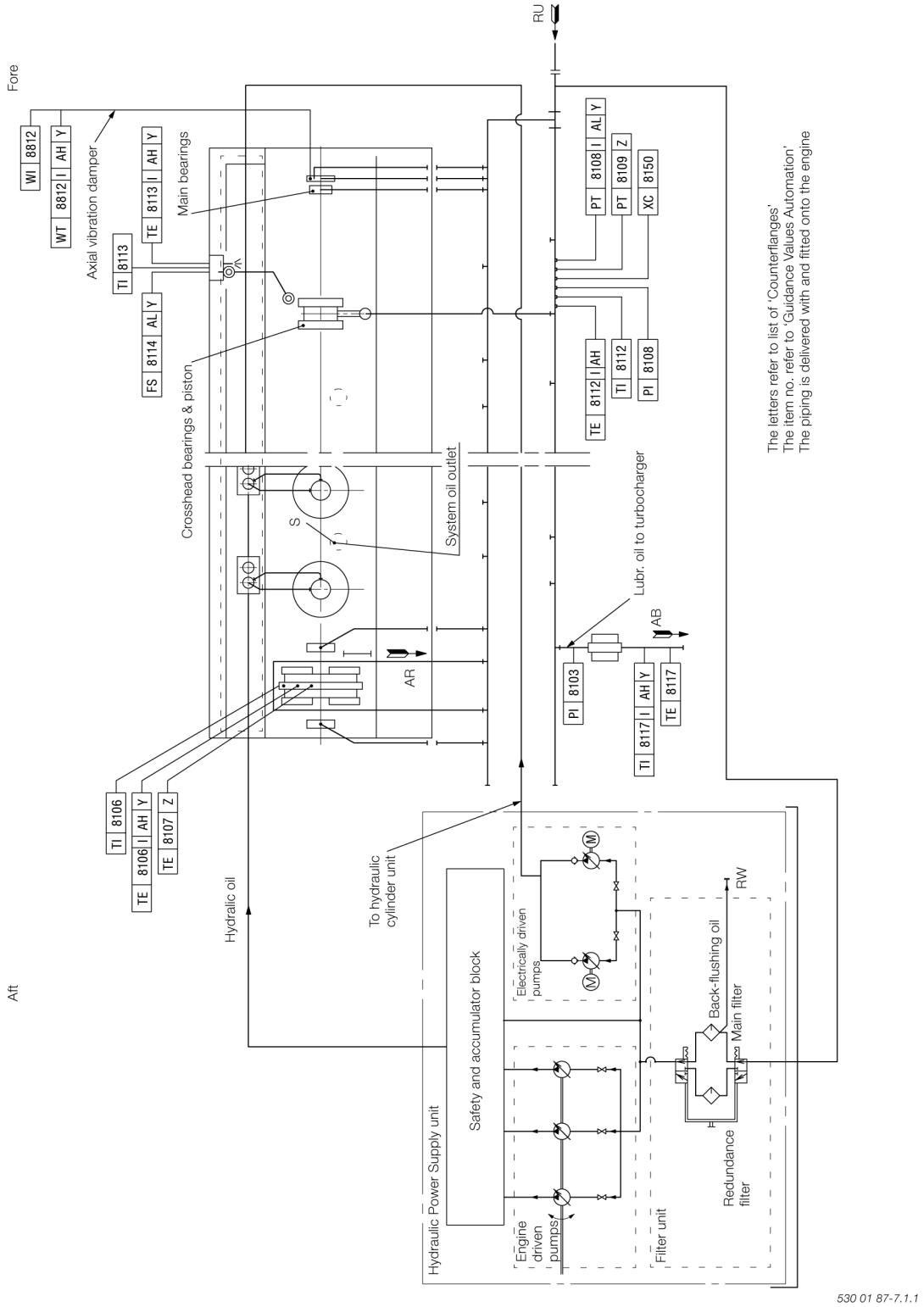

Fig. 8.02.01: Engine driven hydraulic power supply unit and lubricating oil pipes

For electrically driven pumps, the HPS unit has three or more pumps which function as combined main and start-up pumps.

Altogether, two HPS configurations are available:

- STANDARD mechanically driven HPS, with mechanically driven main pumps and start-up pumps with a capacity sufficient to deliver the start-up pressure only. The engine cannot run with all engine-driven main pumps out of operation. If one main pump is out, 66% engine load is available.
- COMBINED mechanically driven HPS unit, with electrically driven start-up pumps with back-up capacity. If all engine-driven pumps are out of operation, at least 15% engine power is available as back-up power.

Motor start method

Direct online start (DOL) is required for all electric motors for the HPS pumps to ensure proper operation under all conditions, including a start-up against maximum pressure in the system.

2024-05-03 - en

This page is intentionally left blank

2024-05-03 - en

Lubricating oil pipes for turbochargers

This section is not applicable

2023-06-06 - en

This page is intentionally left blank

System oil list, consumption and cleaning

System oil – a versatile lubricating oil used for many purposes

System oil is the common designation of a lubricating oil used for different purposes in systems in and on the engine. As mentioned in Section 8.01, the system oil is used as:

1. Circulating oil
2. Hydraulic oil
3. Control oil
4. Sealing oil in dual-fuel engines.

List of system oils

Everllence recommends using system oils (circulating oil) with the following main properties:

- SAE 30 viscosity grade
- BN level 5 - 10
- high corrosion protection
- good anti-oxidant properties
- high detergency and dispersancy.

Adequate dispersion and detergent properties will keep the crankcase and piston cooling spaces clean of deposits.

Table 1 lists major international system oil brands tested in service, and which have passed the testing procedure and obtained a No Objection Letter (NOL). Do not consider this list to be complete, as other system oils with NOLs from Everllence can be equally suitable. System oils are recommended for all Everllence B&W two-stroke engines, independent of Mark number.

Company	Circulating oil SAE 30, BN 5 - 10
Castrol	Castrol CDX 30
Chevron Lubricants	Veritas 800 Marine 30
ENEOS Corporation	Marine S30
ExxonMobil	Mobilgard 300 C
Gulf Marine	GulfSea Superbear 3006
Shell	Shell Melina S 30
Sinopec Lubricant co.	System Oil 3005
SK Lubricants	SK Supermar AS
TotalEnergies Lubmarine	Atlanta Marine D3005

Table 1: Examples of international system oil brands that have an NOL from Everllence

Do not consider the list complete, as oils from other companies can be equally suitable. Further information can be obtained from the engine builder or Everllence, Copenhagen.

2025-10-15 - en

System oil consumption

The system oil consumption depends on factors like backflushing from separators and drain from stuffing boxes.

Furthermore, the consumption varies for different engine sizes as well as operational and maintenance patterns.

System oil offline cleaning

Automatic separators with total or partial discharge must be used.

Fig. 8.04.01 shows a typical system oil cleaning system.

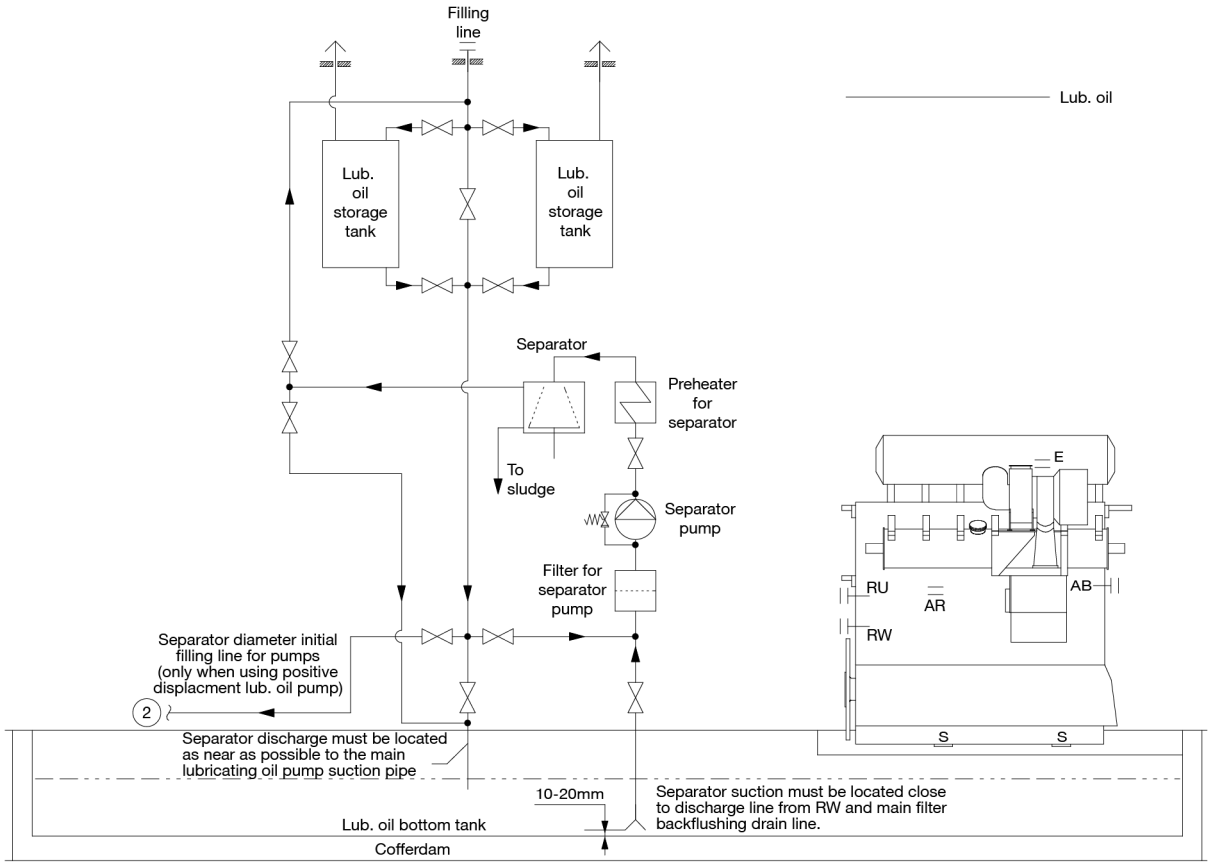

576 88 00-0.12.0f

Fig. 8.04.01: Cleaning system

The nominal capacity of the separator must be according to the supplier's recommendation for system oil, based on the figure:

0.136 litre/kWh

The nominal MCR is used as the total installed power.

2025-10-15 - en

Recommendations of engine lubrication are available in the most current Service Letters on this subject at www.everllence.com --> 'Marine' --> 'Planning tools and downloads' --> 'Service Letters'.

Notwithstanding the foregoing, it remains the responsibility of the owner/operator of an engine to ensure that suitable fuels and lubes are conditioned and used in order to prevent damage to the engine and other equipment on board. Everllence disclaims any and all liability and cannot be held responsible for any damage to the engine, engine components or other equipment on board that may be caused by the use of the mentioned lubricants.

2025-10-15 - en

This page is intentionally left blank

Components and installation

Lubricating oil pump

The lubricating oil pump can be a submerged centrifugal deep well pump or, alternatively, a positive displacement type which requires one of the arrangements shown in Fig. 8.01.01 and Fig. 8.01.02.

Flow rate

The flow capacity must be within a range from 100% to 112% of the capacity stated in the CEAS report, see Section 6.03. Note that the given capacity does not normally consider capacities of internal components such as torsional vibration damper, gearbox, filter backflushing, etc.

Pump head (Ph)

The value given by Everllence is a preliminary guidance based on a maximum pressure drop across cooler and filter of 1.0 bar, and a required inlet pressure at the engine, which is specified at a reference location 1,800 mm above the crankshaft centre.

The actual pump head of the pumps must be based on required inlet pressure to the engine, hydrostatic lifting height, and total actual pressure drop across the lubricating oil system pipe components, specified by the shipyard, at the specified flow rate.

If an automatically cleaned filter is installed, note that to activate the cleaning process, certain makes of filters require a higher oil pressure at the filter inlet than the pump pressure specified. Therefore, the pump capacity should be adequate for this purpose, too.

Engine inlet pressure

The required inlet pressure to the engine must be according to “Guidance values for automation” for the specific engine type. The reference location for the pressure is 1,800 mm above crankshaft centre.

Operating conditions

Lubricating oil viscosity, specified:	75 cSt at 50°C
Lubricating oil viscosity, maximum:	400 cSt, corresponding to a start of the pump with cold lubricating oil
Maximum working temperature:	60° C.

Centrifugal pump selection guideline, see Section 6.04.

Lubricating oil cooler

The lubricating oil cooler must be of either the plate type, or the shell and tube type, and if the lubricating oil cooler is seawater (SW) cooled, it must be made of Titanium.

Lubricating oil flow rate:	See “flow rate” for the lubricating oil pump

2025-06-17 - en

Lubricating oil viscosity, specified:	75 cSt at 50°C
Working pressure:	Pump head, Ph
Test pressure:	According to class rules
Heat dissipation:	Stated in the CEAS report
Max. differential pressure, lubricating oil side:	0.5 bar
Lubricating oil outlet temperature:	45°C

The cooling water flow is stated in the CEAS report. The flow capacity must be within a range from 100% to 110% of the capacity stated.

Max. differential pressure cooling side:	0.2 bar
Cooling water temp. inlet, SW cooled:	minimum 10°C, maximum 32°C
Cooling water temp. inlet, freshwater (FW) cooled:	minimum 10°C, maximum 36°C

Lubricating oil full-flow filter

The filter should be either a manual or an automatic Duplex filter. A sufficient capacity must be provided to allow the specified full amount of oil to flow through each side of the filter at the working temperature and the differential pressure across the filter, as stated below:

Lubricating oil flow rate:	See “flow rate” for lubricating oil pump
Working pressure:	Pump head (Ph)
Test pressure:	According to class rules
Working temperature:	Approximately 45°C
Absolute fineness:	40 µm
Clean filter differential pressure:	Maximum 0.2 bar
Filter cleaning at differential pressure:	Maximum 0.5 bar
Location:	As close as possible to the main engine.

Lubricating oil bottom tank

The design must comply with the specific engine type, engine seating, and recommendation given in Section 8.06.

Lubricating oil storage tank

The number, capacity, arrangement, and design must be according to owner/classification society request, and normal shipyard standard.

Separator

An automatic separator type must be used, either with total discharge or partial discharge.

2025-06-17 - en

The nominal capacity of the separator must be according to the supplier's recommendation for cleaning of lubricating oil based on the figure: 0.136 litre/kWh. The engine NMCR must be used as the total installed power.

Preheater for separator

Type:	Plate, or shell and tube
The nominal flow rate must be in accordance with the separator capacity and supplier's recommendation	
Lubricating oil outlet temperature:	90°C, or in accordance with the recommendation of the separator supplier
Lubricating oil inlet temperature:	45°C

Separator pump

Type:	Positive displacement type
The nominal flow rate must be in accordance with the separator capacity and supplier recommendation.	

Filter for separator pump

The type, size, and necessity of the filter must be in accordance with the recommendation of the separator pump supplier.

Flushing of lubricating oil components and piping system at the shipyard

During installation of the lubricating oil system for the main engine, it is important to minimise or eliminate foreign particles in the system. This is done as a final step on board the vessel, before starting the engine, by flushing the lubricating oil components and piping system of Everllence B&W two-stroke engines.

At the shipyard, the following main points should be observed during handling and flushing of the lubricating oil components and piping system.

Before and during installation

Components delivered from sub-suppliers, such as pumps, coolers and filters, are expected to be clean and rust protected. However, these must be spot-checked before being connected to the piping system.

All piping must be finished in the workshop before mounting on board, i.e. all internal welds must be ground and piping must be acid-treated followed by neutralisation, cleaning, and corrosion protection.

Both ends of all pipes must be closed/sealed during transport.

Before the final installation, carefully check the inside of the pipes for rust and other kinds of foreign particles.

Never leave a pipe end uncovered during assembly.

2025-06-17 - en

Bunkering and filling system

Tanks must be cleaned manually and inspected before filling these with oil. When filling the oil system, Everllence recommends that new oil is bunkered through a 6 µm fine filter, or that a purifier system is used. New oil is normally delivered with a cleanliness level of XX/23/19 according to ISO 4406 and, therefore, requires further cleaning to meet our specification.

Flushing the piping with engine bypass

When flushing the system, the first step is to bypass the main engine oil system. Through temporary piping and/or hosing, the oil is circulated through the vessel's system and directly back to the main engine oil sump tank.

If the system has been out of operation, or unused for a long time, it may be necessary to spot-check for signs of corrosion in the system. Remove end covers, bends, and so on, and inspect accordingly.

During flushing, it is important to keep the oil warm, approx. 60˚C, and the flow of oil as high as possible. For that reason it may be necessary to run two pumps at the same time.

Filtering and removing impurities

To remove dirt and impurities from the oil, it is essential to run the purifier system during the complete flushing period and/or use a bypass unit with a 6 µm fine filter and sump-to-sump filtration, see Fig. 8.05.01.

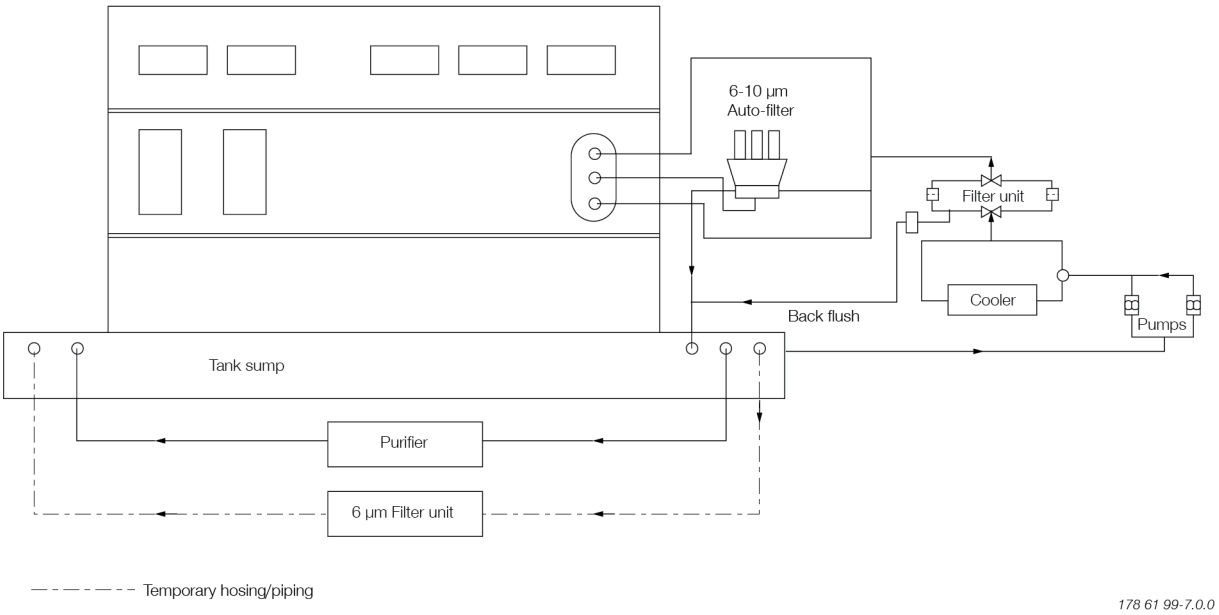

Fig. 8.05.01: Lubricating oil system with temporary hosing/piping for flushing at the shipyard

Furthermore, it is recommended to reduce the filter mesh size of the main filter unit to 10-25 µm (to be changed again after sea trial) and use the 6 µm fine filter already installed in the auto-filter for this temporary installation, see Fig. 8.05.01. This can lead to a reduction of the flushing time.

2025-06-17 - en

The flushing time depends on the system type, the condition of the piping and the experience of the yard. 15–26 hours should be expected.

Cleanliness level, measuring kit and flushing log

Everllence specifies ISO 4406 XX/16/13 as the accepted cleanliness level for ME hydraulic oil systems and second fuel hydraulic oil systems, and ISO 4406 XX/19/15 for the remaining part of the lubricating oil systems.

The amount of contamination contained in system samples can be estimated with the Pall Fluid Contamination Comparator combined with the Portable Analysis Kit, HPCA-Kit-0, which is used by Everllence. This kit and the comparator included is supplied by Pall Corporation, USA (www.pall.com).

It is important to record the flushing condition in statements to all inspectors involved. The Everllence 'Flushing Log form', which is available on request, or a similar form is recommended for this purpose.

Flushing the engine oil system

The second step of flushing the system is to flush the complete engine oil system. The procedure depends on the engine type and the condition in which the engine is delivered from the engine builder. For detailed information, we recommend contacting the engine builder or Everllence.

Inspection and recording in operation

Inspect the filters before and after the sea trial.

During operation of the oil system, check the performance and behaviour of all filters, and note down any abnormal conditions. If any abnormal condition is observed, take immediate action. For example, if a high differential pressure occurs at short intervals, or in the case of abnormal backflushing, check the filters and take appropriate action.

Further information and recommendations regarding flushing, the specified cleanliness level and how to measure it, and how to use the NAS 1638 oil cleanliness code as an alternative to ISO 4406, are available in our publication: Filtration Handbook.

The publication is available at www.everllence.com → 'Marine' →'Planning Tools and Downloads' → 'Technical Papers'.

2025-06-17 - en

Lubricating oil outlet

If required by class rules, a protecting ring, position 1–4 in Fig. 8.05.02, should be installed.

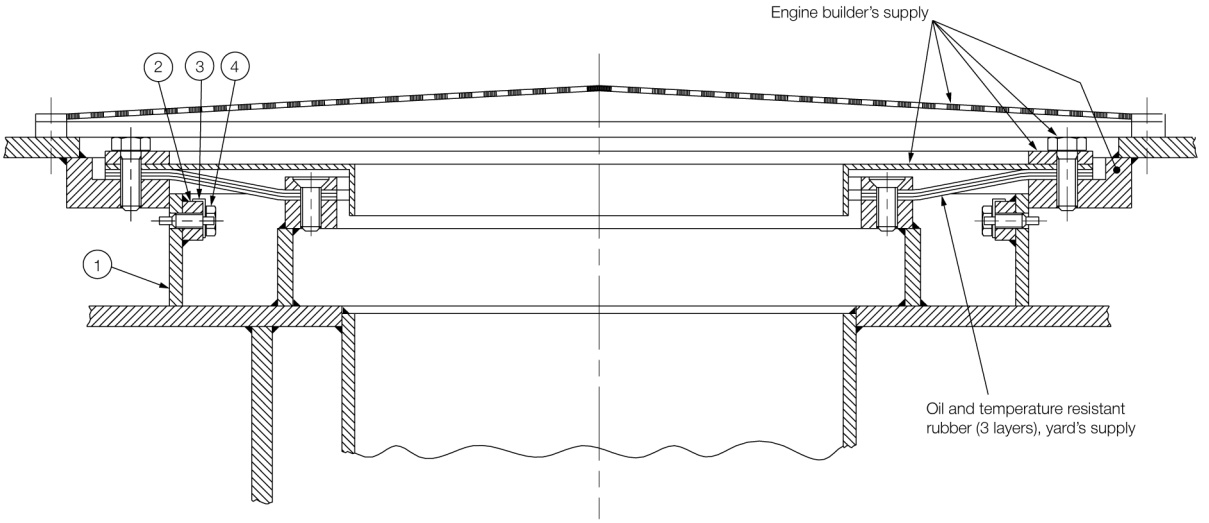

Fig. 8.05.02: Lubricating oil outlet

The ring should be placed loose on the tank top guided by the hole in the flange.

In the vertical direction, it is secured with a screw (position 4) to prevent wear of the rubber plate.

2025-06-17 - en

Lubricating oil bottom tank

The recommendations for designing the lubricating oil bottom tank are based on the functions of the tank for two-stroke marine combustion engines:

- Avoid that main lubricating oil pumps draw in air by complying with the requirements to suction conditions of classification societies and SOLAS
- Contain the oil volume necessary to avoid a too high circulating rate
- Settle solid particles to be separated by the centrifuges
- Deaerate and degas the lubricating oil
- Storage tank for the total volume of lubricating oil, since oil from the engine automatically drains to the bottom tank when the engine is stopped and the lubricating circulation pump switched off.

A detailed description of requirements, calculated examples, and other design guidelines are available for download at

https:/everllence.com → Marine → 'Planning tools & Downloads' → 'Installation Drawings'.

Specify the engine and accept ‘Conditions for use’ before clicking ‘Download Drawings’.

The bottom tank is placed below the crankcase oil pan to facilitate the oil flow from crankcase outlets. To avoid bedplate distortions, the tank design must have a symmetrical cross-section. Fig. 8.06.01 shows the lubricating oil bottom tank with added descriptions of dimensions, pump positions, venting pipes, oil outlets, pump suction, and lubricating oil flow pattern.

2025-06-17 - en

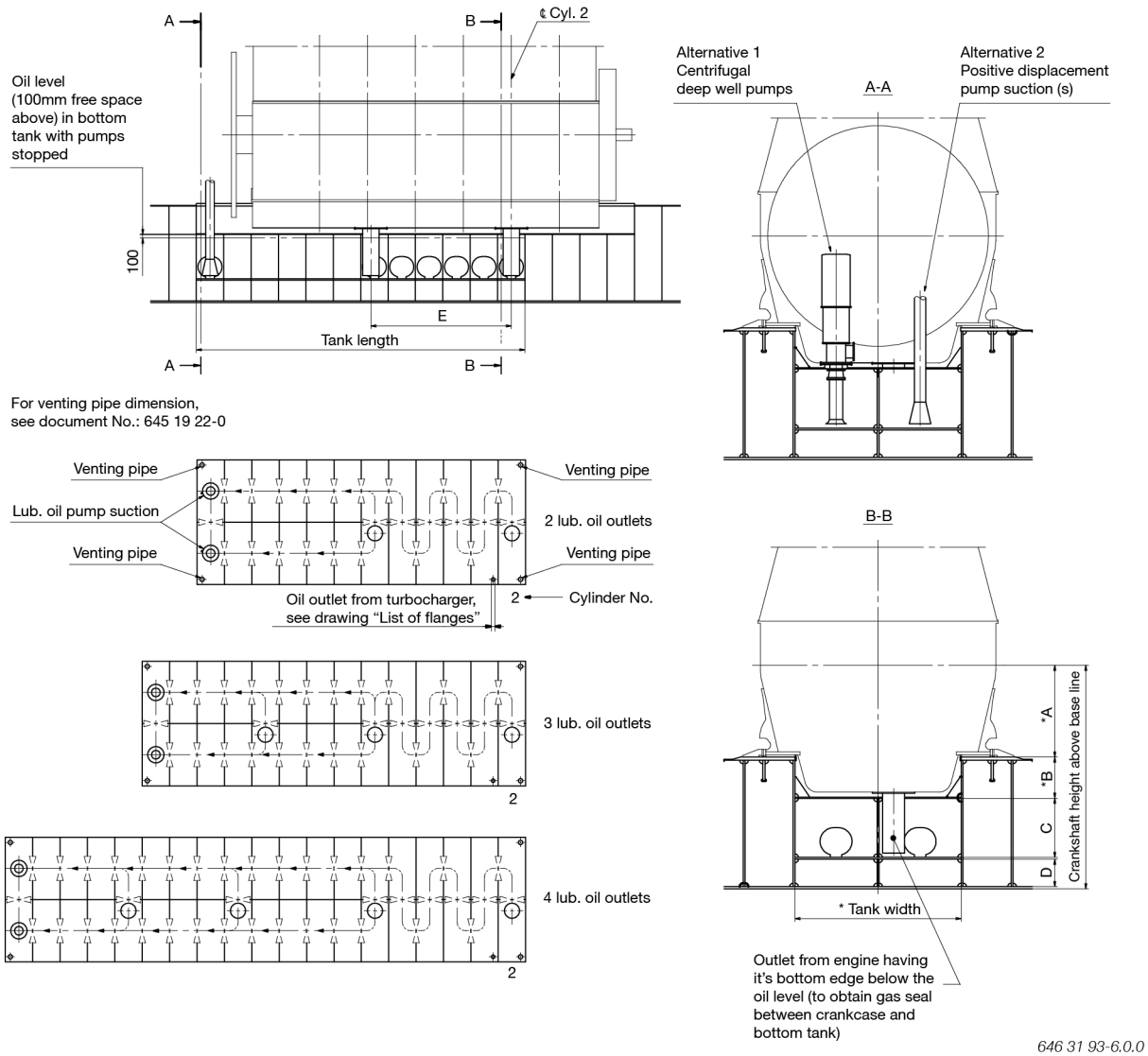

Fig. 8.06.01: Lubricating oil bottom tank and descriptions of dimensions, pump position, venting pipes, oil outlets, and lubricating oil flow patterns

On Fig. 8.06.01, the dimensions indicated are:

A. From centre of crankshaft to top of foundation, based on 50 mm thickness of epoxy supporting chocks

B. From top of foundation to top of lubricating oil bottom tank

C. Height of lubricating oil bottom tank

D. Min. height of cofferdam according to class requirement

E. Distance between outlets, see for example Project Guide section 5.09.

* For dimension value, see the drawing "Engine seating, epoxy chock".

2025-06-17 - en

Requirements for lubricating oil bottom tank volume and main lubricating oil pump suction conditions

This section describes the two important requirements of Everllence and classification societies for designing the lubricating oil bottom tank:

1. Everllence' requirement: Based on pump flow, the tank size must comply with a maximum circulation rate per hour
2. Classification society requirement: According to the main engine installation design, ship designers must verify that the engine will be fully operational considering trim and heeling conditions of the vessel. This means they must ensure that the lubricating oil pump will not lose suction capability.

It is an iterative process to meet the design requirements when determining the tank size and the position of the lubricating oil pump suction because of the interrelation between operational tank volume and pump suction. If the pump suction requirement is not met, for example, which requires changes to tank boundaries, a new calculation is required to check whether the tank meets both requirements.

1. Everllence requirements

The following section describes Everllence' requirements to maximum lubricating oil circulation rate per hour, and the minimum volume of the lubricating oil bottom tank. Furthermore, the section describes the calculation of the operational oil amount in the engine, which is needed when designing the lubricating oil bottom tank.

Maximum lubricating oil circulation rate per hour

The volume of the lubricating oil bottom tank must be large enough to avoid a too high circulation rate in order to:

- Settle solid particles, which will be separated by the centrifuges
- Deaerate or degas the lubricating oil

The minimum volume of the lubricating oil bottom tank has to be dimensioned according to the main lubricating oil pump capacity in CEAS, and Everllence' recommended maximum circulating rate of 18 times per hour. This means that the minimum tank volume is equal to the CEAS pump capacity divided by 18. If the tank size turns out to have a lower, or much lower circulation rate than 18 shifts per hour, this is fully acceptable.

The CEAS platform is available here: CEAS engine calcuations.

Operational oil amount in engine

Designing the lubricating oil bottom tank, including fulfilling lubricating oil pump suction conditions, requires knowledge about the amount of oil in the main engine when the lubricating oil pump is running. This oil amount can be calculated with the formula:

Oil amount (m^3/h) = $((Q_e + Q_h) \times 0.8 + Q_p)/850$,

where the values of:

- Mass of oil in engine system Q_e (kg)
- Mass of oil in oil pan Q_p (kg)

2025-06-17 - en

- Mass of oil in hydraulic system Q_h (kg)

can be found in the Project Guide document 'Water and oil calculation' in section 5.08 for the specific engine type and configuration.

2. SOLAS and classification society requirements

When designing the lubricating oil bottom tank, one of the most important parameters to consider is the location of the main lubricating oil pump suction. The following section describes SOLAS and classification society requirements related to lubricating oil pump suction.

Lubricating oil pump suction

The pump suction must always be submerged in oil to avoid any risk of drawing in air when the vessel is inclined (trim and list combined) during normal operation and in rough sea. Drawing in air could cause lubricating oil supply failure, even momentarily, which could seriously damage the main engine bearings.

The oil pump suction pipe position must ensure that the lower minimum suction height is always obtained (i.e., the suction pipe is covered by oil up to a certain height). This is also a requirement even with a minimum oil level in service, and during simultaneous athwartships and fore, or aft, inclinations.

Table 8.06.01 shows examples of SOLAS and classification societies requirements for main engine installation regarding vessel list, rolling, trim, and pitch, which must be considered.

Athwartships		For and aft	
Static	Dynamic	Static [1]	Dynamic
±15°	±22.5°	±5°	±7.5°

[1] If the length of the ship exceeds 100 m, the fore and aft static angle of inclination may be taken as 500/L degrees, where L = rule length of the ship. Consult the specific classification society rules.

Table 8.06.01: Example of stated classification society requirements for main engine operation based on list, rolling, trim, and pitch

Normally, classification societies only require that static inclinations are considered, since the lubricating oil bottom tank is divided into many compartments based on girders plates and floor plates with man-hole openings making flow restrictions. However, it is entirely up to the classification society to interpret their own rules and set their recommendations in this regard.

To determine if the lubricating oil pump suction conditions comply with SOLAS and classification society requirements, we recommend that the shipyard or ship design company use a ship design software, for example NAPA, or another equivalent design tool, to facilitate the evaluation. A ship design software is the most applicable tool but simple 3D CAD drawing tools can also be used for the evaluation.

By using a fictive sounding position at the proposed location in Fig. 8.06.02 for evaluating the suction capability, it is possible to check whether the required minimum suction height has been reached.

2025-06-17 - en

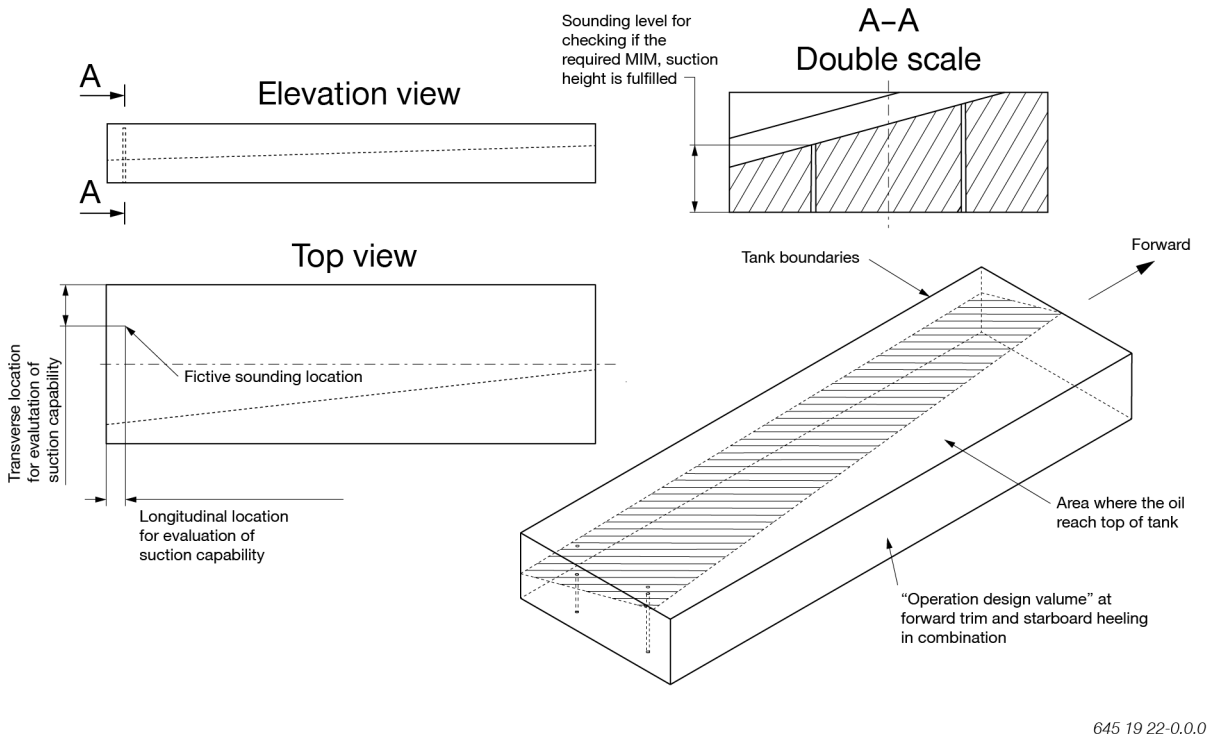

Fig. 8.06.02: 3D-sketch of tank and oil volume for evaluating the pump suction capability for a trimmed and heeled ship

2025-06-17 - en

This page is intentionally left blank

2025-06-17 - en

Venting and drain pipes

General

Fig. 8.07.01 shows venting arrangements for engine crankcase, turbocharger, and lubricating oil bottom tank.

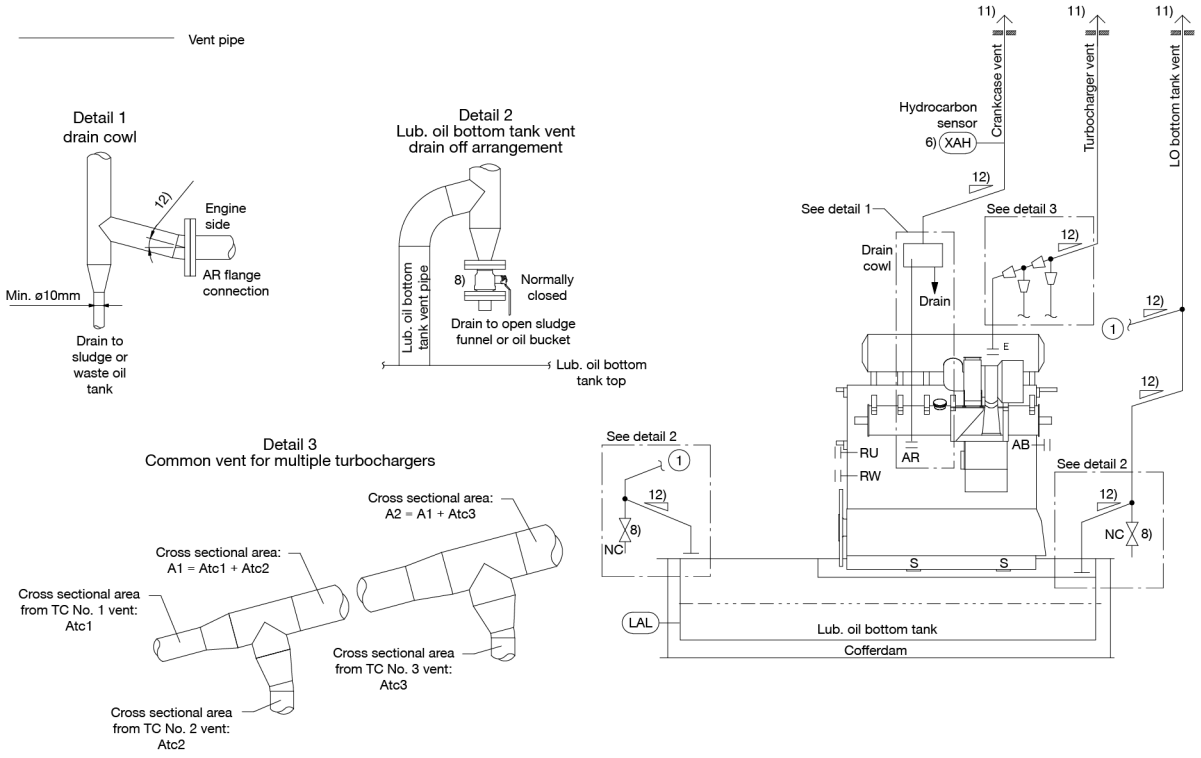

Fig. 8.07.01: Venting arrangement for engine crankcase, turbocharger, and lubricating oil bottom tank

Notes on Fig. 8.07.01 are described in the following.

Crankcase venting line

The crankcase venting line must be made with a drain cowl as indicated in Fig. 8.07.01 and detail 1, for draining of a potential build-up of condensate in the venting line. This drain cowl must be located as close as possible to the engine flange for crankcase venting.

Hydrocarbon sensor (note 6)

1. Engine type: ME, fuel oil only

- A hydrocarbon (HC) sensor and a special vent outlet location are not relevant.

2024-11-14 - en

2. Engine type: ME-GI/-GIE/-LGIM/-LGIP

- A hydrocarbon sensor and a special vent outlet location are not relevant but this can be overruled by the applicable flag state authority, who might require the following:

  – Tank venting: The venting outlet constitutes a hazardous zone and has to be placed outside a safe area. The outside hazardous zone must be according to flag state/classification society requirement.

  – Monitoring: A hydrocarbon alarm sensor should be installed in the vent line.

The piping must be terminated in open air:
See 'Routing of vent pipes' (Note 11)

Pipe routing: See 'Venting pipe routing, inclination' (Note 12)

Lubricating oil bottom tank venting lines

The lubricating oil bottom tank must be provided with sufficient venting. The venting pipes should be arranged at the corners of the tank or, as a minimum, at each end of the tank, to secure venting at any trim of the ship. The venting pipe sizes from tanks are subject to classification society rules.

A drain system with a design as shown in note 6 and detail 2 in Fig. 8.07.01 can be installed for each of the air venting pipes from the lubricating oil bottom tank. This gives the possibility to drain condensate and foreign particles from venting pipes and, thereby, not contaminate the oil in the lubricating oil bottom tank.

Drain valves must be opened and closed frequently during:

- Flushing procedure before initial engine start-up
- Sea-trial.

The piping must be terminated in open air:
See 'Routing of vent pipes' (Note 11)

Pipe routing: See 'Venting pipe routing, inclination' (Note 12)

Turbocharger vent line

A turbocharger vent line must be made going from the turbochargers to the atmosphere. If more than one turbocharger vent line is connected to the same vent line manifold, it is important that the vent pipe is connected to the bottom of the manifold pipe, otherwise oil mist will accumulate in the pipe. Furthermore, the cross-sectional area of the vent pipe must be increased before connecting it to a common line. This is shown in Fig. 8.07.01, detail 3.

The piping must be terminated in open air:
See 'Routing of vent pipes' (Note 11)

Pipe routing: See 'Venting pipe routing, inclination' (Note 12)

Routing of vent pipes (Note 11 on Fig. 8.07.01)

It is recommended that each vent line from the various engine connections is routed separately to the open air outside the engine room. They should not be connected to each other or be connected to a common vent chamber.

2024-11-14 - en

Venting pipe routing, inclination
(Note 12 on Figs. 8.01.01, 8.01.02, 8.01.03 and 8.07.01)

The vent piping routing has to be steadily ascending so no potential pipe pockets can occur according to the vessel static longitudinal and transverse inclination. In general, the longitudinal inclination used must be min. 5° (might be smaller based on the length of the vessel and applicable classification society rules) and the transverse inclination min. 15°. If for some reason a pipe pocket cannot be avoided, a special drain pipe connection to the sludge or waste oil tank must be installed in the bottom part of each pipe pocket to avoid an oil-filled pocket.

2024-11-14 - en

This page is intentionally left blank

2024-11-14 - en

Turbocharger lubricating oil system

As an option, the engine can be prepared for a separate turbocharger (TC) lubricating oil system, see Fig. 8.08.01.

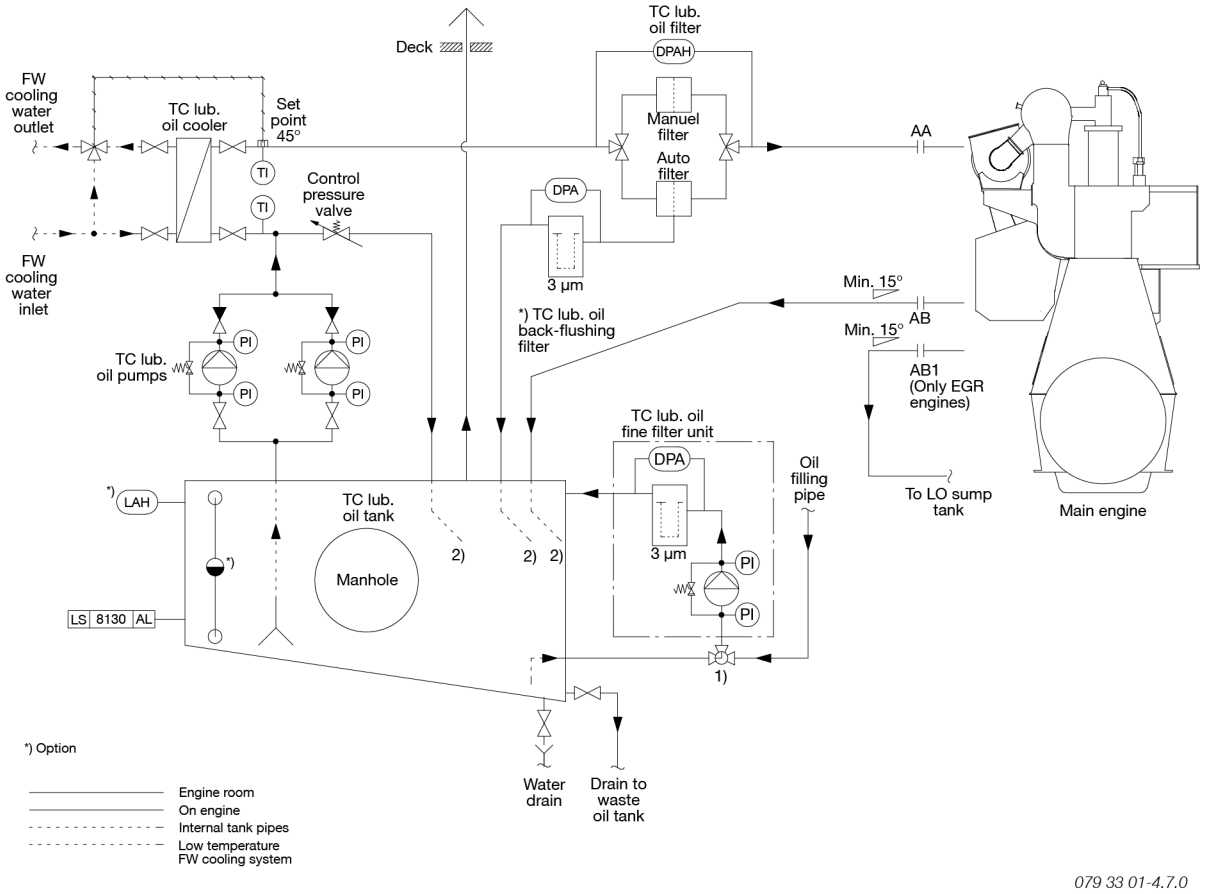

Fig. 8.08.01: Separate TC lubricating oil system

The turbocharger lubricating oil system can be a separate unit, or it can be integrated in the engine room with the various components placed and fastened to the steel structure of the engine room.

The design and dimensioning of the various components gives a reliable system capable of supplying lubricating oil to the inlet of the engine-mounted turbocharger at a constant pressure, both at engine stand-by and at various engine loads.

Initial filling and topping up (Note 1 on Fig. 8.08.01)

For all operations involving adding oil, oil filling must be done via the TC lubricating oil fine filter unit.

Turbocharger lubricating oil return to tank (Note 2 on Fig. 8.08.01)

Return pipe outlets inside the tank must be placed near the tank side to avoid formation of air bubbles in the turbocharger lubricating oil.

2025-06-17 - en

Turbocharger lubricating oil

Everllence recommends the use of turbocharger lubricating oil with the following main properties:

- SAE 30 viscosity grade
- BN level: 5–10

For further details, reference is made to drawing no. 5832509-5.

Turbocharger lubricating oil system components

Turbocharger lubricating oil tank

The tank must be designed as a separate loose tank (mild steel plate) or as part of the ship structure. The tank must be made with a sloped bottom. The tank should be placed at least 1 m below the turbocharger lubricating oil outlet flange “AB” on Fig. 8.08.01.

The tank volume must be 10% of the pump flow rate given in the CEAS report. The calculated tank volume is the volume between high- and low-level alarms.

The design pressure must be according to class rules for tanks vented to the atmosphere.

The low-level alarm must be placed at a level above the minimum level for pump suction, including considerations of vessel athwartships and fore/aft inclinations (according to classification society rules). The low-level alarm must be according to the document “Guidance Value – Automation”, sensor name “LS 8130 AL”.

The optional high-level alarm must be placed so that the tank can receive the TC lubricating oil drain amount from the engine without overflowing.

Cleaning

Before using the tank, it must be cleaned properly:

- Any slag (and other impurities) after welding must be removed mechanically
- Clean all visible impurities
- Treat scale on the surface with a descaling agent
- If rust is found, treat the surface with a rust-removing agent
- Use a vacuum cleaner to remove small particles from the surface and corners
- Wash the surface with grease-dissolving liquid. Cleaned areas must be protected with an antirust agent immediately after they have been cleaned to provide protection until the system is filled up. The agent must be of a type that can be mixed with lubricating oil.

Paint and protection

It is very important to ensure that the paint, if any, and other protecting products used in the tank are oil resistant, and that the application method has been thoroughly carried out, considering that a bad quality of paint may be worse than no paint at all.

In general, it is recommended to coat the tank with clean oil.

2025-06-17 - en

Turbocharger lubricating oil pump

The turbocharger lubricating oil pump should be a positive displacement type pump with a build-in overflow safety valve.

The flow rate is stated in the CEAS report. The flow capacity must be within a range from 100% to 112% of the capacity stated.

Pump head (Ph):	4 bar
Max. pump discharge pressure:	5 barg
TC lubricating oil viscosity, specified:	75 cSt at 50°C
TC lubricating oil viscosity, maximum:	400 cSt, corresponding to start of pump with cold lubricating oil
Maximum temperature:	70°C
Classification and pressure test:	According to class rules

Turbocharger lubricating oil cooler

Type:	Plate or shell and tube
Material:	Titanium, if seawater cooled
TC lubricating oil flow rate:	See “flow rate” for the turbocharger lubricating oil pump
TC lubricating oil viscosity, specified:	75 cSt at 50°C
Working pressure:	Max. pump discharge pressure 5 barg
Classification and pressure test:	According to class rules
Heat dissipation:	Stated in the CEAS report
Max. differential pressure TC lubricating oil side:	0.5 bar
TC lubricating oil outlet setpoint temperature:	45°C
Cooling water flow:	Stated in the CEAS report
Max. differential pressure cooling side:	0.2 bar
Cooling water temp. inlet, FW cooled:	Minimum 0°C, maximum 36°C

Control pressure valve

The function of the valve is to create a constant supply pressure to the TC lubricating oil system independent of the engine load. The valve is the engine builder scope of supply.

2025-06-17 - en

Turbocharger lubricating oil full-flow filter

The filter should be either a manual or an automatic Duplex filter. A sufficient capacity must be provided to allow the specified full amount of oil to flow through each side of the filter at the working temperature and the differential pressure across the filter, as stated below:

Lubricating oil flow rate:	See “flow rate” for the lubricating oil pump
Working pressure:	Pump head (Ph)
Test pressure:	According to class rules
Working temperature:	Approximately 45°C
Absolute fineness:	50 µm
Clean filter differential pressure:	Maximum 0.2 bar
Filter cleaning at differential pressure:	Maximum 0.5 bar
Location:	As close as possible to the main engine.

Offline fine filter unit

A continuously running offline filtration must be performed to remove particles and oil degradation products in the separate TC lubricating oil system. This is performed by a fine filter unit, including a pump and filter. Furthermore, the offline filtration unit must be able to clean bunkered TC lubricating oil before the new oil enters the tank.

The capacity Q of the TC lubricating oil fine filter unit must correspond to cleaning of 1/5 of the tank volume per hour.

$Q\ (l/h) = V_{tank}\ (m^3) \times 1/5\ (h^{-1}) \times 1000\ (l/m^3)$

Example: $V_{tank} = 2\ m^3$, $Q = 400\ l/h$

Fine filter filtration type:	Deep-bed cartridge filtration
Filter fineness:	3 µm (absolute)

Turbocharger lubricating oil backflushing filter (optional)

Fine filter filtration type:	Deep-bed cartridge filtration
Filter fineness:	3 µm (absolute)

2025-06-17 - en

Thermostatic regulating valve

Freshwater flow:	See CEAS report and cooling water flow for “turbocharger lubricating oil cooler”
TC lubricating oil outlet, setpoint temperature:	45°C

TC lubricating oil temperature range and alarm must be according to values stated in the document “Guidance Value – Automation”, sensor name “TE 8112 I-AH-AI-Y”.

Max. working temperature:	Up to 60 °C
Max. pressure drop:	0.3 bar
Actuator type:	Electric or pneumatic
Recommended leak rate:	Less than 0.5% of nominal flow

2025-06-17 - en

This page is intentionally left blank

2025-06-17 - en

Hydraulic control oil system

As an option, the engine can be prepared for a separate hydraulic control oil (HCO) system, see Fig. 8.09.01.

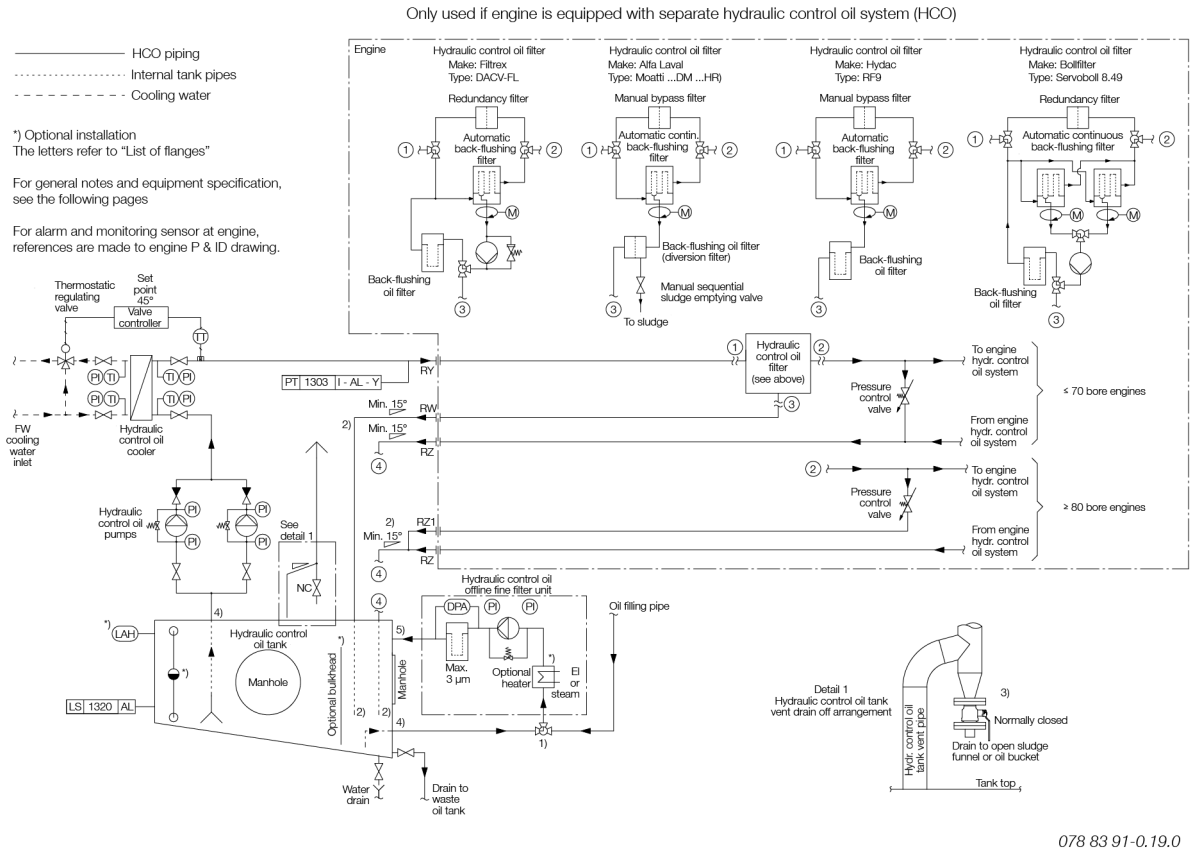

Fig. 8.09.01: Hydraulic control oil (HCO) system

The HCO system can be a separate unit, or it can be integrated in the engine room with the various components placed and fastened to the steel structure of the engine room.

The design and dimensioning of the various components gives a reliable system capable of supplying low-pressure oil to the inlet of the engine-mounted high-pressure HCO pumps at a constant pressure and temperature, both at engine standby and various engine loads.

Initial filling and topping up the HCO system (Note 1 on Fig. 8.09.01)

All oil used during the initial filling and topping up must be filtered through a filter with a filtration rating of min. 3 µm (absolute).

Hydraulic control oil return to tank (Note 2 on Fig. 8.09.01)

The return (drain) pipe between the "RZ" flange and the HCO tank must be installed with a downward slope of min. 15°. The return pipe must be sized to allow the oil to flow back by natural gravity, preventing pressure buildup and leakage at the engine-side of the "RZ" flange, even if both HCO pumps are engaged simultaneously.

2026-01-28 - en

To avoid formation of air bubbles, return pipes must terminate near the tank side below the lowest oil level.

Vent pipe drain arrangement - optional (Note 3 on Fig. 8.09.01)

To prevent contamination of the oil in the HCO tank, a drain arrangement for the air vent pipes from the HCO tank can be installed to drain condensate and remove foreign particles from the vent pipes.

Drain valves must be frequently opened and closed during:

- Flushing procedure before initial engine start-up
- Sea trial
- Humid ambient conditions

Quick-closing valve for suction lines (Note 4 on Fig. 8.09.01)

The classification society may require a quick closing valve for suction lines.

Fine filter discharge outlet (Note 5 on Fig. 8.09.01)

The fine filter discharge line must terminate below the lowest oil level and close to the HCO pump suction line.

Hydraulic control oil and cleanliness

Everllence recommends the use of HCO with the following main properties:

- SAE 30 viscosity grade
- BN level: 5–10.

For further details, see drawing no. 5832509-5.

The hydraulic control oil must fulfil the cleanliness level ISO 4406 XX/16/13 equivalent to NAS 1638 Code 8.

Everllence can supply information and recommendations for:

- Flushing
- The specified cleanliness level and how it is measured
- Applying the NAS 1638 oil cleanliness code as an alternative to ISO 4406.

Hydraulic control oil system components

Hydraulic control oil tank

Requirements for the design and location of the HCO tank:

- separate free-standing tank (mild steel plate) or structural hull tank
- sloped bottom
- located above the double bottom and at least 1 m below the hydraulic outlet flange "RZ"

The HCO tank volume is defined as the volume between high- and low-level alarms and it is calculated as 10% of the hourly HCO pump flow rate in the CEAS report.

The design pressure must be according to class rules for tanks vented to the atmosphere.

2026-01-28 - en

The low-level alarm must be placed above the minimum pump suction level. The applied level margin must accommodate the vessel's athwartships and forward/aft inclination (according to classification society rules). The low-level alarm must be according to the document “Guidance Values – Automation”, sensor TAG “LS 1320 AL”.

The need for a high-level alarm is subject to the requirements of the shipowner and/or the classification society. The high-level alarm must be placed below the maximum allowable filling level. The applied level margin must accommodate both the HCO drain amount from the engine and an additional margin to prevent overflow.

Return compartment (optional)

An optional return compartment can be arranged – for example, by installing an internal bulkhead – to prevent mixing and to concentrate the return oil in this compartment for treatment through the offline filter. This configuration is particularly useful under conditions where excessive slushing may occur.

Means of completely draining the tank must be provided, either by low-point drain openings in the internal bulkhead (see Fig. 8.09.01) or by separate drain lines.

Access for cleaning inside the return compartment must be arranged. Regardless of draining concept, the tank level and low-alarm sensor(s) must be installed outside the return compartment.

Cleaning

Before using the tank, it must be cleaned properly:

- Remove any slag (and other impurities) after welding mechanically
- Clean all visible impurities
- Treat scale on the surface with a descaling agent
- If rust is found, treat the surface with rust-removing agent
- Use a vacuum cleaner to remove small particles from the surface and corners
- Wash the surface with grease-dissolving liquid. To provide protection until the system is filled with oil, cleaned areas must be protected with an anti-rust agent immediately after they have been cleaned. The agent must be of a type that can be mixed with lubricating oil.

Paint and protection

It is very important to ensure that the paint, if any, and other protecting products used in the tank are oil resistant, and that the application method has been thoroughly carried out, considering that a bad quality of paint may be worse than no paint at all.

In general, it is recommended to coat the tank with clean oil.

Hydraulic control oil pump

The HCO pump should be a positive displacement type pump with a build-in overflow safety valve.

The flow rate is stated in the CEAS report. The flow capacity must be within a range from 100% to 112% of the capacity stated.

2026-01-28 - en

Pump head (Ph):	4 bar
Max. pump discharge pressure:	5 barg
HCO viscosity, specified:	75 cSt at 50°C
HCO viscosity, maximum:	400 cSt, corresponding to starting the pump with cold HCO
Maximum temperature:	70°C
Classification and pressure test:	According to class rules

Hydraulic control oil cooler

Type:	Plate or shell and tube
HCO flow rate:	See “flow rate” for HCO pump
HCO viscosity, specified:	75 cSt at 50°C
Working pressure:	Max. pump discharge pressure 5 barg
Classification and pressure test:	According to class rules
Heat dissipation:	Stated in the CEAS report
Max. differential pressure HCO side:	0.5 bar
HCO outlet setpoint temperature:	45°C
Cooling water flow:	Stated in the CEAS report
Max. differential pressure cooling side:	0.2 bar
Cooling water temp. inlet, FW cooled:	Minimum 0°C, maximum 36°C

Pressure control valve

The function of the valve is to create a constant supply pressure to the HCO system independent of the engine load. The pressure control valve is the engine builder scope of supply.

Hydraulic control oil filter

The filter is an automatic self-cleaning and backflushing type. See the filter quality specification in the document 0744631-6.

Filter supplier options: Filtrex, Alfa Laval, Hydac and Bollfilter.

Hydraulic control oil – offline fine filter unit

A continuously running offline filtration must be performed to remove particles and oil degradation products in the separate HCO system. This can be performed by a fine filter unit, including a pump and filter. Furthermore, the offline filtration unit must be capable of cleaning new HCO, during filling or topping up the HCO system.

The HCO fine filter unit capacity “Q” must correspond to cleaning of 1/5 of the tank volume per hour.

$Q\ (l/h) = V_{tank}\ (m^3) \times 1/5\ (h^{-1}) \times 1000\ (l/m^3)$

Example: $V_{tank} = 2\ m^3$, $Q = 400\ l/h$

Fine filter filtration type:	Deep-bed cartridge filtration

2026-01-28 - en

Filter fineness:	Max. 3 µm (absolute)

Preheater (optional)

An optional preheater can be installed in the supply line of the offline fine filter. This is particularly useful when filling or topping up the HCO system with cold oil.

Thermostatic regulating valve

Water flow:	See CEAS report and cooling water flow for HCO cooler
HCO outlet setpoint temperature:	45°C

HCO temperature range and alarm must be according to values stated in the document “Guidance Values – Automation”, sensor TAG “TE 1310 AH-Y”.

Max. working temperature:	Up to 60°C
Max. pressure drop:	0.3 bar
Actuator type:	Electric or pneumatic
Recommended leak rate:	Less than 0.5% of nominal flow.

2026-01-28 - en

This page is intentionally left blank

01 Engine Design
02 Engine Layout and Load Diagrams, SFOC, dot 5
03 Turbocharger Selection & Exhaust Gas Bypass
04 Electricity Production
05 Installation Aspects
06 List of Capacities: Pumps, Coolers & Exhaust Gas
07 Fuel
08 Lubricating Oil
09 Cylinder Lubrication
10 Piston Rod Stuffing Box Drain Oil
11 Low-temperature Cooling Water
12 High-temperature Cooling Water
13 Starting and Control Air
14 Scavenge Air
15 Exhaust Gas
16 Engine Control System
17 Vibration Aspects
18 Monitoring Systems and Instrumentation
19 Dispatch Pattern, Testing, Spares and Tools
20 Project Support and Documentation
21 Appendix

This page is intentionally left blank

Cylinder oil specification and system description

Cylinder lubricators

Each cylinder liner has a number of lubricating quills through which oil is introduced by Everllence B&W Alpha Cylinder Lubricators, see Section 9.02.

Cylinder lubricating oil is pumped into the cylinder (via non-return valves) when the piston rings pass the lubricating orifices during the upward stroke.

The control of the lubricators is integrated in the engine control system (ME-ECS). Fig. 9.02.02b shows an overview of the cylinder lubricating oil control system.

Cylinder lubrication strategy

The general lubrication strategy is to match the cylinder oil with the fuel type and its sulphur content.

When operating on liquid natural gas (LNG), ethane liquid petroleum gas (LPG) or methanol, the same cylinder oil is used as for operation on ultralow-sulphur fuel oil (ULSFO, <0.10% S) to very-low-sulphur fuel oil (VLSFO, <0.50% S).

For specific lubrication guidelines, please refer to the most recent lubrication guideline for your specific engine type, for example service letters and circular letters. Service letters are publicly available.

Circular letters are only distributed to customers with specific engine types.

Cylinder oil

Everllence is continously improving the engine design. Highly fuel-efficient engines with higher pressures and higher temperatures require lubricants with matching performance. Cylinder oils must be designed to:

- lubricate pistons and liners
- reduce friction
- introduce wear protection
- minimise risk of seizures
- neutralise acids and oxidation products in accordance with the engine requirement,
- and keep pistons, piston rings, ring grooves, ringlands, and liners clean.

The cylinder oils are divided into two performance categories, Cat. I and Cat. II, of which Cat. II is the overall higher performing category.

Everllence recommends using cylinder oils with the following main properties:

- kinematic viscoity
  - minimum 18.5 cSt at 100°C
  - maximum 21.9 cSt at 100°C
- viscosity index (VI): min. 95
- high detergency
- alkalinity or base number (BN).

2026-05-06 - en

Category II cylinder oils – all Everllence B&W engines and recommended for Mk. 9 and higher

Cat. II cylinder oils have an excellent overall performance with a special focus on cleaning ability. In order to receive this status, the cylinder oil must complete extensive testing. The lubricants awarded Cat. II status are 40 BN, 100 BN, and 140 BN cylinder oils. Cylinder oils with 100 and 140 BN are mainly used for high-sulphur fuel applications. The Cat. II 40 BN oils can be used for operation on <0.10-0.50%S fuels and LNG, ethane, methanol, and LPG.

Table 9.01.01 lists major international system oil brands tested in service with acceptable results, and which have passed the testing procedure and obtained an No Objection Letter (NOL). Do not consider this list to be complete, as other Cat. II cylinder oils with NOLs from Everllence can be equally suitable.

Category II cylinder oils as stated in SL2022-728*			
Company	Cylinder oils		
	140 BN	100 BN	40 BN
Castrol	Cyltech 140	Cyltech 100	Cyltech 40 XDC
Chevron	Taro Ultra 140	Taro Ultra 100	Taro Ultra Advanced 40
ExxonMobil	Mobilgard 5145	Mobilgard 5100	Mobilgard 540 AC
Gulf Oil Marine	Gulfsea Cylcare 50140X	Gulfsea Cylcare 50100X	Gulfsea Cylcare XP 5040X
ENEOS Corporation		ENEOS Marine C1005S	
Shell	Shell Alexia 140	Shell Alexia 100	Shell Alexia 40XC
Sinopec Lubricant co.		Sinopec Marine Cylinder Oil 50100	
TotalEnergies Lubmarine	Talusia HR 140	Talusia Universal 100	Talusia HD 40

*Cat. II cylinder oils suitable for all Everllence B&W two-stroke engines and recommended for Mark 9 and higher. Examples of international cylinder oils for which an NOL has been granted Cat. II status by Everllence.

Table 9.01.01: Cat. II cylinder oils

2026-05-06 - en

Category I cylinder oils – Everllence B&W engines Mk. 8 and lower

Table 9.01.02 lists major international cylinder oil brands tested in service with acceptable results, and which have passed the testing procedure and obtained an NOL. Do not consider this list to be complete, as other Cat. I cylinder oils with NOLs from Everllence can be equally suitable.

Category I cylinder oils as stated in SL2022-728**			
Company	Cylinder oils		
	100BN - 140BN	70 BN	40 BN
Castrol		Cyltech 70	Cyltech 40SX* Cyltech 40
Chevron Lubricants		Taro Ultra 70	Taro Ultra 40
ExxonMobil		Mobilgard 570	Mobilgard 540 Mobilgard 540 X*
Gulf Oil Marine		Gulfsea Cylcare DCA 5070X	Gulfsea Cylcare DCA 5040X
ENEOS Corp.		Marine C705	Marine 405Z
Shell		Shell Alexia 70	Shell Alexia 40
Sinopec Lubricant co.	Sinopec Marine Cylinder Oil 50140	Sinopec Marine Cylinder OIl 5070S	Sinopec Marine Cylinder Oil 5040
SK lubricants	SK Supermar Cyl 140 / SK Supermar Cyl 100	SK Supermar Cyl 70 Plus	SK Supermar Cyl 40 Plus
TotalEnergies Lub-marine		Talusia HR 70	Talusia LS 40

* Also tested according to the new Cat. I requirements.

** Cat. I cylinder oils suitable for Everllence B&W two-stroke engines Mk. 8 and lower. Examples of international cylinder oils with an NOL from Everllence.

Table 9.01.02: Cat. I cylinder oils

Notwithstanding the foregoing, it remains the responsibility of the owner/operator of an engine to ensure that suitable fuels and lubes are conditioned and used in order to prevent damage to the engine and other equipment on board. Everllence disclaims any and all liability and cannot be held responsible for any damage to the engine, engine components or other equipment on board that may be caused by the use of the mentioned lubricants.

2026-05-06 - en

Description of cylinder oil systems

The general cylinder lubrication strategy for Everllence B&W engines is to match the cylinder oil with the fuel type, its sulphur content, and the dependency on detergent. This match can be achieved by the two cylinder oil lubricating systems available, both of which require access to two cylinder oils.

The two cylinder oil lubrication systems are – options 1 and 2:

- Option 1 - Automated cylinder oil switching system (ACOS2) is the standard system for most engines, whereas
- Option 2 - Automated cylinder oil mixing system (ACOM) is a more advanced system designed for engine operation, which places demands on the change of cylinder oil.

Engine type	ME-B/ME-C		
Fuel type	low sulphur (LS)	high sulphur (HS)	HS Tier II LS Tier III
Option 1 - ACOS2	standard	standard	standard
Option 2 - ACOM	N/A	option	option

Table 9.01.03: Lubrication systems for all engines

2026-05-06 - en

Option 1 – Automated cylinder oil switching system

ACOS2 is a simple system securing fully acceptable conditions when a longer changeover period is available. Fig. 9.01.01 shows Option 1 – the ACOS2 system.

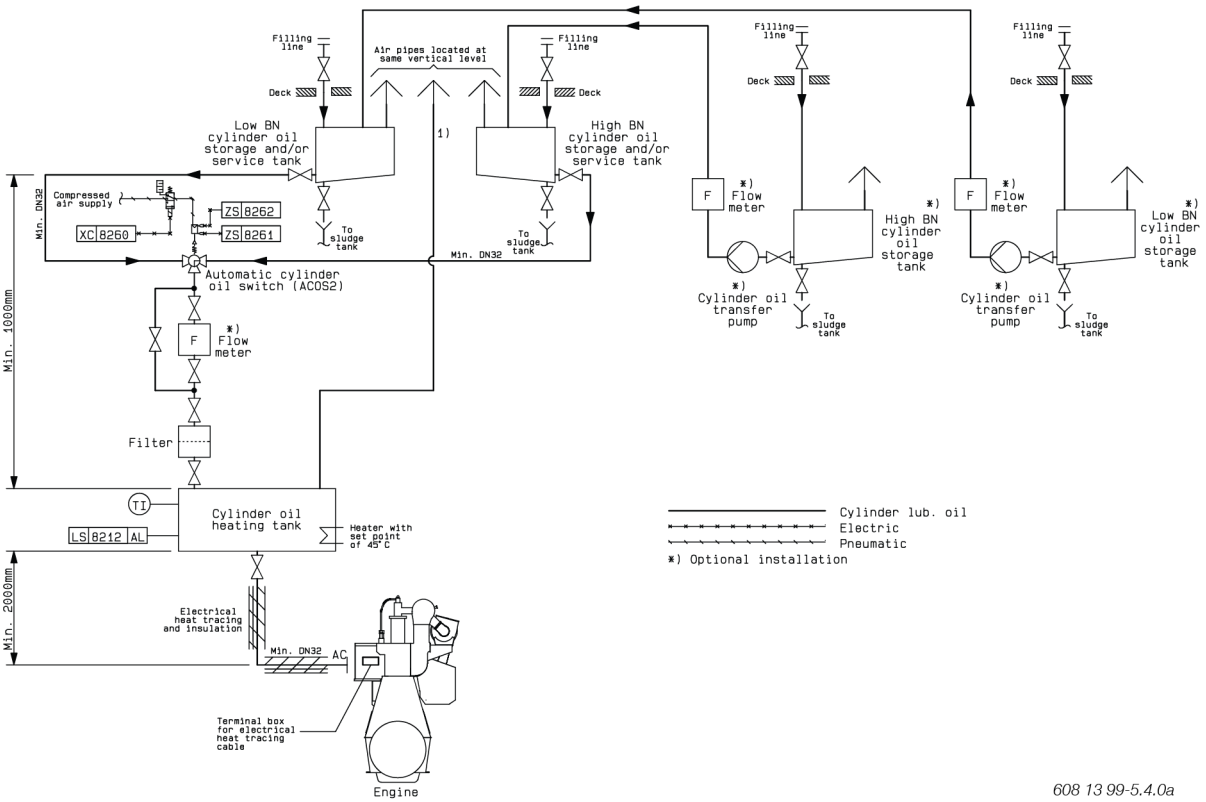

Fig. 9.01.01: Option 1 – ACOS2 system – standard system for most engines

Option 2 – Automated cylinder oil mixing system

ACOM is specified for engine operation and the need for a faster responding system when switching fuels. Fig. 9.01.02 shows Option 2 – the ACOM system.

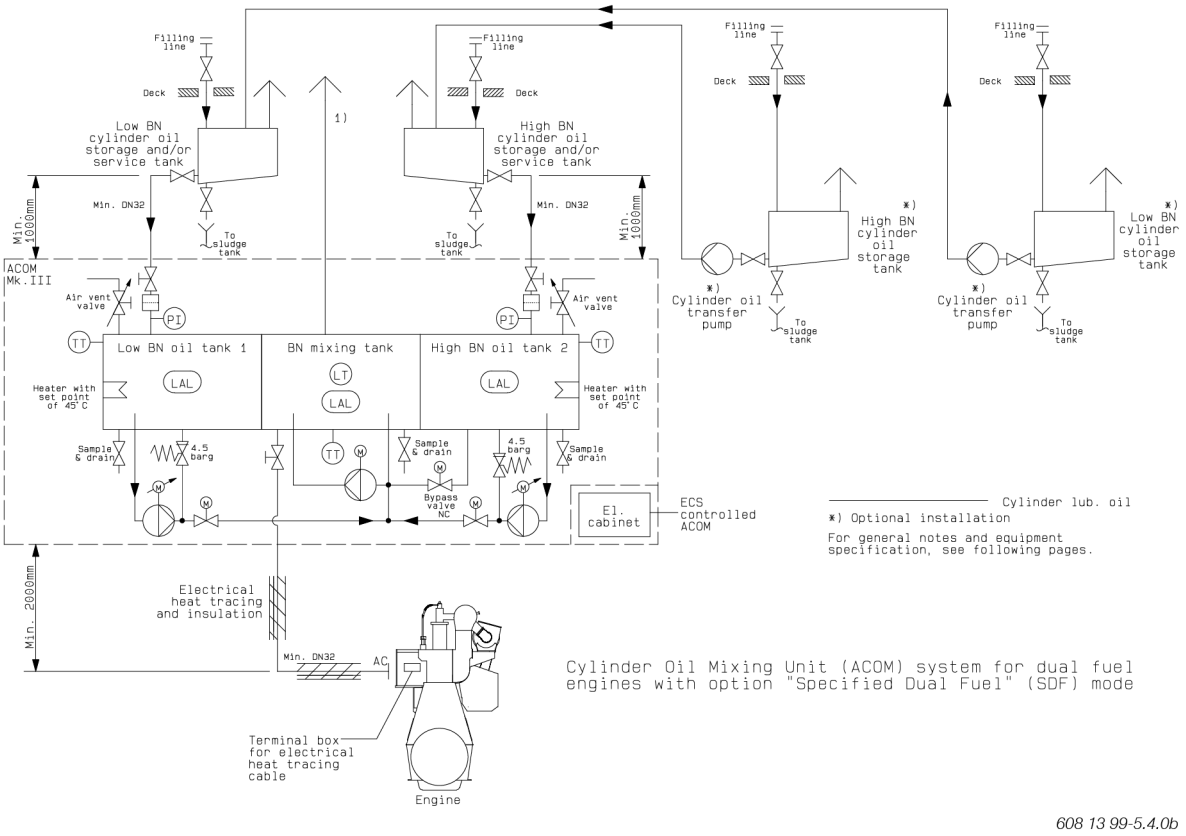

Fig. 9.01.02: Option 2 - ACOM system

Cylinder oil feed rate (dosage)

The minimum cylinder oil feed rate can be found in the latest official guideline issued in our most current Service Letter on this subject. Download Service Letters from our website here. The minimum feed rate is the amount of oil needed to lubricate all parts sufficiently.

Continuously monitoring the cylinder condition and analysing drain oil samples are important to:

1. optimise cylinder oil feed rate and consumption, and
2. safeguard the engine against wear.

Further information about cylinder lubrication is available in Everllence's most current Service Letters on this subject.

Option 1 – Automated cylinder oil switching system

The ACOS2 system automatically switches between two grades of cylinder oil, for example, cylinder lubricating oils with a high and a low BN. In general, the cylinder oil storage and/or service tanks should be arranged separately for the two cylinder oils.

Switching between the two types of cylinder lubricating oil is based on several factors, some are mentioned below:

- Engine load (fuel oil and dual-fuel (DF) operation)
- Amount of pilot fuel in the combusted fuel (only for DF operation on second fuel)
- Sulphur content in the pilot fuel (only for DF operation on second fuel)
- Cylinder oil detergency to control cylinder cleanliness.

The sulphur content in the combusted fuel is called the sulphur equivalent. The ACOS2 system automatically calculates the sulphur equivalent based on input about the sulphur content of the pilot fuel, which the crew enters on the main operating panel (MOP).

Control modes

The engine control system (ECS) controls the ACOS2 system and the supply of cylinder oils via a three-way valve.

See Fig. 9.01.01, and the control modes in Table 9.01.02.

Control mode	Description
Auto	Cylinder lubrication will switch to high-BN cylinder oil in dual-fuel operation, and low-BN cylinder oil when running on fuel oil only. This switch occurs automatically based on a feed rate threshold value.
High BN	Only high-BN oil is used for cylinder lubrication
Low BN	Only low-BN oil is used for cylinder lubrication

Table 9.01.02: Control modes

The three-way ball valve is activated pneumatically by control air and in failsafe position, a spring forces the valve to switch to the high-BN oil.

Timer control of High- and Low-BN control modes

A timer with two timer functions (Max. and Force) can be enabled to control how many days the engine will run on low-BN and high-BN oils.

The values entered into the timer and, therefore, the shift between cylinder oils, give the possibility to address cylinder cleanliness.

The “Max.” timer depends on the low-BN feed rate **or** the days entered in the timer.

If the low-BN feed rate is bigger than an engine-dependant threshold value, it will switch to high-BN oil. Likewise, if the number of days entered in the timer has elapsed, it will switch to high-BN oil. Only one of the criteria has to be fulfilled and the timer switches to high-BN oil.

The “Force” timer depends on the low-BN feed rate **and** the days entered in the timer.

If the low-BN feed rate is lower than an engine-dependant threshold value and the timer is done, it will switch to high-BN oil. Both criteria have to be fulfilled before the timer switches to high-BN oil.

2026-05-06 - en

Option 2 - Automated cylinder oil mixing system (ACOM)

The automated cylinder oil mixing (ACOM) is a cylinder oil delivery system which automatically mixes to two fully formulated cylinder oils to the optimum BN, depending on the sulphur content of the fuel.

In general, the cylinder oil storage and/or service tanks should be arranged separately for the two cylinder oils.

Everllence's ACOM system mixes commercially available cylinder oils to the BN value required. The resulting BN of the cylinder oil supplied to the liners is in the range of the BN values of the two cylinder oils stored on board.

The basic principle is to mix a cylinder lubricating oil with an optimal BN. At a certain sulphur content level, the engine has to run on a high-BN cylinder oil.

ACOM working principle

The ME-ECS controls the ACOM system and the mixing of cylinder oils based on an input about the sulphur content of the fuel combusted. In dual-fuel operation, the sulphur content of the fuel combusted depends on:

- engine load
- amount of pilot oil in the combusted fuel
- sulphur content in the pilot fuel.

The sulphur content of fuel is called the sulphur equivalent. The ACOM system automatically calculates the sulphur equivalent.

The ACOM system can be controlled automatically or manually, see Table 9.01.03.

Control mode	Description
Auto	The system automatically calculates the ordered BN value based on the sulphur percentage of the fuel oil.
Manual	The operator manually enters the ordered BN value

Table 9.01.03: Control modes

The engine control systems of ME-C/-GI/-LGI and ME-B-GI/-LGI engines contain the ACOM functionality, and the crew must input the sulphur content of the pilot fuel on the MOP.

On the ME-B engine, ACOM is a stand-alone installation controlled from an ACOM operating panel separate to the engine control system (ME-B ECS). The ship’s alarm system handles alarms.

The cylinder oil mixing volumes are kept small to enable a fast changeover from one cylinder oil BN to another.

Two-tank cylinder lubrication system with ACOM

The ACOM design enables measurement of the daily consumption of cylinder lubricating oil, which eliminates the need for two cylinder oil service/day tanks.

Furthermore, compared to Option 1 – the ACOS2 system in Fig. 9.01.01, the ACOM system also eliminates the need for a heating tank.

2026-05-06 - en

The cylinder lubricating oil is fed from the storage tanks to the ACOM system by gravity. The ACOM system is located in the engine room near to and above the cylinder lubricating oil inlet flange, AC, in a vertical distance of minimum 2 m. Fig. 9.01.04 shows the layout of the ACOM system.

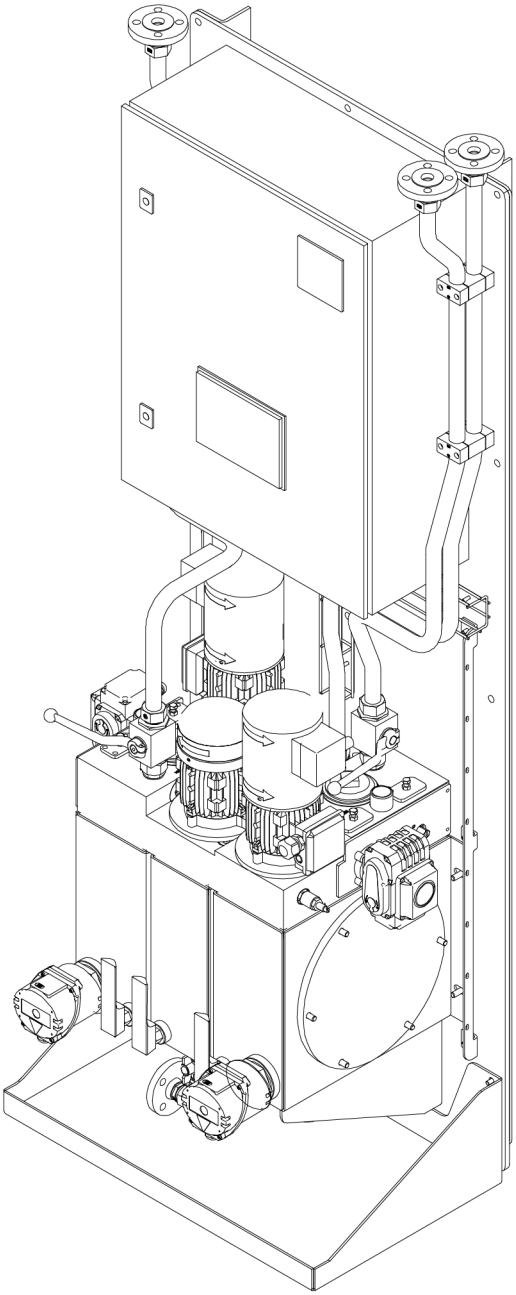

570 87 35-1.8.0c

Fig. 9.01.04: Automated cylinder oil mixing system (ACOM) in a single-rack version for installation in the engine room

2026-05-06 - en

Components for the cylinder oil lubricating systems

The next section describes the recommendations and requirements to the components of the cylinder lubricating oil systems.

1. Cylinder oil storage tanks and/or service tanks

a) Combined storage and service tank design

It is recommended that the tank design is tall and slim to optimise settling in the tank. The tank bottom must be sloped for easy water drainage.

b) Separate service tank design

It is recommended that the tank design is tall and slim to optimise settling in the tank and the accuracy of readings for calculating the consumption. The recommended length, width, and height aspect ratio is 1:1:3. The tank bottom must be sloped for easy water drainage.

Capacity

The tank capacities must be determined based on hourly cylinder oil consumption and the needed operating storage time. The storage time will differ from project to project according to the time between bunkering of cylinder oil estimated by the vessel operator. If separate cylinder oil storage tanks are installed, Everllence normally recommends that the capacity for the service tanks is defined as one day.

Hourly consumption [m^3/h] =
Feed rate [g/kWh] x $Power_{SMCR}$ [kW] x f_{safe}/(1000 [g/kg] x Density [kg/m^3])

- Feed rate [g/kWh] = ACC x S [%], the feed rate used must not be less than 0.6 g/kWh.
- ACC [g/kWh] = 0.4, as the design (normally between 0.2–0.4)
- S [%] is the sulphur content of the fuel oil
- $Power_{SMCR}$ [kW] is engine power at SMCR
- f_{safe} is a safety factor, f_{safe} = 1.2
- Density [kg/m^3] = 900.

Location

The supply line must be located minimum 1000 mm above the top of the cylinder oil heating tanks and the ACOM system.

Minimum cylinder oil temperature in the tank

The design minimum cylinder oil temperature in the tank is 25°C.

If the holding temperature is lower, the size of the heating element in the heating tank and the pipe dimension from the service tank to the heating tank must be increased.

Outlet pipe dimension

Min. DN32 (min. DN40 if 0°C is the minimum cylinder oil temperature design criteria)

2026-05-06 - en

2. Filter

Fineness (absolute): 250 µm

3. Cylinder oil heating tanks and ACOM tanks

Capacity: Approx. 40 litres

Location

The bottom of the heating tank must be minimum 2000 mm above the engine connection 'AC'.

Heating element size

Can be calculated as: Heat [W] = $Power_{SMCR}$ [kW] x f_{heat} [W/kW]

- $Power_{SMCR}$ [kW] is engine power at SMCR
- f_{heat25} [W/kW] = 0.0078 for low-sulphur (0.5% S) engines (based on service tank holding temperature, T_h = 25°C)
- f_{heat25} [W/kW] = 0.0183 for high-sulphur (3.5% S) engines (based on service tank holding temperature, T_h = 25°C)

If a lower holding temperature is considered, f_{heat} must be:

$f_{heat} = (45-T_{h\,act}) \times f_{heat25}/20$

Where $T_{h\,act}$ [°C] is the actual service tank holding temperature.

- Inlet pipe dimension: Min. DN32 (min. DN40, if 0°C service tank holding temperature is the design criteria)
- Outlet pipe dimension: Min. DN32
- Vent pipe dimension: Min. DN32
- Level alarm low switch: Guidance values for automation (GVA) tag no. LS 8212 AL

4. Electrical heat tracing and insulation

Location

The entire pipeline from heating tank to engine must be fitted with insulation and electrical heat tracing.

Electrical tracing cable connection

The electrical tracing cable (shipyard supply) must be connected to the terminal box installed internally at the engine. Fig. 9.01.05 shows the arrangement.

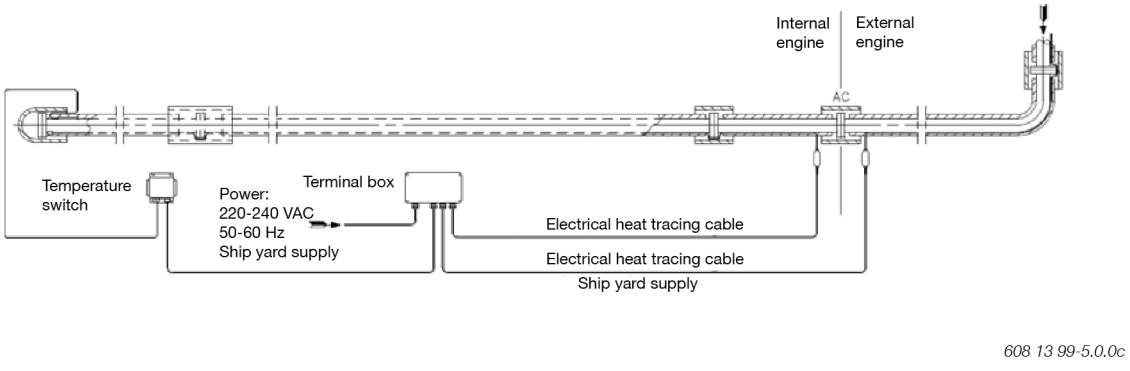

Fig 9.01.05: Electrical tracing cable arrangement

2026-05-06 - en

5. Automatic cylinder oil switch – ACOS2

- Type: three-way ball valve (L-bored)
- Actuator: Pneumatic single acting type with spring return to position “High BN cylinder oil”
- Solenoid valve: 3/2 type with silencer
- Controlled by: Engine control system – control signal XC8260 (24 V DC), closed contact = “Low BN cylinder oil”
- Valve position feed-back to: engine control system - feed-back signal ZS8261 (potential free contact) - “Low BN cylinder oil”
- Engine control system - feed-back signal ZS8262 (potential free contact) - “High BN cylinder oil”
- Valve location: Must be located as close as possible to the heating tank.

6. Cylinder oil storage tanks (Optional)

Purpose

If for some reason, for example owner requirement, or if it is not possible to locate the needed storage capacity in the service tanks at the required vertical elevation level, independent storage tanks can be used.

Tank design

It is recommended that the tank design is tall and slim to optimise settling in the tank. The tank bottom must be sloped for easy water drainage.

Capacity

The capacities of the tanks must be determined based on hourly cylinder oil consumption and the needed operating storage time. The needed storage time will differ from project to project according to the time between bunkering of cylinder oil estimated by the vessel operator.

For calculating hourly consumption [m^3/h], reference is made to section “Cylinder oil storage tanks and/or service tanks” – “Capacity”.

7. Cylinder oil transfer pumps (Optional)

Purpose

To transfer the cylinder oil between storage tanks and service tanks.

Option

If one transfer pump is used for pumping both cylinder oils, it has to be secured that the pump suction/discharge valves are interlocked with each other to avoid unintended blending of the two cylinder oils with different BN values.

8. Flowmeter (Optional)

Location

Installation options:

- Located between service tank and cylinder oil heating tank *)
- Located between cylinder oil heating tank and engine. Only a Coriolis type can be used *)
- Located between storage tanks and service tanks.

*) These flowmeter locations can result in unreliable measurements because of the very low flow.

2026-05-06 - en

Type

A mass flowmeter of the Coriolis type can be recommended based on: low differential pressure, no built-in non-return function, and it provides mass flow results (not a volumetric result).

Vent pipes for twin engine plants (Note 1):

- ACOS2 system: A separate vent pipe must be used from each engine heating tank
- ACOM system: A separate vent pipe must be used from each engine ACOM BN mixing tank.

2026-05-06 - en

This page is intentionally left blank

2026-05-06 - en

Alpha ACC cylinder lubrication system

The Everllence B&W Alpha cylinder lubrication system, see Figs. 9.02.02a, 02b and 02c, is designed to supply cylinder oil intermittently, for instance every 2, 4 or 8 engine revolutions with electronically controlled timing and dosage at a defined position.

Traditional two-tank cylinder lubrication system

Separate storage and service tanks are installed for each of the cylinder oils with different BNs used onboard ships operating on both high- and low-sulphur fuels, see Fig. 9.02.01.

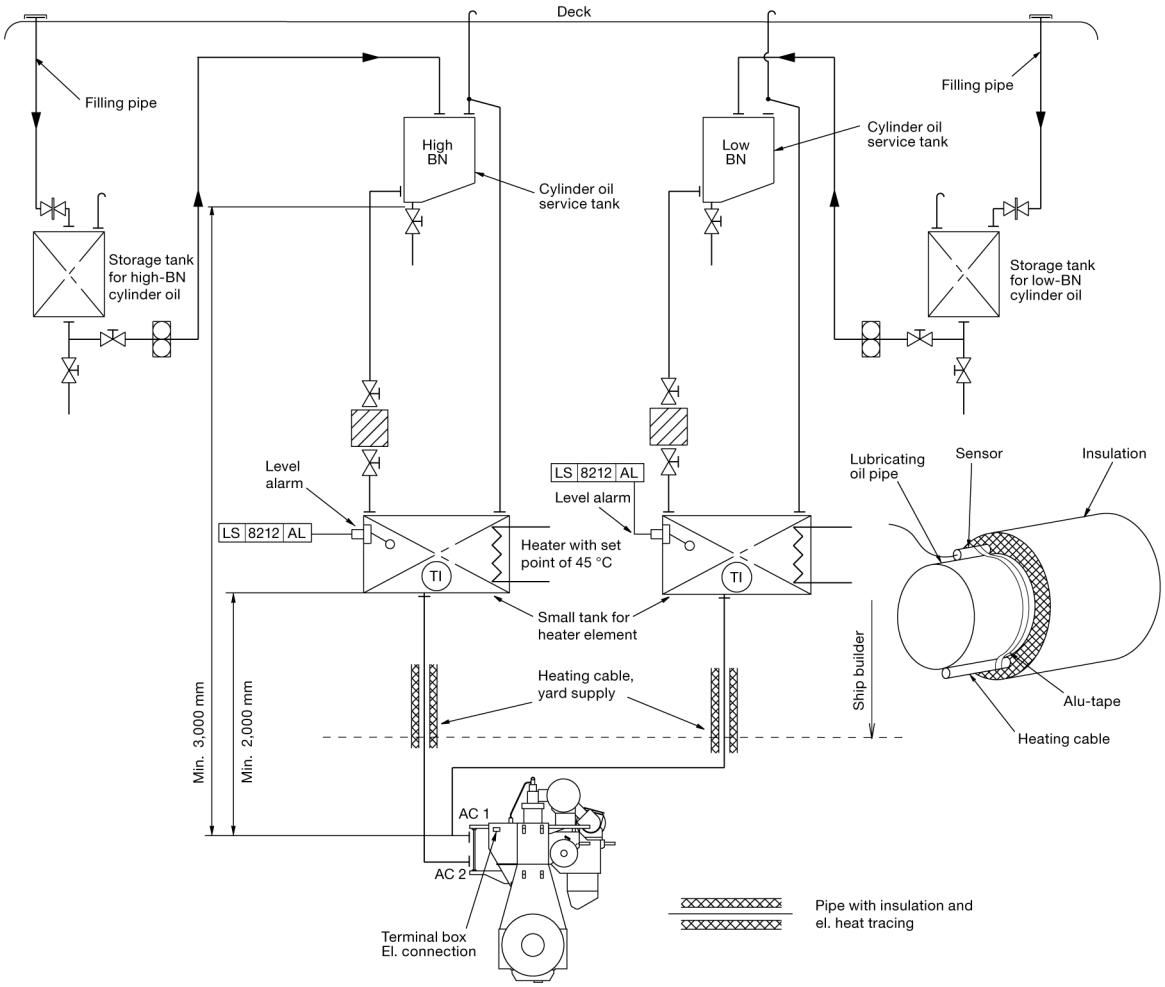

Fig. 9.02.01: Cylinder lubricating oil system with dual storage and service tanks and ACOS2 (behind AC1 and AC2)

The cylinder lubricating oil is pumped from the cylinder oil storage tank to the service tank. The size of the service tank depends on the owner's and the yard's requirements, it is normally dimensioned for about one week's cylinder lubricating oil consumption.

2026-01-09 - en

Oil feed to the Alpha cylinder lubrication system

Cylinder lubricating oil is fed to the Alpha cylinder lubrication system by gravity from the service tank or ACOM.

The oil fed to the injectors is pressurised by the Alpha Lubricator which is placed on the hydraulic cylinder unit (HCU) and equipped with small multi-piston pumps.

The oil pipes fitted on the engine are shown in Fig. 9.02.04.

The whole system is controlled by the Cylinder Control Unit (CCU) which controls the injection frequency based on the engine-speed signal given by the tacho signal and the fuel index.

Prior to start-up, the cylinders can be pre-lubricated and, during the running-in period, the operator can choose to increase the lubricating oil feed rate to a max. setting of 200%.

The Everllence B&W Alpha Cylinder Lubricator is preferably to be controlled in accordance with the Alpha ACC (Adaptable Cylinder Oil Control) feed rate system.

The yard supply should be according to the items shown in Fig. 9.02.02a within the broken line.

Regarding the filter and the small tank for heater, please see Fig. 9.02.05.

Alpha Lubricator variants

Since the Alpha Lubricator on ME and ME-B engines are controlled by the engine control system, it is also referred to as the ME lubricator on those engines.

A more advanced version with improved injection flexibility, the Alpha Lubricator Mk 2, is being introduced on the G95/50/45/40ME-C9 and S50MEC9 including their GI dual fuel variants.

Further information about the Alpha Lubricator Mk 2 is available in our publication:

Service Experience Everllence B&W Two-stroke Engines

The publication is available at www.everllence.com → 'Marine' → 'Products' → 'Planning Tools and Downloads' → 'Technical Papers'.

Alpha adaptive cylinder oil control (Alpha ACC)

It is a well-known fact that the actual need for cylinder oil quantity varies with the operational conditions such as load and fuel oil quality. Consequently, in order to perform the optimal lubrication – cost'effectively as well as technically – the cylinder lubricating oil dosage should follow such operational variations accordingly.

The Alpha lubricating system offers the possibility of saving a considerable amount of cylinder lubricating oil per year and, at the same time, to obtain a safer and more predictable cylinder condition.

Alpha ACC (Adaptive Cylinder-oil Control) is the lubrication mode for Everllence B&W two-stroke engines, i.e. lube oil dosing proportional to the engine load and proportional to the sulphur content in the fuel oil being burnt.

2026-01-09 - en

Working principle

The feed rate control should be adjusted in relation to the actual fuel quality and amount being burnt at any given time.

The following criteria determine the control:

- The cylinder oil dosage shall be proportional to the sulphur percentage in the fuel
- The cylinder oil dosage shall be proportional to the engine load (i.e. the amount of fuel entering the cylinders)
- The actual feed rate is dependent of the operating pattern and determined based on engine wear, cylinder condition and BN of the cylinder oil.

The implementation of the above criteria will lead to an optimal cylinder oil dosage.

Specific minimum dosage with Alpha ACC

The recommendations are valid for all plants, whether controllable pitch or fixed pitch propellers are used. The specific minimum dosage at lowersulphur fuels is set at 0.6 g/kWh.

After a running-in period of 500 hours, the feed rate sulphur proportional factor is 0.20 - 0.40 g/kWh × S%. The actual ACC factor will be based on cylinder condition, and preferably a cylinder oil feed rate sweep test should be applied. The ACC factor is also referred to as the Feed Rate Factor (FRF).

Examples of average cylinder oil consumption based on calculations of the average worldwide sulphur content used on Everllence B&W two-stroke engines are shown in Fig. 9.02.01a and b.

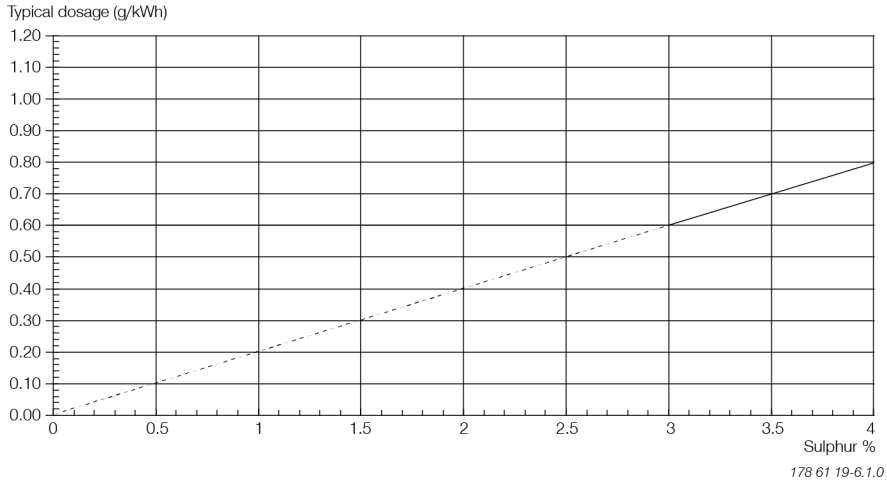

Fig. 9.02.01a: FRF = 0.20 g/kWh × S% and BN 100 cylinder oil – average consumption less than 0.65 g/kWh

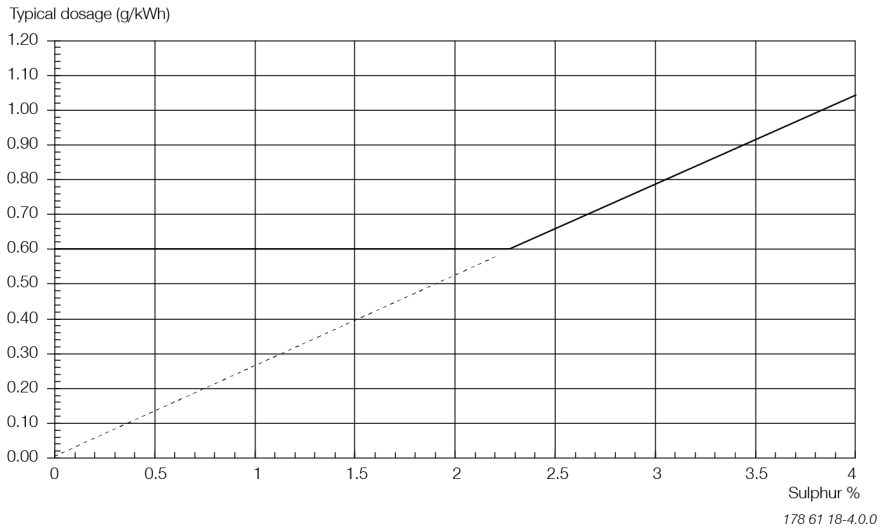

Fig. 9.02.01b: FRF = 0.26 g/kWh × S% and BN 100 cylinder oil – average consumption less than 0.7 g/kWh

Further information about cylinder oil dosage is available in Everllence's most current Service Letters on this subject available at www.everllence.com --> 'Two-Stroke' --> 'Service Letters'.

Cylinder oil pipe heating

In case of low engine room temperature, it can be difficult to keep the cylinder oil temperature at 45°C at the Everllence B&W Alpha Lubricator, mounted on the hydraulic cylinder.

Therefore the cylinder oil pipe from the small tank for heater element in the vessel, Fig. 9.02.02a, or from the ACOM, Fig. 9.02.02b, and the main cylinder oil pipe on the engine is insulated and electricallly heated.

The engine builder is to make the insulation and heating of the main cylinder oil pipe on the engine. Moreover, the engine builder is to mount the terminal box and the thermostat on the engine, see Fig. 9.02.03.

The ship yard is to make the insulation of the cylinder oil pipe in the engine room. The heating cable is to be mounted from the small tank for heater element or the ACOM to the terminal box on the engine, see Figs. 9.02.02a and 02b.

2026-01-09 - en

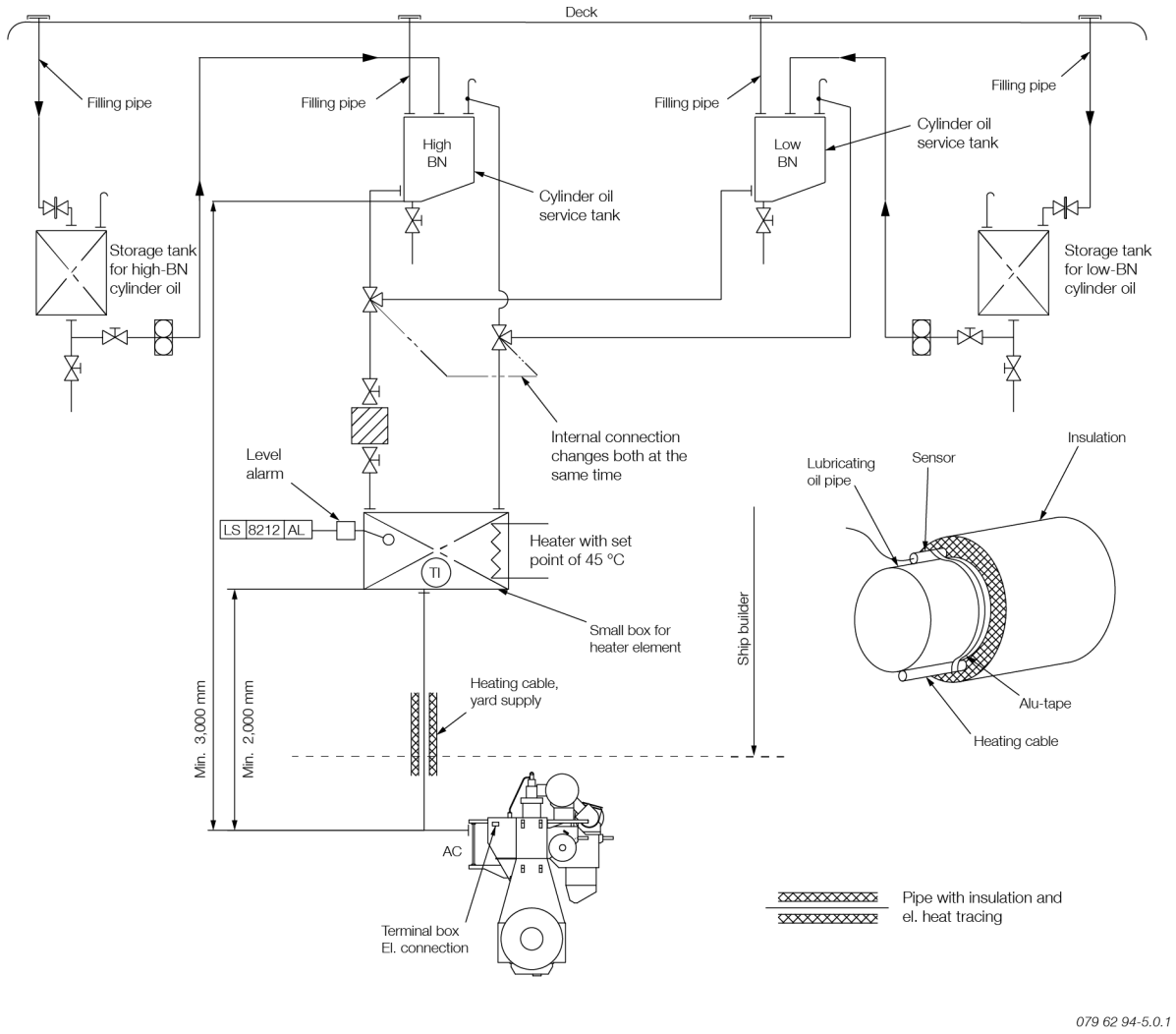

Fig. 9.02.02a: Cylinder lubricating oil system with dual storage and service tanks

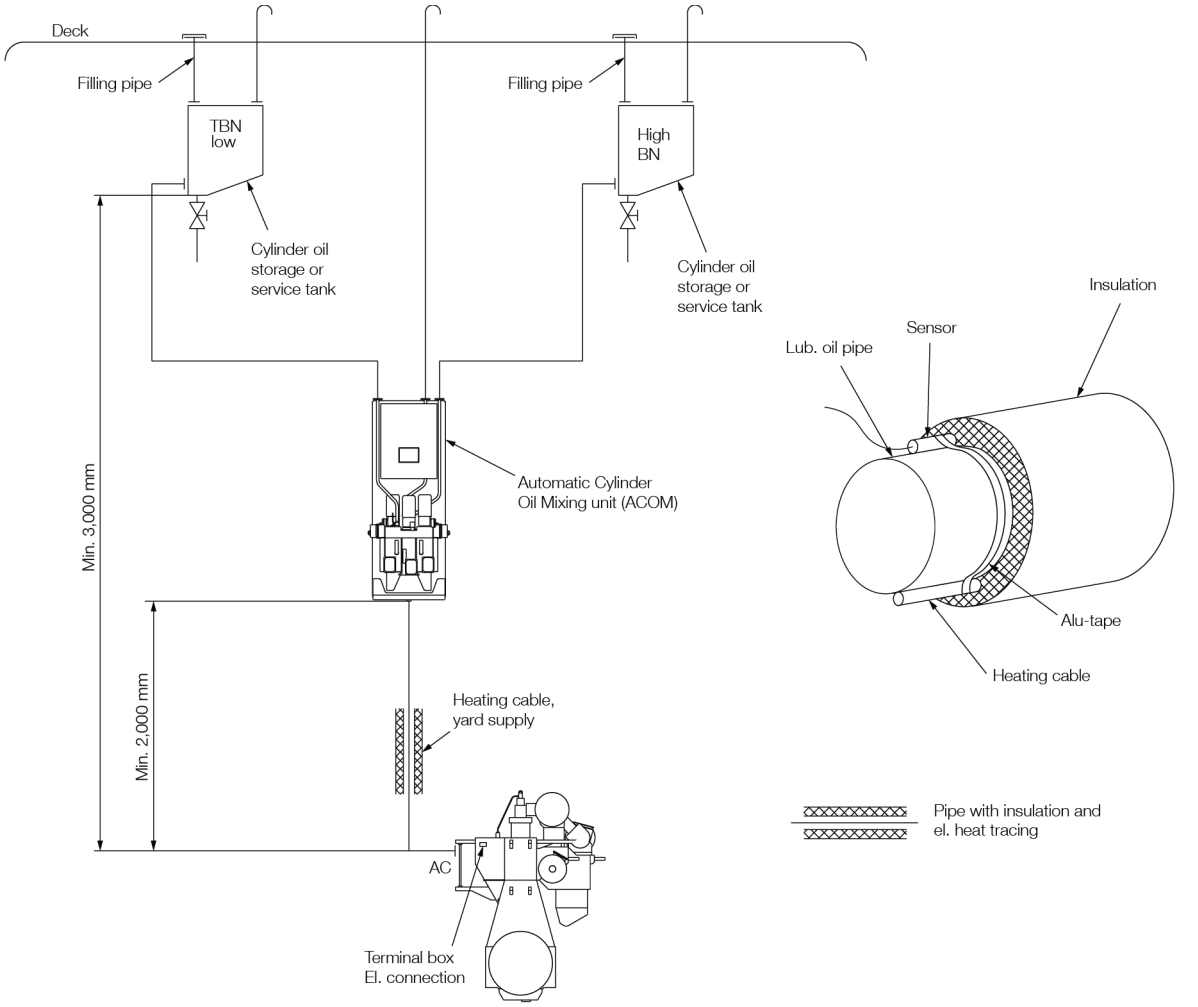

079 08 33-0.0.1

Fig. 9.02.02b: Cylinder lubricating oil system with dual storage or service tanks and ACOM

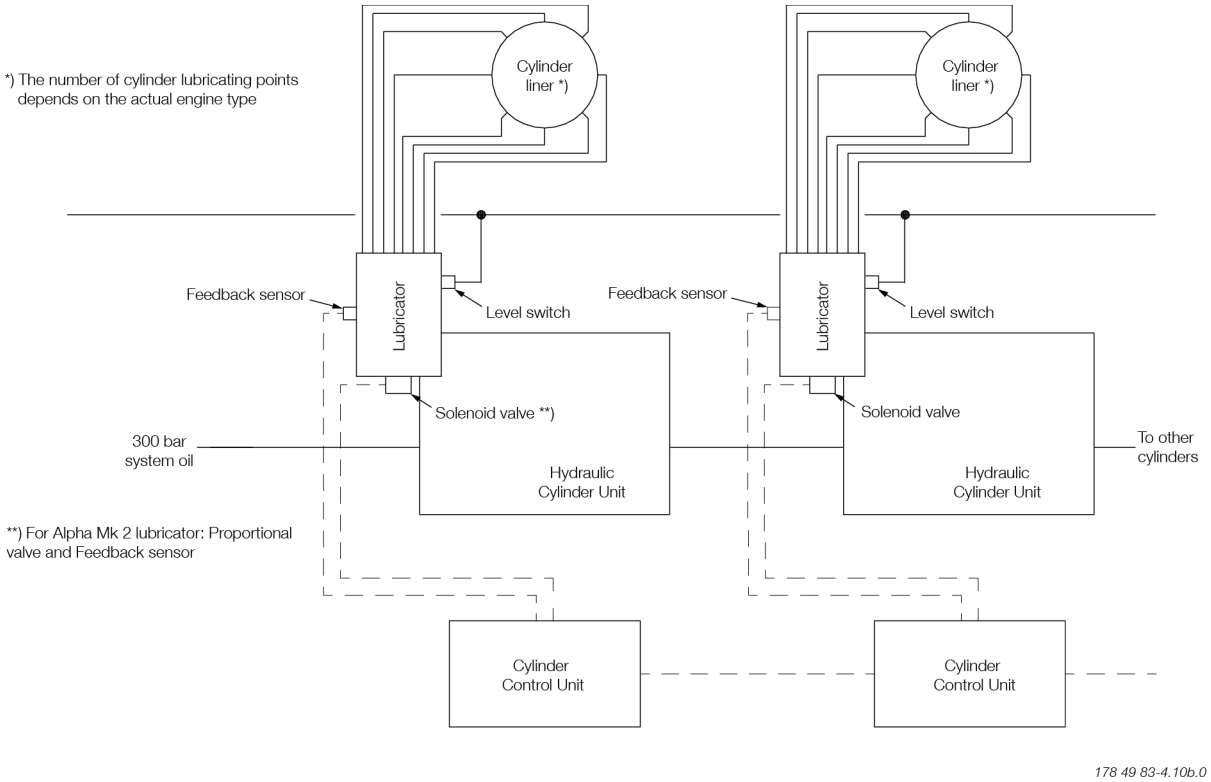

Fig. 9.02.02c: Cylinder lubricating oil system. Example from 80/70/65ME-C/-GI/-LGI engines

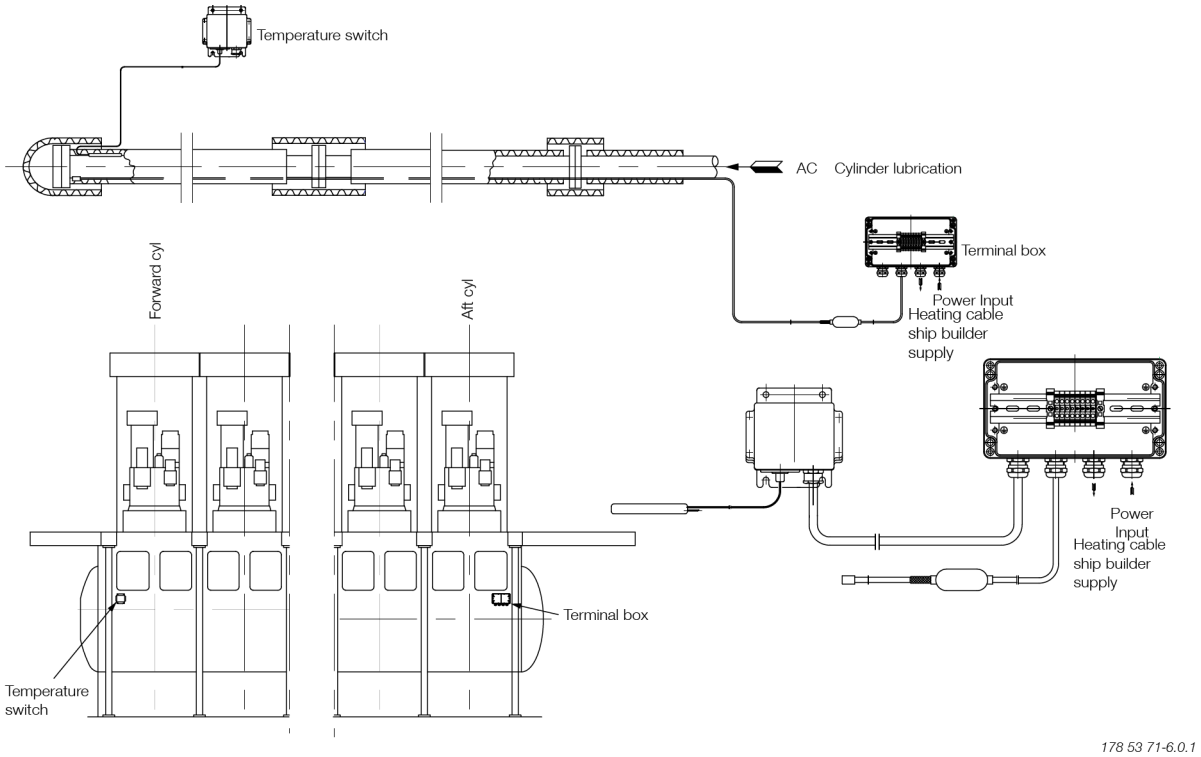

Fig. 9.02.03: Electric heating of cylinder oil pipes

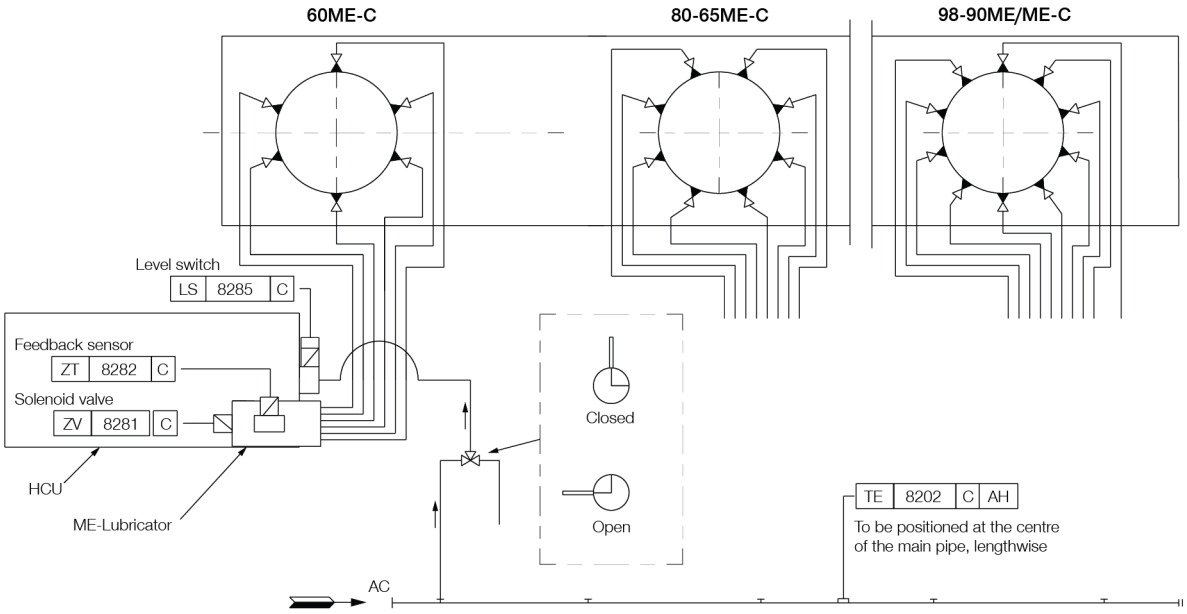

561 67 56-8.1.0

The item no. refer to 'Guidance Values Automation'. The letters refer to list of 'Counterflanges'

Fig. 9.02.04a: Cylinder lubricating oil pipes, Alpha/ME lubricator

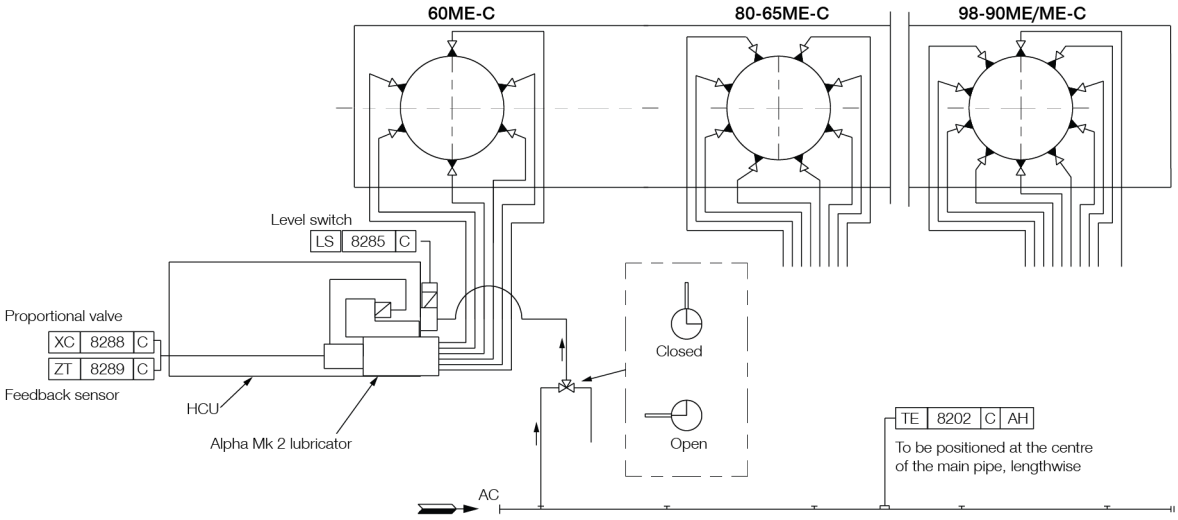

561 70 02-5.2.0

The item no. refer to 'Guidance Values Automation'. The letters refer to list of 'Counterflanges'

Fig. 9.02.04b: Cylinder lubricating oil pipes, Alpha Mk 2 lubricator

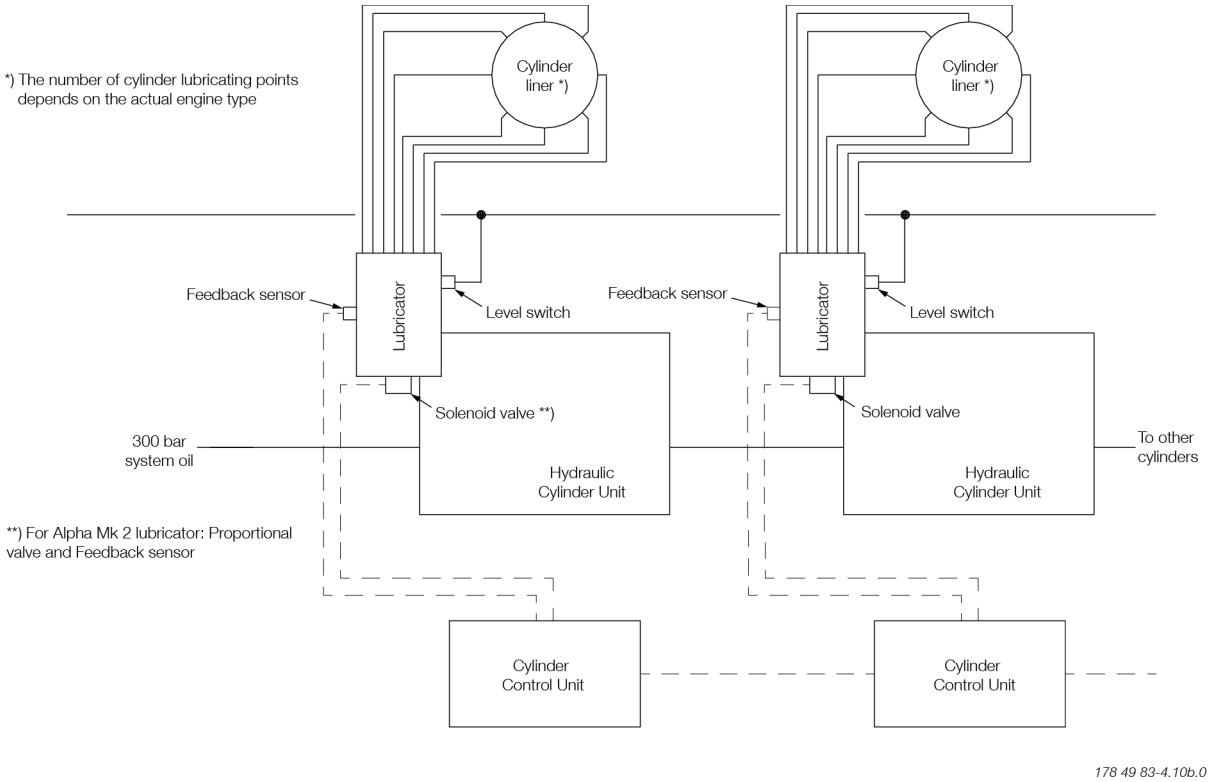

Fig. 9.02.02c: Cylinder lubricating oil system. Example from 80/70/65ME-C/-GI/-LGI engines

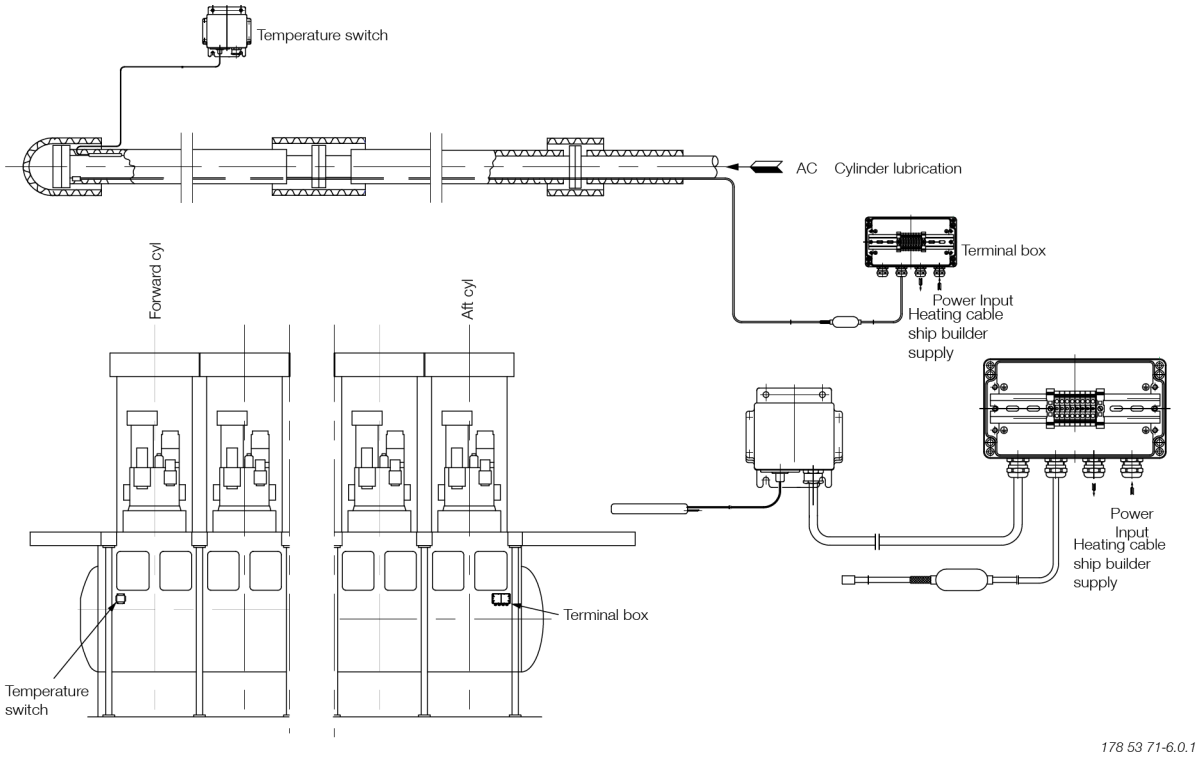

Fig. 9.02.03: Electric heating of cylinder oil pipes

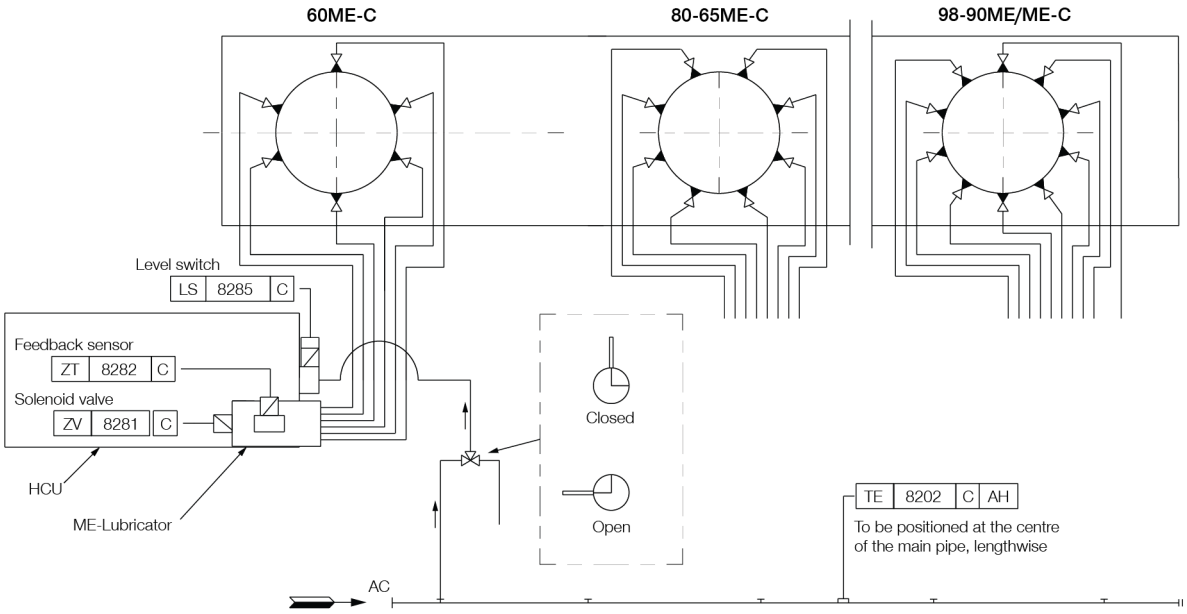

561 67 56-8.1.0

The item no. refer to 'Guidance Values Automation'. The letters refer to list of 'Counterflanges'

Fig. 9.02.04a: Cylinder lubricating oil pipes, Alpha/ME lubricator

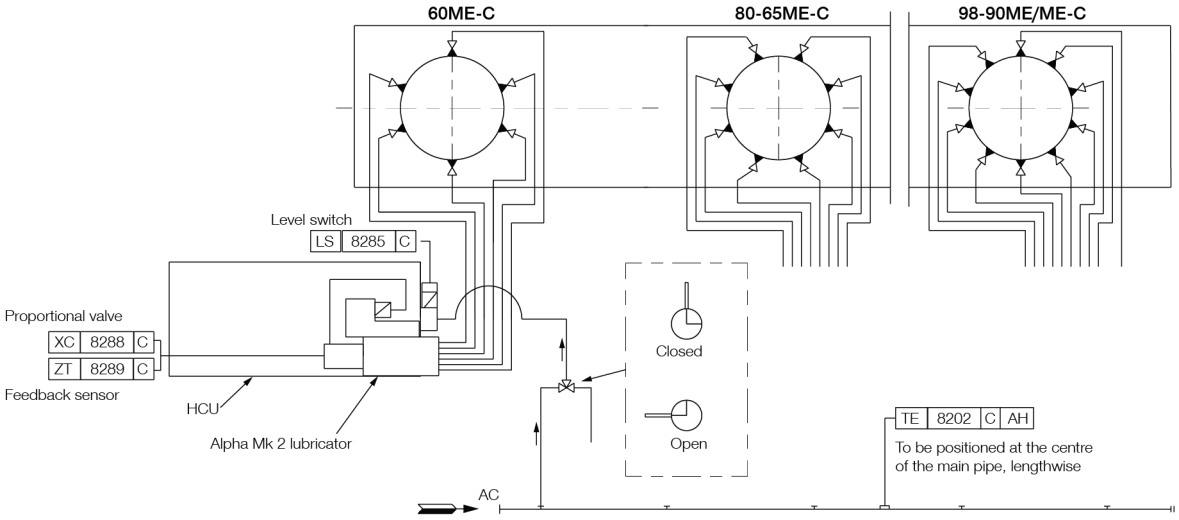

561 70 02-5.2.0

The item no. refer to 'Guidance Values Automation'. The letters refer to list of 'Counterflanges'

Fig. 9.02.04b: Cylinder lubricating oil pipes, Alpha Mk 2 lubricator

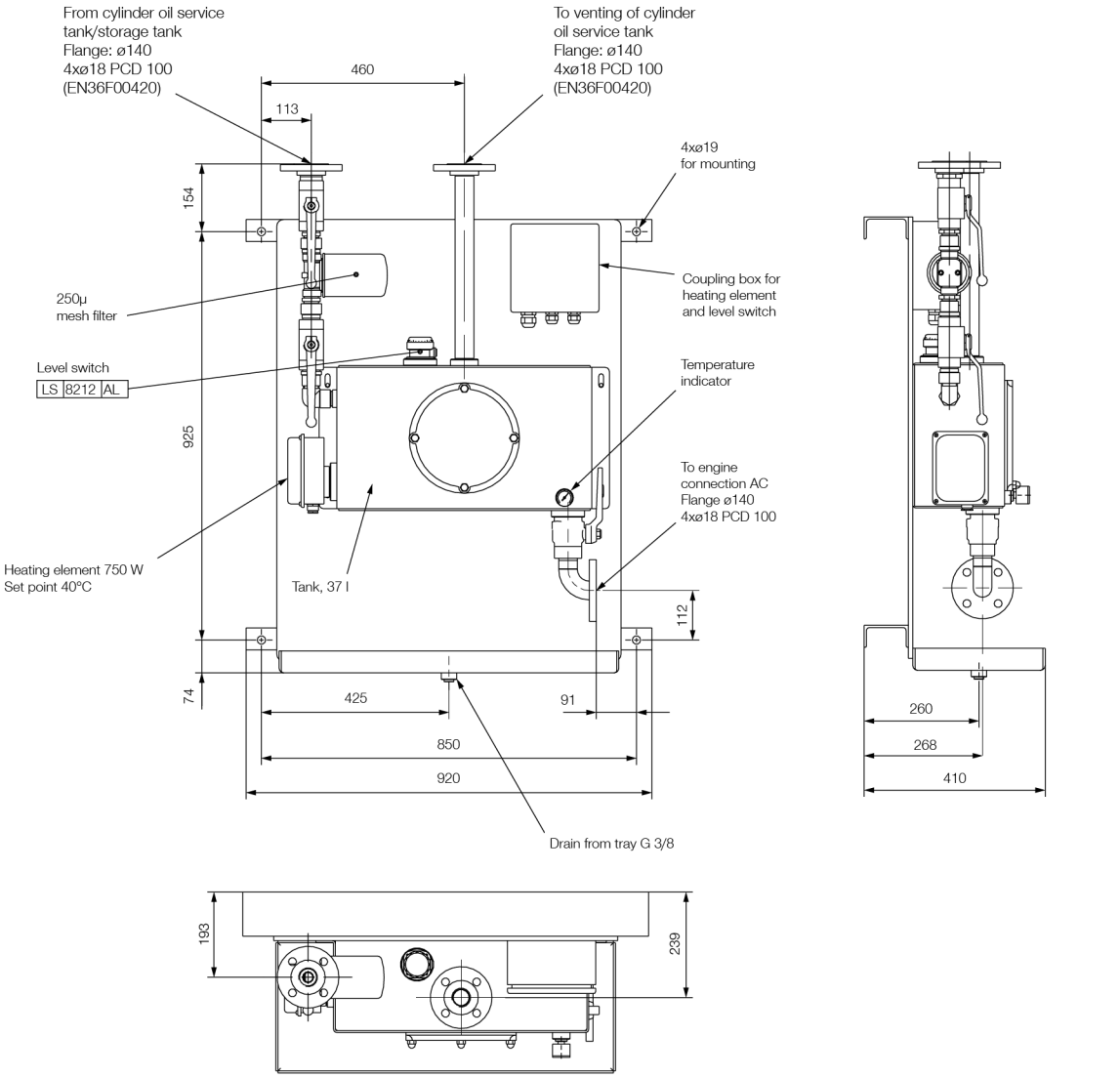

Fig. 9.02.05: Suggestion for small heating tank with filter (for engines without ACOM)

This page is intentionally left blank

2026-01-09 - en

01 Engine Design
02 Engine Layout and Load Diagrams, SFOC, dot 5
03 Turbocharger Selection & Exhaust Gas Bypass
04 Electricity Production
05 Installation Aspects
06 List of Capacities: Pumps, Coolers & Exhaust Gas
07 Fuel
08 Lubricating Oil
09 Cylinder Lubrication
10 Piston Rod Stuffing Box Drain Oil
11 Low-temperature Cooling Water
12 High-temperature Cooling Water
13 Starting and Control Air
14 Scavenge Air
15 Exhaust Gas
16 Engine Control System
17 Vibration Aspects
18 Monitoring Systems and Instrumentation
19 Dispatch Pattern, Testing, Spares and Tools
20 Project Support and Documentation
21 Appendix

This page is intentionally left blank

Stuffing box drain oil system

For engines running on heavy fuel, it is important that the oil drained from the piston rod stuffing boxes is not led directly into the system oil, as the oil drained from the stuffing box is mixed with sludge from the scavenge air space.

The performance of the piston rod stuffing box on the engines has proved to be very efficient, primarily because the hardened piston rod allows a higher scraper ring pressure.

The amount of drain oil from the stuffing boxes is typically about 10 - 15 litres/ 24 hours per cylinder during normal service. In the running-in period, it can be higher. The drain oil is a mixture of system oil from the crankcase, used cylinder oil, combustion residues and water from humidity in the scavenge air.

The relatively small amount of drain oil is led to the general oily waste drain tank or is burnt in the incinerator, Fig. 10.01.01. (Yard's supply).

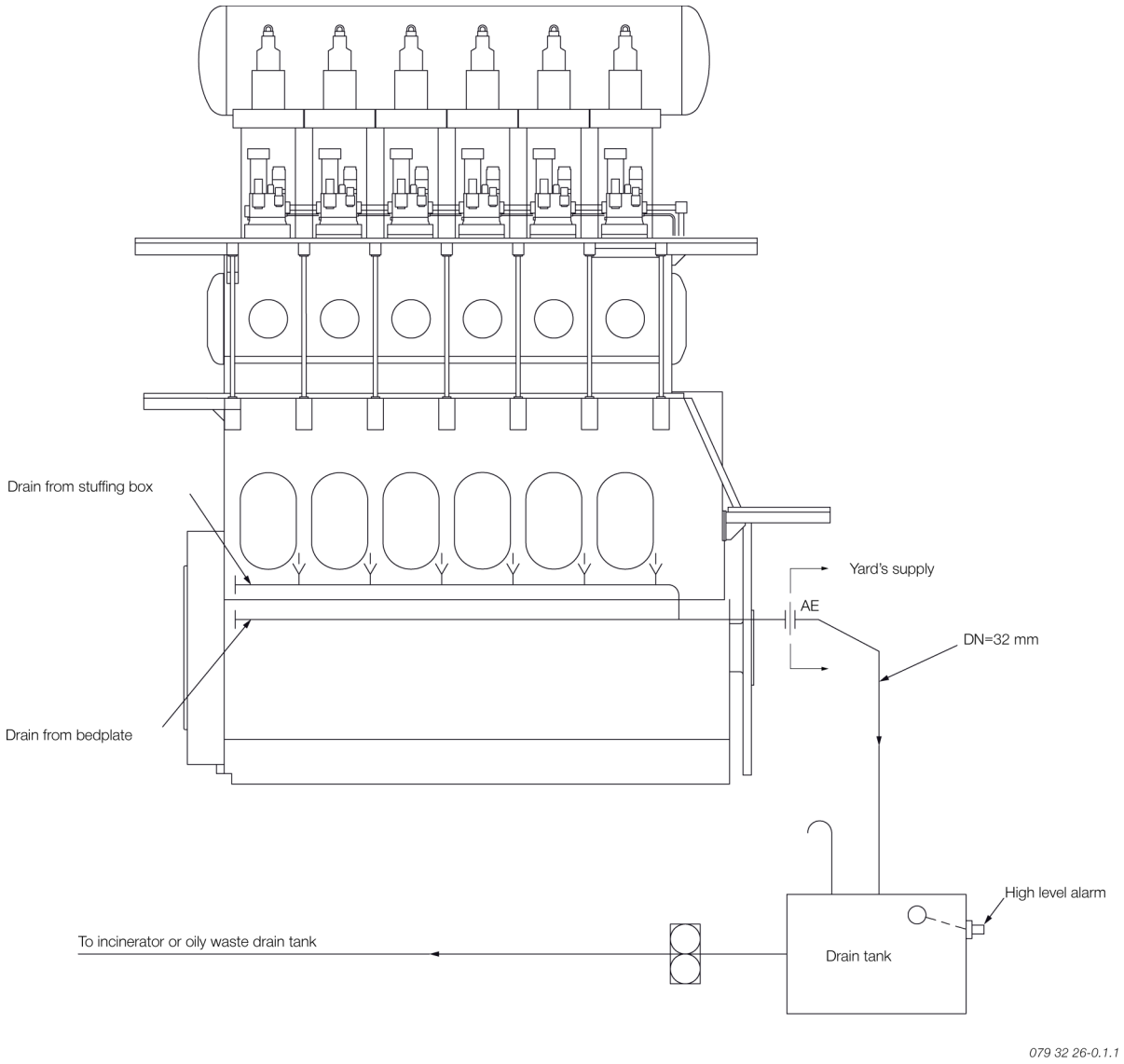

Fig. 10.01.01: Stuffing box drain oil system

2025-03-24 - en

This page is intentionally left blank

2025-03-24 - en

01 Engine Design
02 Engine Layout and Load Diagrams, SFOC, dot 5
03 Turbocharger Selection & Exhaust Gas Bypass
04 Electricity Production
05 Installation Aspects
06 List of Capacities: Pumps, Coolers & Exhaust Gas
07 Fuel
08 Lubricating Oil
09 Cylinder Lubrication
10 Piston Rod Stuffing Box Drain Oil
11 Low-temperature Cooling Water
12 High-temperature Cooling Water
13 Starting and Control Air
14 Scavenge Air
15 Exhaust Gas
16 Engine Control System
17 Vibration Aspects
18 Monitoring Systems and Instrumentation
19 Dispatch Pattern, Testing, Spares and Tools
20 Project Support and Documentation
21 Appendix

This page is intentionally left blank

Low-temperature cooling water system

The low-temperature (LT) cooling water system supplies cooling water for the lubricating oil, jacket water and scavenge air coolers.

The LT cooling water system can be arranged in the following configurations:

- Central cooling water system – the most common choice and the basic execution for Everllence B&W engines
- Seawater cooling system – the most simple system, which is available as an option
- Combined cooling water system with a seawater cooled scavenge air cooler, but a freshwater cooled jacket water and lubricating oil cooler, which is available as an option.

Figs. 11.01.01, 11.01.02, and 11.01.03 show principle diagrams of the three LT cooling water systems, and descriptions are found later in this chapter.

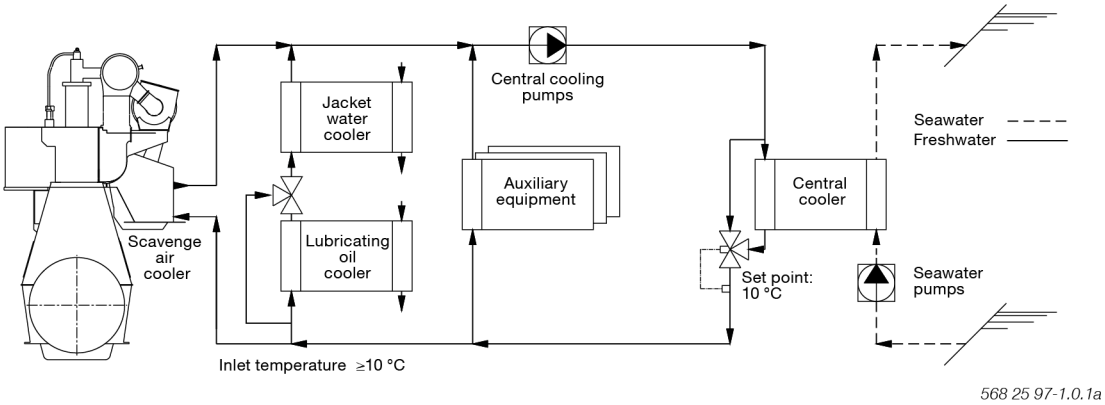

Fig. 11.01.01: Principle diagram of central cooling water system

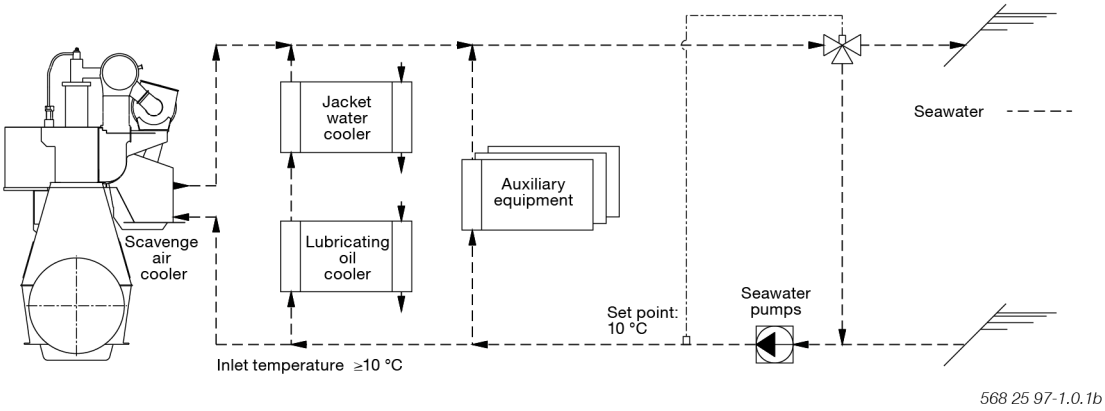

Fig. 11.01.02: Principle diagram of seawater cooling system

2025-06-17 - en

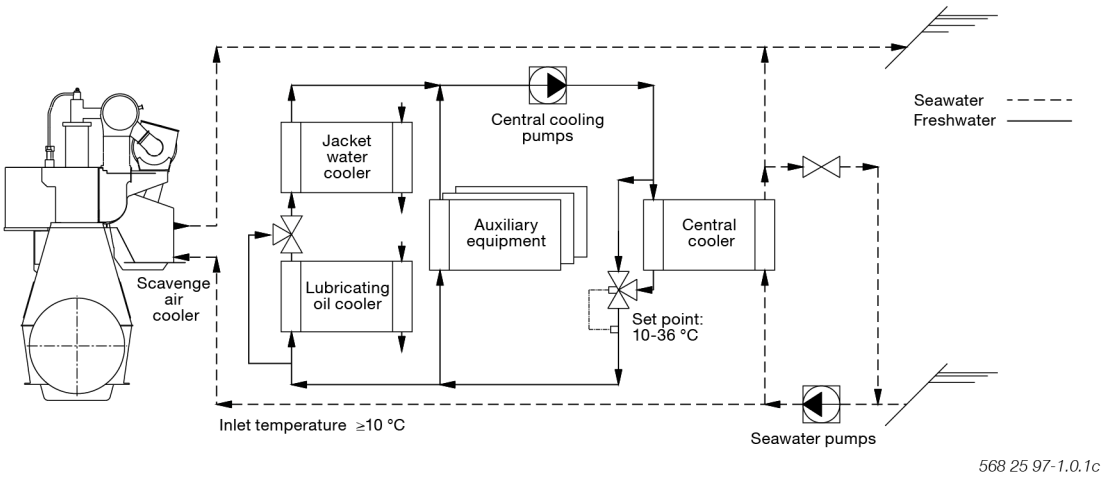

Fig. 11.01.03: Principle diagram of combined cooling water system

Everllence's Service Letters provide further information and the latest recommendations concerning cooling water systems. Service Letters are available at https://www.everllence.com/services/industries/marine/service-letters

Inhibition of chemical corrosion

Various types of inhibitors are available but, generally, only nitrite-borate based inhibitors are recommended.

Where the inhibitor maker specifies a certain concentration range as the normal concentration, Everllence recommends maintaining the actual concentration in the upper end of that range.

Everllence also recommends keeping a record of all tests to be able to monitor the condition and chemical properties of the cooling water, and how these develop. It is recommended to record the quality of water as follows

Once a week

- Take a sample from the circulating cooling water during running, however, not from the expansion tank nor the pipes leading to the tank. Check the condition of the cooling water. Test kits with instructions are normally available from the inhibitor supplier.
- Check the condition of the cooling water
- Test kits with instructions are normally available from the inhibitor supplier.

Every third month

- Take a water sample from the system during running, as described in ‘Once a week’
- Send the sample for laboratory analysis.

Once a year

- Empty, flush, and refill the cooling water system
- Add the inhibitor.

For further information, refer to our recommendations for treatment of the jacket water/freshwater. The recommendations are available from Everllence, Copenhagen.

2025-06-17 - en

Cooling water system for main engines with exhaust gas recirculation

For main engines with exhaust gas recirculation (EGR), a central cooling water system using freshwater as the cooling medium will be specified.

Further information about cooling water systems for main engines with EGR is available from Everllence, Copenhagen.

2025-06-17 - en

This page is intentionally left blank

2025-06-17 - en

Central cooling water system

The central cooling water system is characterised by having only one seawater cooled heat exchanger. The other coolers, including the jacket water cooler, are cooled with the central cooling water.

Cooling water temperature

To optimise the fuel oil consumption and cylinder condition of the engine, it is important to ensure the lowest possible cooling water inlet temperature at the scavenge air cooler.

Therefore, Everllence recommends, or requires (depending on the engine type) that the temperature control valve in the central cooling water circuit is set to minimum 10°C. Alternatively, if the seawater pumps are flow controlled, the setpoint should be approximately 4°C above the seawater temperature, but not lower than a temperature of 10°C.

In this way, the temperature follows the outboard seawater temperature when the central cooling water temperature exceeds 10°C, see note 1) in Fig. 11.02.01.

Standard, recommended setpoint:	10°C
EGR and EcoEGR, required setpoint:	10°C

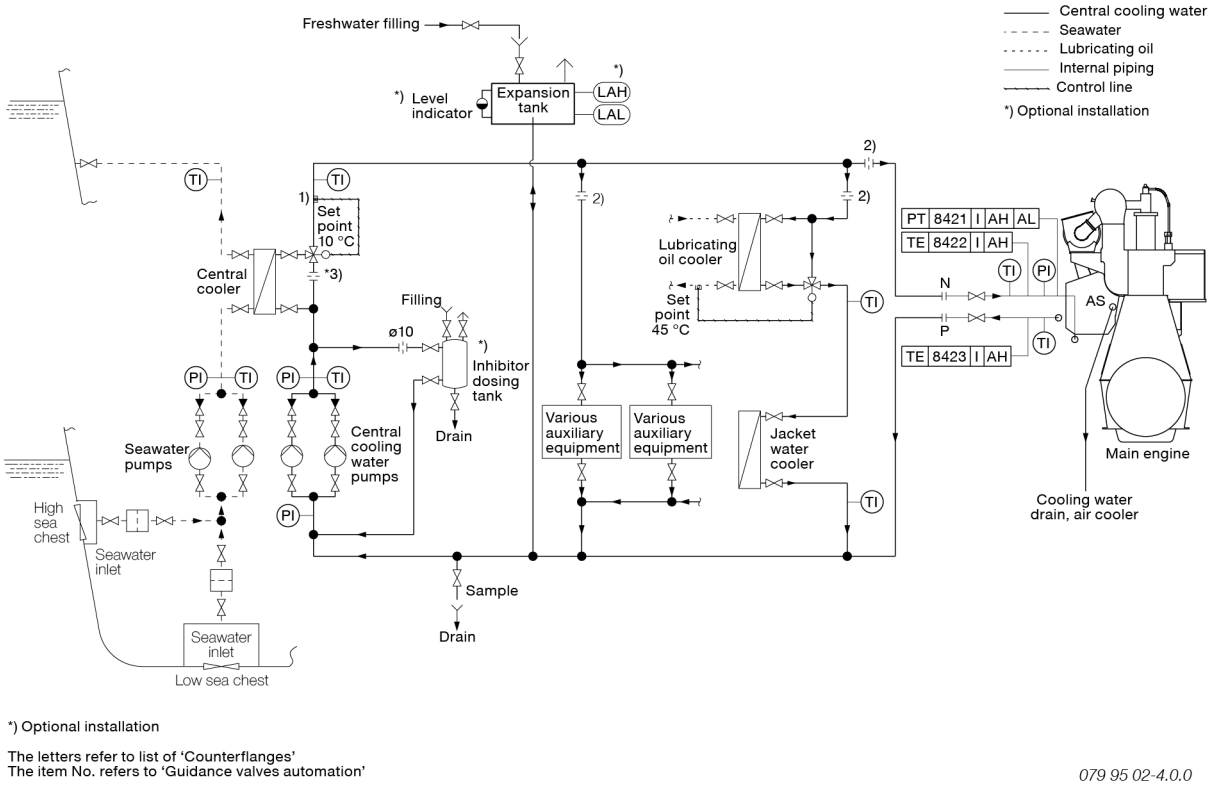

Fig. 11.02.01: Central cooling water system

2025-06-17 - en

Cooling water pump capacities

The pump capacities listed by Everllence cover the requirement of the main engine only.

For any given plant, the specific capacities have to be determined according to the actual plant specification, and the number of auxiliary equipment. Such equipment includes gensets, starting air compressors, provision compressors, air conditioning compressors, etc.

Section 6.04 contains a guideline for selecting centrifugal pumps.

Cooling water piping

Orifices (or, for example, lockable adjustable valves) must be installed to create:

- the proper distribution of flow between each of the central cooling water consumers, see note 2) in Fig. 11.02.01.
- a differential pressure identical to that of the central cooler at nominal central cooling water pump capacity, see note 3) in Fig. 11.02.01.

For external pipe connections, we prescribe the following maximum water velocities:

Central cooling water	3.0 m/s
Seawater	3.0 m/s

Expansion tank volume

The expansion tank design must be open to the atmosphere. Venting pipes entering the tank must terminate below the lowest possible water level, i.e. below the low-level alarm.

The expansion tank volume has to be 10% of the total central cooling water amount in the system.

The 10% expansion tank volume is defined as the volume between the lowest level (at the low-level alarm sensor) and the overflow pipe, or high-level alarm sensor.

If the pipe system design may result in air pockets, these have to be vented to the expansion tank.

2025-06-17 - en

Components for central cooling water system

Seawater cooling pumps

The pumps should be of the centrifugal type.

Seawater flow	see CEAS application
Pump head	2.0 bar
Test pressure	according to class rules
Working temperature, normal	0-32°C
Working temperature	maximum 50°C

The flow capacity must be within a range from 100 to 110% of the capacity stated.

The pump head of the pumps should be based on the total actual pressure drop across the seawater cooling water system.

Section 6.04 contains a guideline for selecting centrifugal pumps.

Central cooler

The cooler should be of the shell and tube, or plate heat exchanger type and made of seawater resistant material.

Heat dissipation	see CEAS application
Central cooling water flow	see CEAS application
Central cooling water temperature, outlet	36°C
Pressure drop on central cooling water side	maximum 0.7 bar
Seawater flow	see CEAS application
Seawater temperature, inlet	32°C
Pressure drop on seawater side	maximum 1.0 bar

The pressure drop may be larger, depending on the actual cooler design.

The heat dissipation, and the seawater flow figures are based on MCR output at tropical conditions, i.e. a seawater temperature of 32°C and an ambient air temperature of 45°C.

Overload running at tropical conditions will slightly increase the temperature level in the cooling system, and will also slightly influence the engine performance.

Central cooling water pumps

The pumps should be of the centrifugal type.

Central cooling water flow	see CEAS application
Pump head	2.5 bar
Delivery pressure	depends on the location of the expansion tank

2025-05-12 - en

Test pressure	according to class rules
Working temperature	80°C
Design temperature	100°C

The flow capacity must be within a range from 100 to 110% of the capacity stated.

The CEAS application covers the main engine only. The pump head of the pumps should be based on the total actual pressure drop across the central cooling water system.

Section 6.04 contains a guideline for selecting centrifugal pumps.

Central cooling water thermostatic valve

The low-temperature cooling system should be equipped with a three-way valve, which is mounted as a mixing valve, bypassing all or part of the freshwater around the central cooler.

The sensor should be located at the outlet pipe from the thermostatic valve.

Lubricating oil cooler thermostatic valve

The lubricating oil cooler should be equipped with a three-way valve, which is mounted as a mixing valve, bypassing all or part of the freshwater around the lubricating oil cooler.

The sensor should be located at the lubricating oil outlet pipe from the lubricating oil cooler and set to keep a lubricating oil temperature of 45°C.

Chemical corrosion inhibitor and dosing tank

To ensure proper mixing of the inhibitor into the central cooling water system, the tank design must enable a small flow of jacket cooling water through the tank from the jacket water pumps. The tank must be suitable for mixing inhibitors on both powder and liquid form.

Recommended tank size	0.3 m^3
Design pressure	max. central cooling water system pressure
Suggested inlet orifice size	ø10 mm

Lubricating oil cooler

See Chapter 8 ‘Lubricating oil’.

Jacket water cooler

See Chapter 12 ‘High-temperature cooling water’.

2025-05-12 - en

Scavenge air cooler

The scavenge air cooler is an integrated part of the main engine.

Heat dissipation	see CEAS application
Central cooling water flow	see CEAS application
Central cooling water temperature, inlet	36°C
Pressure drop on low-temperature freshwater side	0.3-0.8 bar

Cooling water pipes for scavenge air cooler

Fig. 11.08.01 and 11.08.02 show diagrams of cooling water pipes for the scavenge air cooler.

2025-05-12 - en

This page is intentionally left blank

2025-05-12 - en

Seawater cooling system

The seawater cooling system is an option for cooling main engine lubricating oil cooler, jacket water cooler, and scavenge air cooler with seawater, see Fig. 11.04.01. The seawater system consists of pumps and a thermostatic valve.

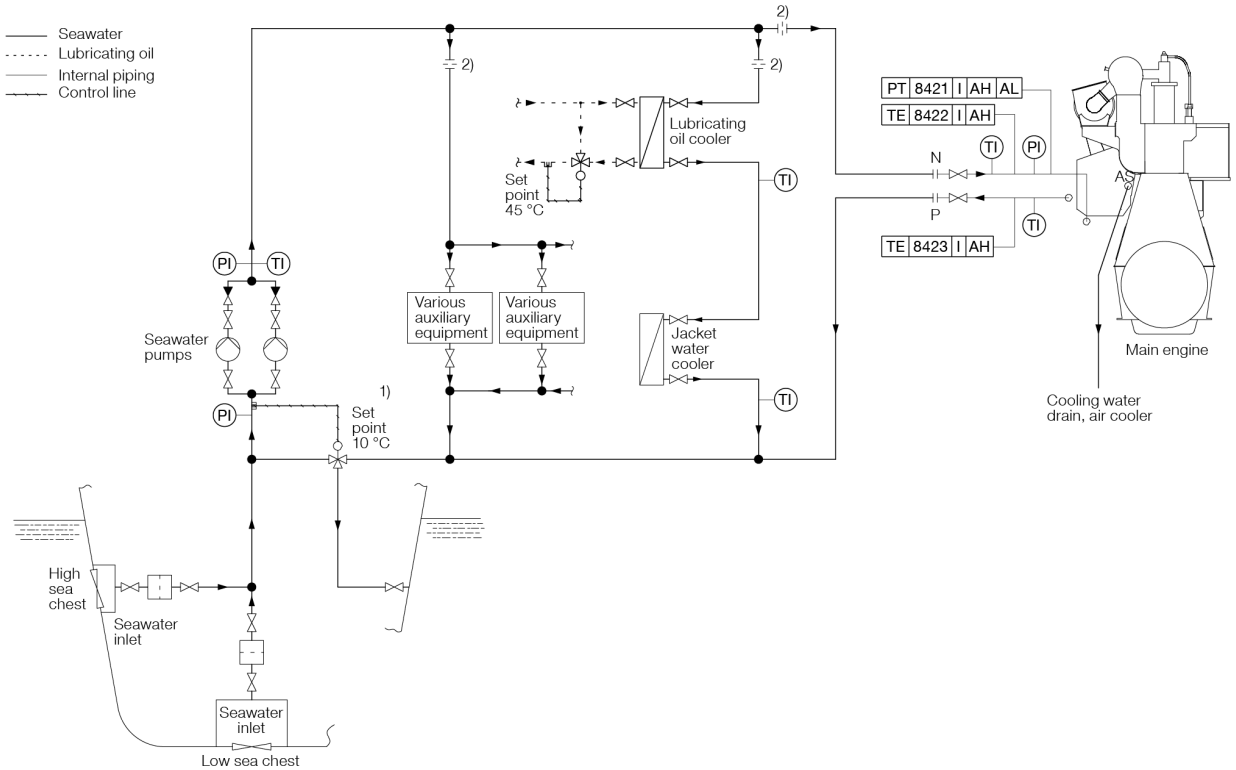

Fig. 11.04.01: Seawater cooling system

Cooling water temperature

The capacity of the seawater pump is based on a seawater outlet temperature of maximum 50°C after passing through the main engine lubricating oil cooler, the jacket water cooler, and the scavenge air cooler.

For an inlet temperature of maximum 32°C (tropical conditions), the maximum temperature increase is 18°C.

A thermostatic valve should be installed to prevent the lubricating oil from stiffening during operation under cold conditions. The thermostatic valve recirculates all, or part of the seawater to the suction side of the pumps. A setpoint of 10°C ensures that the cooling water to the consumers will never drop below this temperature, see note 1) in Fig. 11.04.01.

Cooling water pump capacities

The pump capacities listed by Everllence cover the requirement of the main engine only.

For any given plant, the specific capacities have to be determined according to the actual plant specification and the number of auxiliary equipment. Such equipment include gensets, starting air compressors, provision compressors, air conditioning compressors, etc.

Section 6.04 contains a guideline for selecting centrifugal pumps.

2025-06-17 - en

Cooling water piping

Orifices (or, for example, lockable adjustable valves) must be installed to create a proper distribution of flow between each of the cooling water consumers, see note 2) in Fig. 11.04.01.

For external pipe connections, we prescribe the following maximum water velocity:

Seawater	3.0 m/s

If the pipe system design may result in air pockets, these have to be vented to the expansion tank.

2025-06-17 - en

Components for seawater cooling system

Seawater cooling pumps

The pumps shoud be of the centrifugal type.

Seawater flow	see CEAS application
Pump head	2.5 bar
Test pressure	according to class rules
Working temperature	maximum 50°C

The flow capacity must be within a range from 100 to 110% of the capacity stated.

The pump head of the pumps should be based on the total actual pressure drop across the seawater cooling water system.

Section 6.04 contains a guideline for selecting centrifugal pumps.

Seawater thermostatic valve

The temperature control valve is a three-way mixing valve. The sensor should be located at the seawater inlet to the lubricating oil cooler, and the temperature setpoint must be 10°C.

Seawater flow	see CEAS application
Temperature setpoint	10°C

Lubricating oil cooler

See Chapter 8 ‘Lubricating oil’.

Jacket water cooler

See Chapter 12 ‘High-temperature cooling water’.

Scavenge air cooler

The scavenge air cooler is an integrated part of the main engine.

Heat dissipation	see CEAS application
Seawater flow	see CEAS application
Seawater temperature, for seawater cooling inlet	maximum 32°C
Pressure drop on cooling water side	0.3-0.8 bar

The heat dissipation, and the seawater flow are based on an MCR output at tropical conditions, i.e. a seawater temperature of 32°C and an ambient air temperature of 45°C.

2025-04-28 - en

Cooling water pipes for scavenge air cooler

Figs. 11.08.01 and 11.08.02 show diagrams of cooling water pipes for scavenge air coolers.

2025-04-28 - en

Combined cooling water system

The combined cooling water system is characterised by having one heat exchanger and a seawater cooled scavenge air cooler. The other coolers, including the jacket water cooler, are cooled with the central cooling water.

In the combined cooling water system, the temperature of the cooling water to the scavenge air cooler will always be approx. 4°C lower than in a central cooling water system.

Cooling water temperature

Capacities of seawater pumps and central cooling water pumps are based on a maximum freshwater outlet temperature of 54°C after the main engine lubricating oil cooler.

For an inlet temperature of maximum 36°C (tropical conditions), the maximum temperature increase is 18°C.

The temperature control valve in the central cooling water circuit can be set to minimum 10°C and maximum 36°C, see note 1) in Fig. 11.06.01.

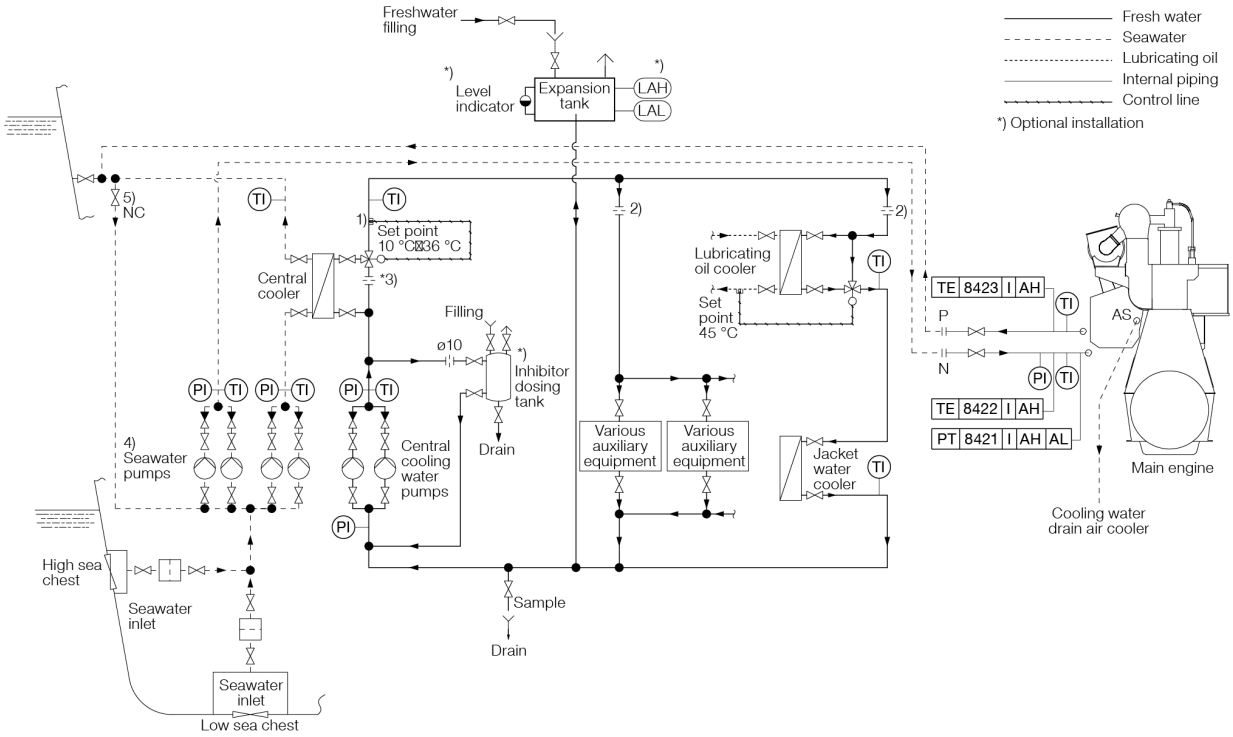

Fig. 11.06.01: Combined cooling water system

Alternatively, if the seawater pumps are flow controlled, the setpoint should be approximately 4°C above the seawater temperature, but not lower than a temperature of 10°C.

To avoid seawater temperatures below 0°C at the scavenge air cooler inlet, a manual by-pass valve is installed in the seawater circuit, see note 5) in Fig. 11.06.01. The valve recirculates all, or part of the seawater to the suction side of the pumps.

2025-06-17 - en

Cooling water pump capacities

The pump capacities listed by Everllence cover the requirement of the main engine only.

For any given plant, the specific capacities have to be determined according to the actual plant specification, and the number of auxiliary equipment. Such equipment includes gensets, starting air compressors, provision compressors, air conditioning compressors, etc.

Fig. 11.06.01 (and note 4) shows two pair of seawater pumps, one pair for the main engine scavenge air cooler and one for the central cooling water system. Alternatively, seawater pumps serving both systems can be installed.

Section 6.04 contains a guideline for selecting centrifugal pumps.

Cooling water piping

Orifices (or, for example, lockable adjustable valves for instance) must be installed to create:

- a proper distribution of flow between each of the central cooling water consumers, see note 2) in Fig. 11.06.01.
- a differential pressure identical to that of the central cooler at nominal central cooling water pump capacity, see note 3) in Fig. 11.06.01.

For external pipe connections, we prescribe the following maximum water velocities:

Central cooling water	3.0 m/s
Seawater	3.0 m/s

Expansion tank volume

The expansion tank design must be open to the atmosphere. Venting pipes entering the tank must terminate below the lowest possible water level, i.e. below the low-level alarm.

The expansion tank volume has to be 10% of the total central cooling water amount in the system. The 10% expansion tank volume is defined as the volume between the lowest level (at the low-level alarm sensor) and the overflow pipe, or high-level alarm sensor.

If the pipe system design may result in air pockets, these have to be vented to the expansion tank.

2025-06-17 - en

Components for combined cooling water system

Seawater cooling pumps

The pumps should be of the centrifugal type.

Seawater flow	see CEAS application
Pump head	2.0 bar
Test pressure	according to class rules
Working temperature, normal	0-32°C
Working temperature	maximum 50°C

The flow capacity must be within a range from 100 to 110% of the capacity stated.

The pump head of the pumps should be based on the total actual pressure drop across the seawater cooling water system.

Section 6.04 contains a guideline for selecting centrifugal pumps.

Central cooler

The cooler should be of the shell and tube, or plate heat exchanger type and made of seawater resistant material.

Heat dissipation	see CEAS application
Central cooling water flow	see CEAS application
Central cooling water temperature, outlet	36°C
Pressure drop on central cooling side	maximum 0.7 bar
Seawater flow	see CEAS application
Seawater temperature, inlet	32°C
Pressure drop on seawater side	maximum 1.0 bar

The pressure drop may be larger, depending on the actual cooler design.

The heat dissipation and the seawater flow figures are based on MCR output at tropical conditions, i.e. a seawater temperature of 32°C and an ambient air temperature of 45°C.

Overload running at tropical conditions will slightly increase the temperature level in the cooling system, and will also slightly influence the engine performance.

Central cooling water pumps

The pumps should be of the centrifugal type.

Central cooling water flow	see CEAS application
Pump head	2.5 bar
Delivery pressure	depends on the location of the expansion tank

2025-05-12 - en

Test pressure	according to class rules
Working temperature	80°C
Design temperature	100°C

The flow capacity must be within a range from 100 to 110% of the capacity stated.

The CEAS application covers the main engine only. The pump head of the pumps should be based on the total actual pressure drop across the central cooling water system.

Section 6.04 contains a guideline for selecting centrifugal pumps.

Central cooling water thermostatic valve

The low temperature cooling system should be equipped with a three-way valve, which is mounted as a mixing valve, bypassing all or part of the fresh-water around the central cooler.

The sensor should be located at the outlet pipe from the thermostatic valve and set to keep a temperature of minimum 10°C and maximum 36°C.

Lubricating oil cooler thermostatic valve

The lubricating oil cooler should be equipped with a three-way valve, which is mounted as a mixing valve, bypassing all or part of the freshwater around the lubricating oil cooler.

The sensor should be located at the lubricating oil outlet pipe from the lubricating oil cooler and set to keep a lubricating oil temperature of 45°C.

Chemical corrosion inhibitor and dosing tank

To ensure proper mixing of the inhibitor into the combined cooling water system, the tank design must enable a small flow of jacket cooling water through the tank from the jacket water pumps. The tank must be suitable for mixing inhibitors on both powder and liquid form.

Recommended tank size	0.3 m^3
Design pressure	max. combined cooling water system pressure
Suggested inlet orifice size	ø10 mm

Lubricating oil cooler

See Chapter 8 ‘Lubricating oil’.

Jacket water cooler

See Chapter 12 ‘High-temperature cooling water’.

2025-05-12 - en

Scavange air cooler

The scavenge air cooler is an integrated part of the main engine.

Heat dissipation	see CEAS application
Seawater flow	see CEAS application
Central cooling water temperature, inlet	32°C
Pressure drop on seawater side	0.3-0.8 bar

Cooling water pipes for scavenge air cooler

Figs. 11.08.01 and 11.08.02 show diagrams of cooling water pipes for the scavenge air cooler.

2025-05-12 - en

This page is intentionally left blank

2025-05-12 - en

Cooling water pipes for scavenge air cooler

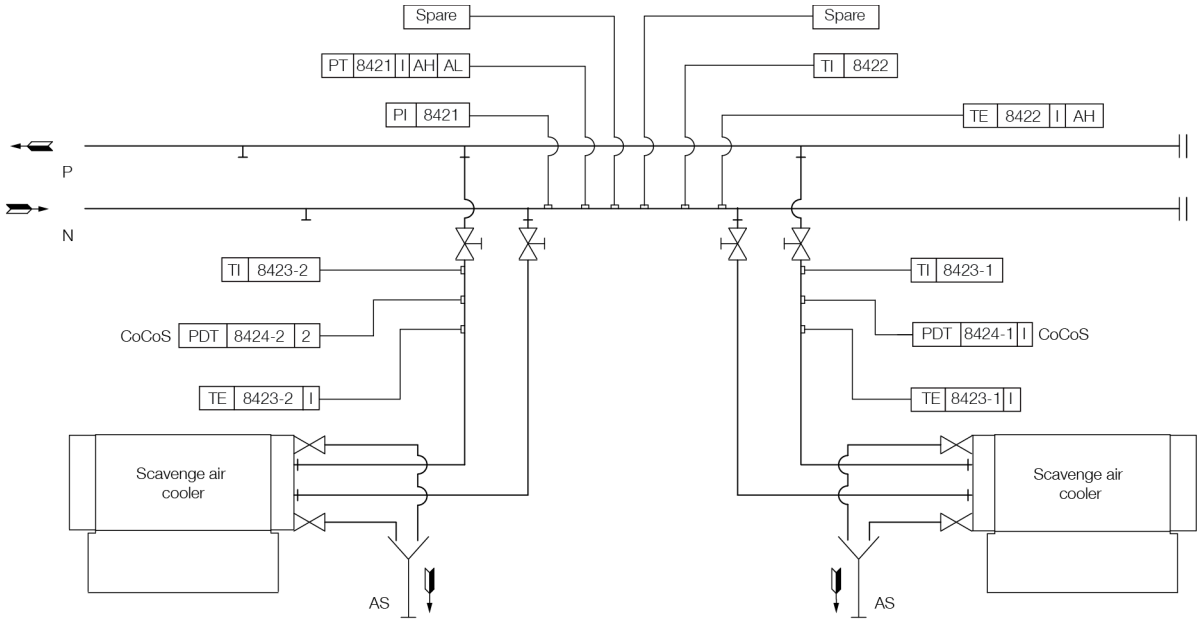

The letters refers to list of 'Counterflanges' . The item no. refer to 'Guidance Values Automation'

121 14 99-1.9.0

Fig. 11.08.01: Cooling water pipes for engines with two or more turbochargers

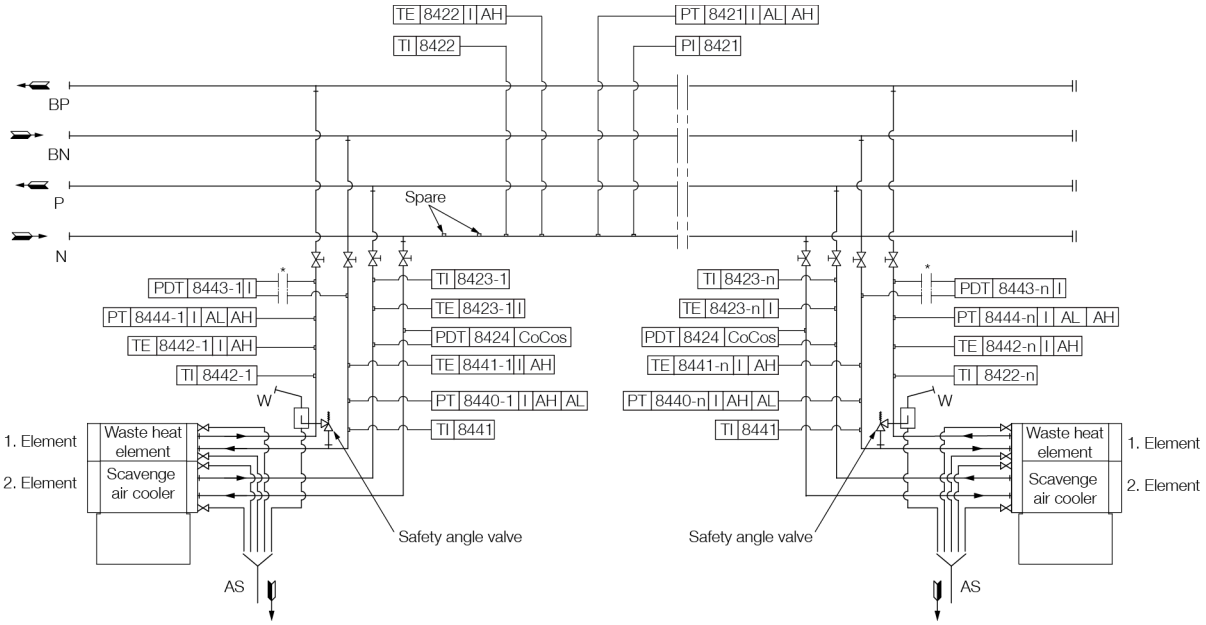

The letters refer to list of 'Counterflanges'. The item no. refer to 'Guidance Values Automation'
* Calculated value: PT8444-n subtracted from PT8440-n, if possible
n Refer to number of air coolers

521 21 78-2.3.1

Fig. 11.08.02: Cooling water pipes with waste heat recovery for engines with two or more turbochargers

2025-05-12 - en

This page is intentionally left blank

2025-05-12 - en

01 Engine Design
02 Engine Layout and Load Diagrams, SFOC, dot 5
03 Turbocharger Selection & Exhaust Gas Bypass
04 Electricity Production
05 Installation Aspects
06 List of Capacities: Pumps, Coolers & Exhaust Gas
07 Fuel
08 Lubricating Oil
09 Cylinder Lubrication
10 Piston Rod Stuffing Box Drain Oil
11 Low-temperature Cooling Water
12 High-temperature Cooling Water
13 Starting and Control Air
14 Scavenge Air
15 Exhaust Gas
16 Engine Control System
17 Vibration Aspects
18 Monitoring Systems and Instrumentation
19 Dispatch Pattern, Testing, Spares and Tools
20 Project Support and Documentation
21 Appendix

This page is intentionally left blank

High-temperature cooling water system

The high-temperature (HT) cooling water system, also known as the jacket cooling water (JCW) system, is used for cooling the cylinder unit components of the main engine and for heating the fuel oil drain pipes. The design of the jacket cooling water piping varies, depending on the engine type and fuel sulphur content.

During short stays in ports, it is recommended to keep the engine preheated using a preheater in the jacket cooling water system.

Depending on the jacket cooling water temperature, different load procedures must be adhered to during engine start-up.

The engine jacket water must be carefully treated, maintained, and monitored to avoid corrosion, corrosion fatigue, cavitation, and scale formation. Therefore, it is recommended installing a chemical corrosion inhibitor dosing tank and ensure the capability to take water samples from the JCW system.

Jacket cooling water piping

The following introductory text describes the general principle of the jacket cooling water system.

The jacket water pump draws water from the jacket water cooler outlet through a deaerating tank, and delivers it to the engine.

A thermostatically controlled regulating valve at the cooler inlet, or alternatively at the outlet from the cooler, keeps the main engine cooling water outlet at a fixed temperature level, independent of the engine load.

A deaerating tank alarm device is installed between the deaerating tank and the expansion tank. If a large amount of air is detected in the JCW circuit, for example caused by a cylinder liner rupture, the alarm device will activate an alarm.

An expansion tank is installed to create a sufficient static pressure in the JCW system and to provide space for the water to expand and contract. The expansion tank must be placed at least 15 m above the top of the main engine exhaust gas valves.

There are differences in the design of the jacket cooling water piping, depending on the engine type and the fuel sulphur content.

The following subsections and figures describe the jacket cooling water piping for:

1. ME/-LGI engines and a fuel sulphur content <=0.5% (Fig. 12.01.01)
2. ME/-LGI engine types S30ME-B9.5, S35ME-C9.7, S40ME-C9.5, G45ME-C9.5, and S46ME-C8.6 and a fuel sulphur content >0.5% (Fig. 12.01.02)
3. All ME/-LGI engines not mentioned in item 2, and a fuel sulphur content >0.5% (Fig. 12.01.03)
4. ME-GI engines (Fig. 12.01.04)

2025-06-23 - en

Jacket cooling water piping 1

Fig. 12.01.01 shows the jacket cooling water piping valid for ME/-LGI engines operating on fuel with a sulphur content <=0.5%. Numbers 1) to 6) on Fig. 12.01.01 refer to notes listed after the figure.

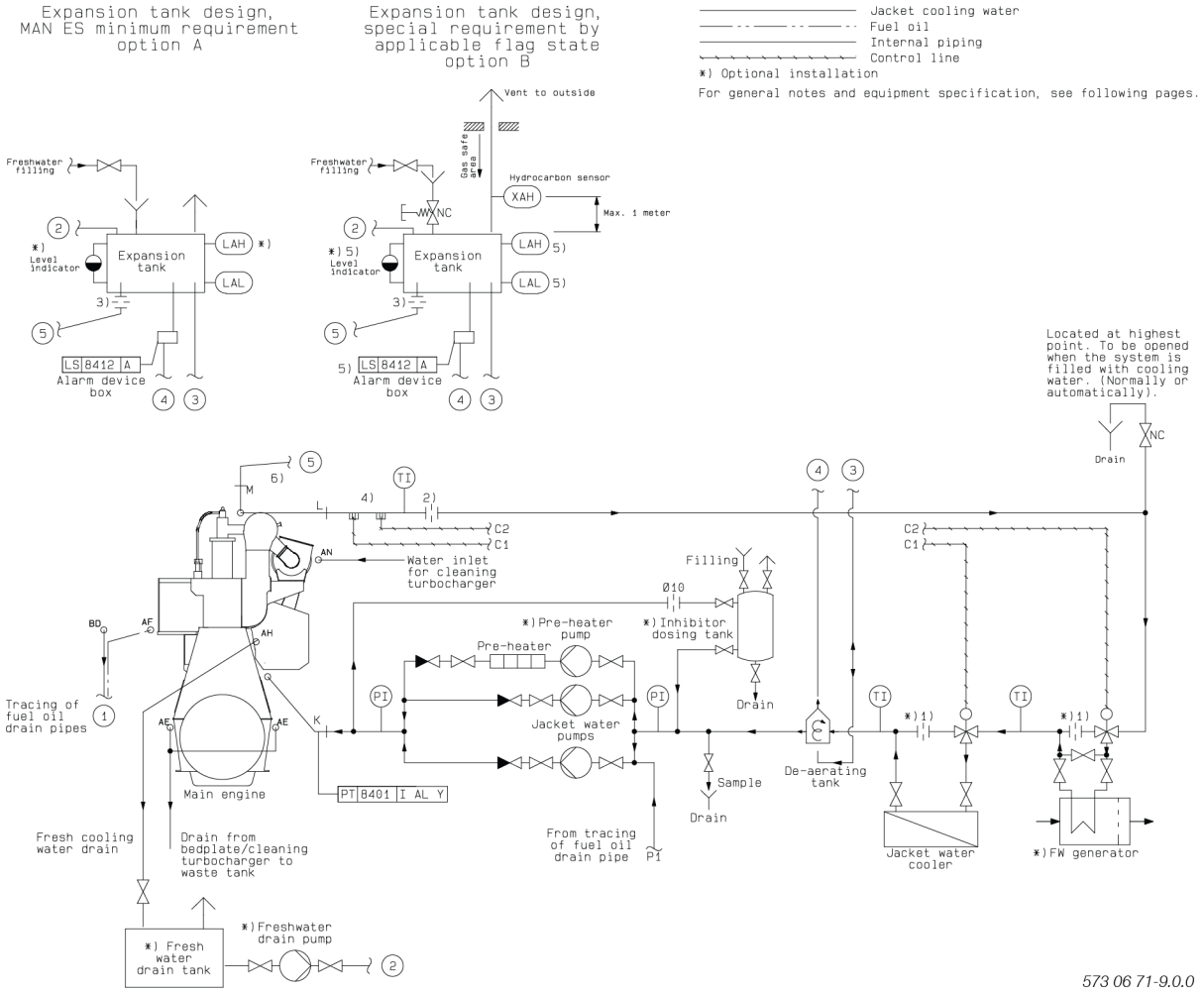

Fig. 12.01.01: Jacket cooling water system for ME/-LGI engines (fuel sulphur content <=0.5%)

Notes:

1. Orifices (or lockable adjustable valves) to be installed to create a differential pressure identical to that of the jacket water cooler/freshwater generator at nominal jacket water pump capacity.
2. (Optional) Install orifices to create a minimum inlet pressure at engine inlet connection "K" (at sensor PT 8401), which is higher than the minimum pressure stated in "Guidance Values Automation" (GVA).
3. Flow restriction: Install an orifice with a small hole to avoid jacket water flow through the expansion tank.

2025-06-23 - en

4. Temperature setpoint for thermostatic regulating valves
   Thermostatic regulating valve for jacket water cooler: If a thermostatic regulating valve is installed for the freshwater generator, the setpoint is 87°C, otherwise the setpoint is 85°C.
   Thermostatic regulating valve for freshwater generator cooler: Setpoint: 83°C.
5. IEC Ex proof equipment classification
   Sensor type: According to applicable classification society requirement.
6. Deaeration of cooling water manifold of exhaust gas valve
   Engine connection M: A venting pipe has to be arranged in either the fore or aft end of the cooling water manifold discharge pipe from the exhaust gas valve (opposite end of discharge to jacket water pump). An automatic deaerating valve, which is located at the engine, can replace the vent pipe for expansion tank design option A.

The letters refer to the list of "Counterflanges"

For external pipe connections, we prescribe the following maximum water velocity:

Jakcet cooling water	3.0 m/s

2025-06-23 - en

Jacket cooling water piping 2

Fig. 12.01.02 shows the jacket cooling water piping valid for ME/-LGI engine types: S30ME-B9.5, S35ME-C9.7, S40ME-C9.5, G45ME-C9.5, and S46ME-C8.6 operating on a fuel sulphur content >0.5%. Numbers 1) to 6) on Fig. 12.01.02 refer to notes listed after the figure.

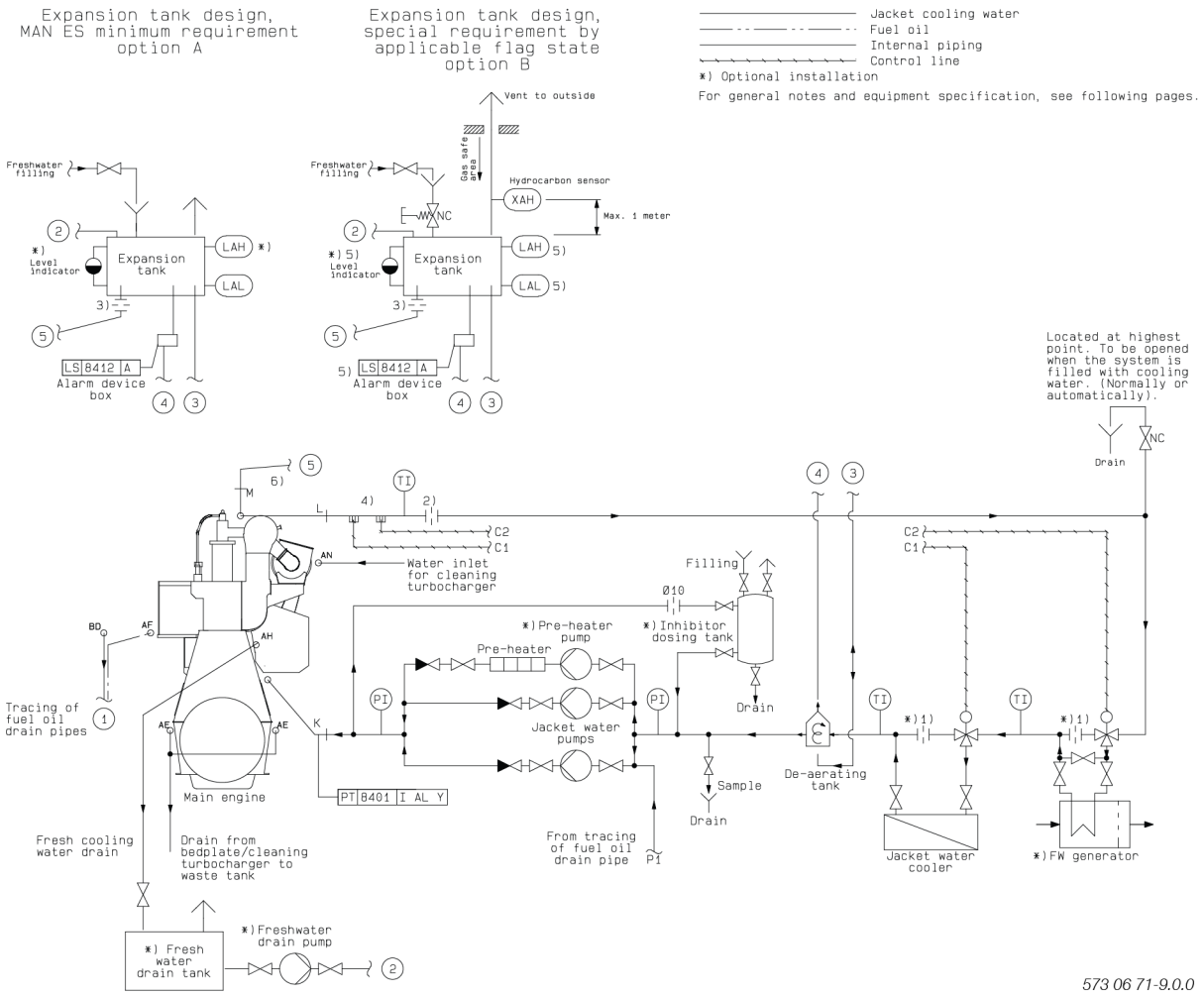

Fig. 12.01.02: Jacket cooling water system for ME/-LGI engine types: S30ME-B9.5, S35ME-C9.7, S40ME-C9.5, G45ME-C9.5, and S46ME-C8.6 (fuel sulphur content >0.5%)

Notes:

1. Orifices (or lockable adjustable valves) to be installed to create a differential pressure identical to that of the jacket water cooler/freshwater generator at nominal jacket water pump capacity.
2. (Optional) Install orifices to create a minimum inlet pressure at engine inlet connection "K" (at sensor PT 8401), which is higher than the minimum pressure stated in "Guidance Values Automation" (GVA).
3. Flow restriction: Install an orifice with a small hole to avoid jacket water flow through the expansion tank.

2025-06-23 - en

4. Temperature setpoint for thermostatic regulating valves
   Thermostatic regulating valve for jacket water cooler: If a thermostatic regulating valve is installed for the freshwater generator, the setpoint is 87°C, otherwise the setpoint is 85°C.
   Thermostatic regulating valve for freshwater generator cooler: Setpoint: 83°C
5. IEC Ex proof equipment classification
   Sensor type: According to applicable classification society requirement.
6. Deaeration of cooling water manifold of exhaust gas valve
   Engine connection M: A venting pipe has to be arranged in either the fore or aft end of the cooling water manifold discharge pipe from the exhaust gas valve (opposite end of discharge to jacket water pump). An automatic deaerating valve, which is located at the engine, can replace the vent pipe for expansion tank design option A.

The letters refer to the list of "Counterflanges"

For external pipe connections, we prescribe the following maximum water velocity:

Jakcet cooling water	3.0 m/s

2025-06-23 - en

Jacket cooling water piping 3

Fig. 12.01.03 shows the jacket cooling water piping valid for ME/-LGI engines, which are not mentioned in item 2 and Section 'Jacket cooling water 2', operating on fuel with a sulphur content >0.5%. Numbers 1) to 5) on Fig. 12.01.03 refer to notes listed after the figure.

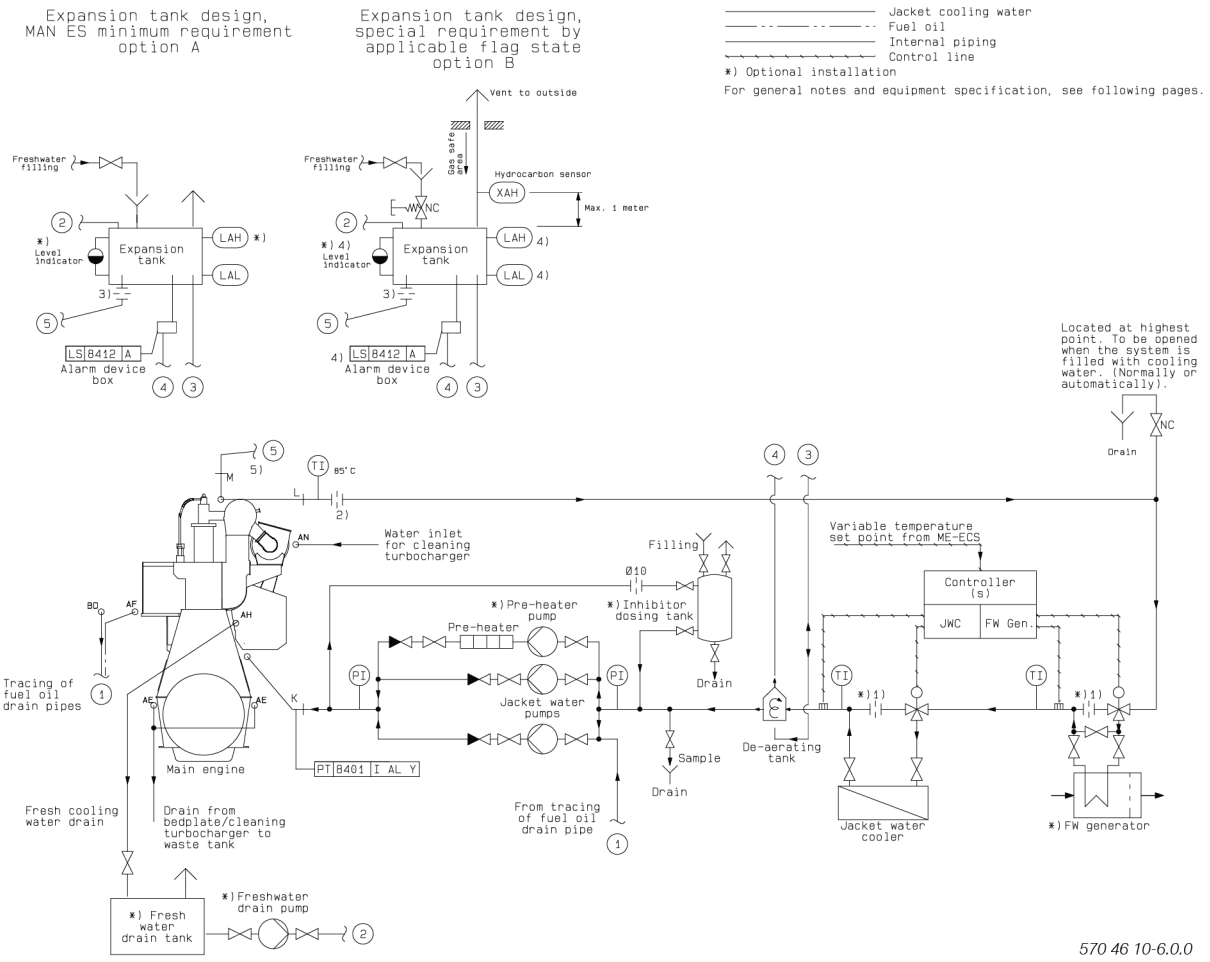

Fig. 12.01.03: Jacket cooling water system for ME/-LGI engines which are not mentioned in item 2 and Section 'Jacket cooling water 2' (fuel sulphur content >0.5%)

Notes:

1. Orifices (or lockable adjustable valves) to be installed to create a differential pressure identical to that of the jacket water cooler/freshwater generator at nominal jacket water pump capacity.
2. (Optional) Install orifices to create a minimum inlet pressure at engine inlet connection "K" (at sensor PT 8401), which is higher than the minimum pressure stated in "Guidance Values Automation" (GVA).
3. Flow restriction: Install an orifice with a small hole to avoid jacket water flow through the expansion tank.
4. IEC Ex proof equipment classification
   Sensor type: According to applicable classification society requirement.

2025-06-23 - en

5. Deaeration of cooling water manifold of exhaust gas valve
   Engine connection M: A venting pipe has to be arranged in either the fore or aft end of the cooling water manifold discharge pipe from the exhaust gas valve (opposite end of discharge to jacket water pump). An automatic deaerating valve, which is located at the engine, can replace the vent pipe for expansion tank design option A.

The letters refer to the list of "Counterflanges"

For external pipe connections, we prescribe the following maximum water velocity:

Jakcet cooling water	3.0 m/s

Jacket cooling water piping 4

Fig. 12.01.04 shows the jacket cooling water piping valid for ME-GI engines. Numbers 1) to 6) on Fig. 12.01.04 refer to notes listed after the figure.

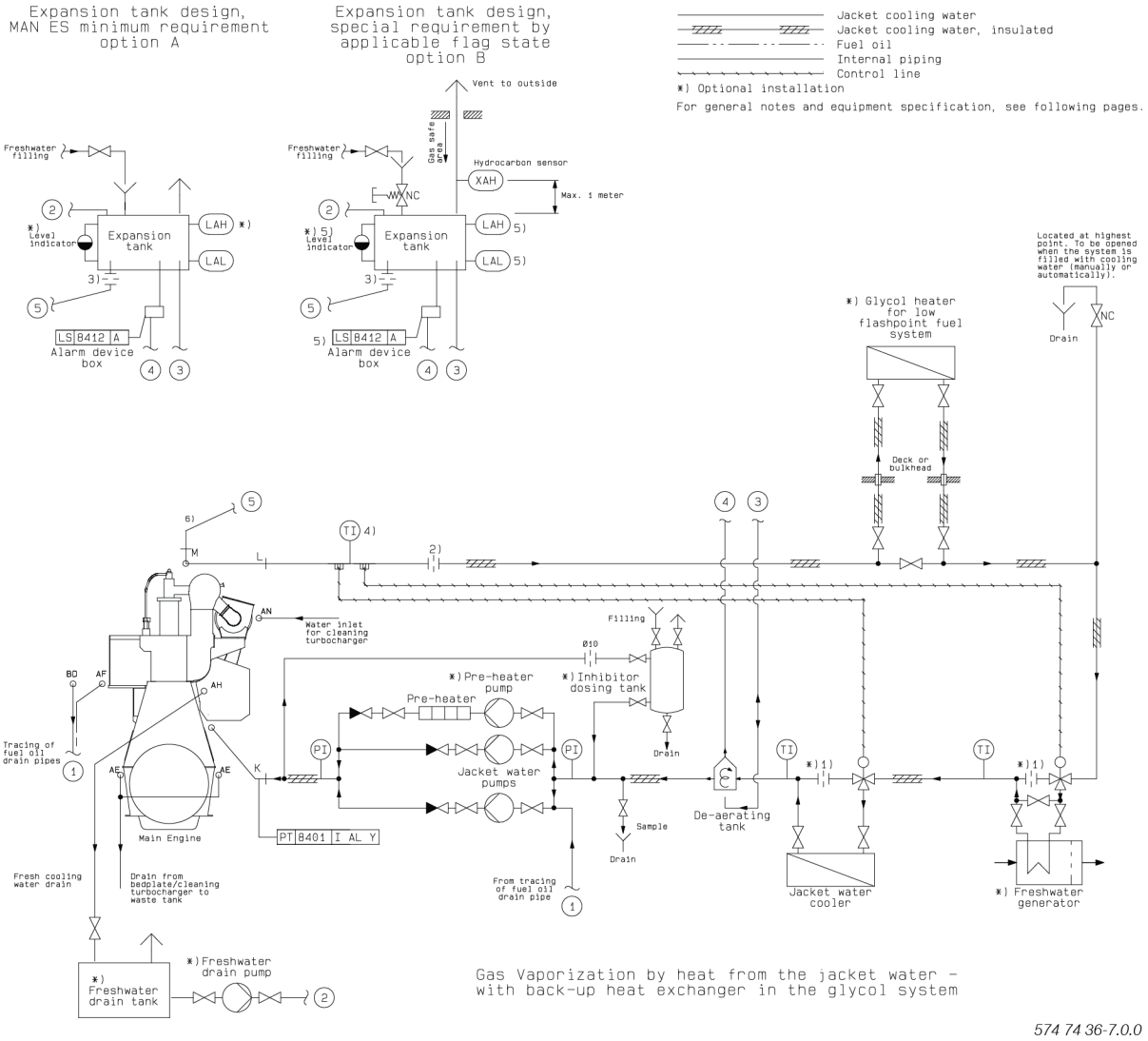

Fig. 12.01.04: Jacket cooling water system for ME-GI engines

Notes:

1. (Optional) Orifices (or lockable adjustable valves) to be installed to create a differential pressure identical to that of the jacket water cooler/freshwater generator at nominal jacket water pump capacity.
2. (Optional) Install orifices to create a minimum inlet pressure at engine inlet connection "K" (at sensor PT 8401), which is higher than the minimum pressure stated in "Guidance Values Automation" (GVA).
3. Flow restriction: Install an orifice with a small hole to avoid jacket water flow through the expansion tank.
4. Temperature setpoint for thermostatic regulating valves
   Thermostatic regulating valve for jacket water cooler: If a thermostatic regulating valve is installed for the freshwater generator, the setpoint is 87°C, otherwise the setpoint is 85°C.
   Thermostatic regulating valve for freshwater generator cooler: Setpoint: 83°C.
5. IEC Ex proof equipment classification
   Sensor type: According to applicable classification society requirement.
6. Deaeration of cooling water manifold of exhaust gas valve
   Engine connection M: A venting pipe has to be arranged in either the fore or aft end of the cooling water manifold discharge pipe from the exhaust gas valve (opposite end of discharge to jacket water pump). An automatic deaerating valve, which is located at the engine, can replace the vent pipe for expansion tank design option A.

The letters refer to the list of "Counterflanges"

For external pipe connections, we prescribe the following maximum water velocity:

Jakcet cooling water	3.0 m/s

2025-06-23 - en

Preheater systems

During short stays in ports (less than four to five days), it is recommended to keep the engine preheated by a built-in preheater in the jacket cooling water system, or by using the auxiliary engine cooling water, or a combination. This is to prevent:

- corrosive attacks on cylinder liners during starting
- temperature variations in the engine structure
- corresponding variations in thermal expansions and the resulting risk of leakages.

The engine jacket cooling water outlet temperature should be kept as high as possible, but not higher than 80°C. If the temperature is lower than 50°C, it should be increased to min. 50°C before start-up.

Jacket cooling water system with a built-in preheater

There are two options for the position of the preheater in the jacket cooling water system. The first option in Fig. 12.01.05 has a separate preheater pump, and the second option in Fig. 12.01.06 uses the jacket water pump as the preheater pump. In both options, preheater operation is controlled by a temperature sensor after the engine outlet.

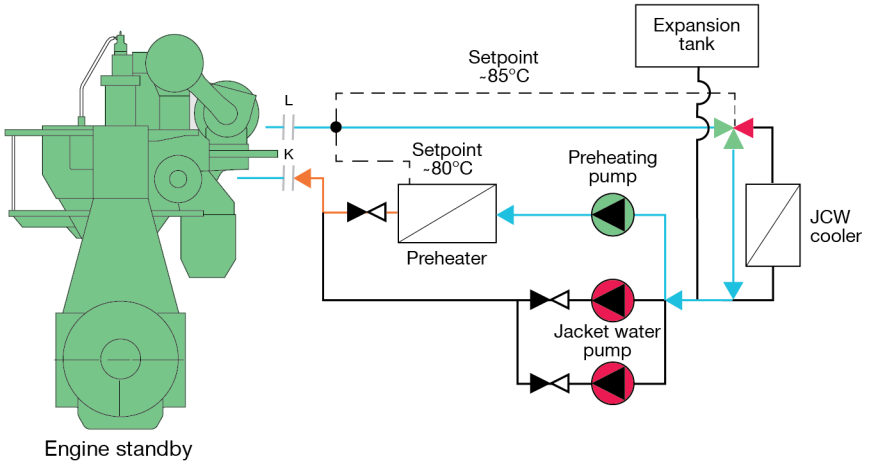

Fig. 12.01.05: Simplified sketch of installed preheater with dedicated preheater pump

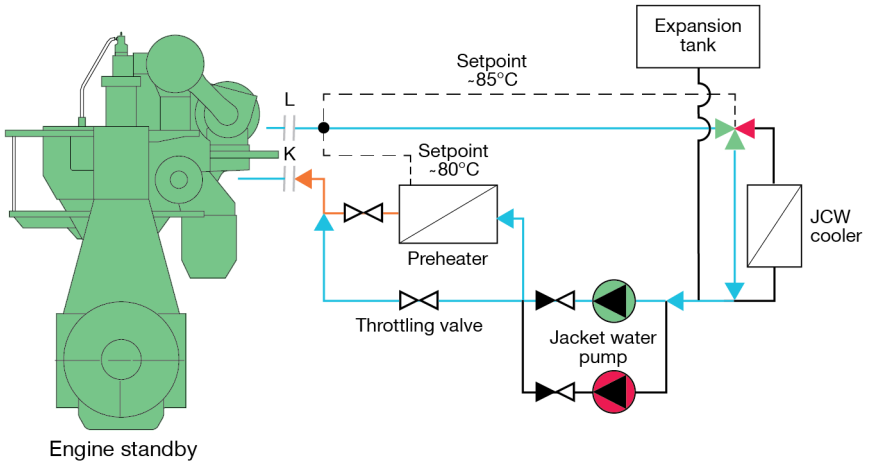

178 71 33-2.0.0

Fig. 12.01.06: Simplified sketch of installed preheater using the jacket water pump

The JCW system in Fig. 12.01.06 uses the jacket water pump as the preheating pump during port stays compared to the system in Fig. 12.01.05, which uses a separate small dedicated preheating pump.

Freshwater generator

A freshwater generator can be installed in the JCW circuit for utilising the heat transferred to the jacket cooling water from the main engine.

Load-up procedures

Normal engine start

Table 12.01.01 shows load-up procedures recommended for a normal engine start.

Warm engine – load-up procedure		
	Fixed pitch propeller (FPP) plants	
Engine load [% SMCR speed]*	Mk. 9+ and 80-bore or larger	All other engines
0-80	Increase gradually	Increase gradually
80-90	Over 60 minutes	Over 30 minutes
90-100	Over 90 minutes	Over 60 minutes
	Controllable pitch propeller (CPP) plants	
Engine load [% SMCR power]*	Mk. 9+ and 80-bore or larger	All other engines
0-50	Increase gradually	Increase gradually
50-75	Over 60 minutes	Over 30 minutes
75-100	Over 90 minutes	Over 60 minutes

* The provided time intervals should be added, for FPP plants, for example, an engine warm-up from 80 to 100% SMCR speed will take 60 + 90 min. = 150 min.

Table 12.01.01: Load procedures for engines with a minimum jacket cooling water temperature of 50°C

The normal load-up procedures must be followed when the cooling water of the engine has a minimum temperature of 50°C, otherwise, exceptional load procedures must be followed.

As Table 12.01.01 shows for Everllence B&W two-stroke engines coupled to FPPs, it is advisable to maintain a minimum engine jacket cooling water temperature of 50°C before initiating engine start-up. The loading process should be gradual, reaching up to 80% of the specified maximum continuous rating speed (SMCR rpm). Subsequently, a further loading to achieve 100% SMCR speed should align with the recommended time intervals in Table 12.01.01.

Similarly for Everllence B&W two-stroke engines coupled to CPPs, the minimum engine jacket cooling water temperature of 50°C is recommended before commencing engine start-up. The loading process should be gradually progressing to 50% of SMCR power. A further loading to reach 100% SMCR power should adhere to the recommended time intervals specified in Table 12.01.01.

Adhering to the temperature and loading guidelines is crucial to ensure a safe and efficient operation of both types of propulsion systems. By following these procedures, potential ssues such as mechanical overload, overheating, and cold corrosion (especially for vessels operating on high-sulphur fuels) can be prevented.

2025-06-23 - en

In summary, strict compliance with the specified temperature and loading procedures outlined in Table 12.01.01 is essential for the reliable and optimal performance of Everllence B&W two-stroke engines coupled to FPPs and CPPs. Following the procedures will contribute to the safety and longevity of marine engines.

Start of cold engine

Under exceptional circumstances where it is not possible to adhere to the standard recommendations in Table 12.01.01, a minimum jacket cooling water temperature of 20°C can be considered acceptable for starting Everllence B&W two-stroke engines. However, it is essential to ensure that a minimum jacket water temperature of 50°C has been reached before loading the engine further, see Table 12.01.02.

Cold engine – load-up procedure		
	FPP plants	
Engine load [% SMCR speed]*	Mk. 9+ and 80-bore or larger	All other engines
0-80	Increase gradually until the jacket cooling water temperature reaches 50°C	Increase gradually until the jacket cooling water temperature reaches 50°C
80-90	Over 60 minutes	Over 30 minutes
90-100	Over 90 minutes	Over 60 minutes
	CPP plants	
Engine load [% SMCR power]*	Mk. 9+ and 80-bore or larger	All other engines
0-50	Increase gradually until the jacket cooling water temperature reaches 50°C	Increase gradually until the jacket cooling water temperature reaches 50°C
50-75	Over 60 minutes	Over 30 minutes
75-100	Over 90 minutes	Over 60 minutes

* The time intervals should be added – see example in Table 12.01.01

Table 12.01.02: Load procedures for engines with a minimum jacket cooling water temperature of 20°C

Note:

The above considerations for starting a cold engine are based on the assumption that the engine has already been well run in.

For further information, see our publication:

Influence of Ambient Temperature Conditions

Chemical corrosion inhibition

Various types of inhibitors are available but, generally, only nitrite-borate based inhibitors are recommended.

Where the inhibitor maker specifies the normal concentration as a specific range, Everllence recommends maintaining the actual concentration in the upper end of that range.

2025-06-23 - en

To be able to follow the condition and chemical properties of the cooling water, and to notice how it develops,Everllence recommends keeping a record of all tests. It is recommended recording the quality of water as follows:

- Once a week:

  Take a sample from the circulating water during running, however, not from the expansion tank or the pipes leading to the tank. Check the condition of the cooling water. Test kits with instructions are normally available from the inhibitor supplier.
- Every third month:

  Take a water sample from the system during running, as described above in "Once a week". Send the sample for laboratory analysis.
- Once a year:

  Empty, flush, and refill the cooling water system. Add the inhibitor.

For further information, refer to our recommendations for treatment of the jacket cooling water/freshwater. The recommendations are available from Everllence, Copenhagen.

Cooling water drain for maintenance

For maintenance of the main engine, a drain arrangement is installed at the engine. By this drain arrangement, the jacket cooling water can be drained to, for example, a freshwater drain tank for possible reuse of the chemical corrosion inhibitor-treated water.

2025-06-23 - en

This page is intentionally left blank

2025-06-23 - en

Components

Jacket water cooling pump

Jacket water cooling pumps should be of the centrifugal type.

Pump flow rate/jacket water flow	see ‘CEAS report’
Pump head (see below)	3.0 bar
Delivery pressure	depends on the location of the expansion tank
Test pressure	according to Class rules
Working temperature	85°C
Max. temperature (design purpose)	100°C

The flow capacity must be within the range from 100 to 110% of the capacity stated.

Determine the pump head of the pumps based on the actual total pressure drop across the cooling water system, i.e. the pressure drop across main engine, jacket water cooler, three-way valve, valves, and other pipe components.

Section 6.04 contains a guideline for selecting centrifugal pumps.

Jacket water cooler

Often the jacket water cooler is a plate heat exchanger, but it can also be a shell and tube cooler.

Heat dissipation	see ‘CEAS report’
Jacket water flow	see ‘CEAS report’
Jacket water temperature, inlet	85°C
Max. working temperature	up to 100°C
Max. pressure drop on jacket water side	0.5 bar
Cooling water flow	see ‘CEAS report’
Cooling water inlet temp., SW cooled	~38°C
Cooling water inlet temp., FW cooled	~43°C
Max. pressure drop on cooling side	0.5 bar

The following materials should be used for the cooler:

Seawater cooled	SW resistant (for example, titanium or copper alloy for tube coolers)
Freshwater cooled	stainless steel

The heat dissipation and flow are based on SMCR output at tropical conditions, i.e. a seawater temperature of 32°C and an ambient air temperature of 45°C.

2025-06-23 - en

Jacket water thermostatic regulating valve

The main engine cooling water outlet temperature should be kept at a fixed temperature of 85°C, independent of the engine load. This is done by a three-way thermostatic regulating valve.

Jacket water flow	see 'CEAS report'
Max. working temperature	up to 100°C
Max. pressure drop	~0.3 bar
Min. pressure drop	~0.1 bar
Actuator type	electric or pneumatic is recommended
Recommended leak rate	less than 0.5% of nominal flow. A low valve leak rate specified for the valve port against the cooler will provide better utilisation of the heat available for freshwater production

Valve controller specification, where a variable setpoint signal from the engine control system is required:

Remote setpoint signal standard	4-20 mA
Range	0-4 mA = 65°C; 20 mA = 95°C

Expansion tank

The expansion tank must be designed as an open tank towards the atmosphere. Venting pipes, which enter the tank, must terminate below the lowest possible water level, i.e. below the low-level alarm.

The expansion tank must be located at least 15 m above the top of the main engine exhaust gas valves.

The expansion tank volume has to be at least 10% of the total jacket cooling water (JCW) amount in the system.

The expansion tank volume is defined as the volume between the lowest level (at the low-level alarm sensor) and the overflow pipe, or high-level alarm sensor.

2025-06-23 - en

De-aerating tank and alarm device

Fig. 12.02.01 and Table 12.02.01 show the design and dimensions of the de-aerating tank and Fig 12.02.02 shows the corresponding alarm device.

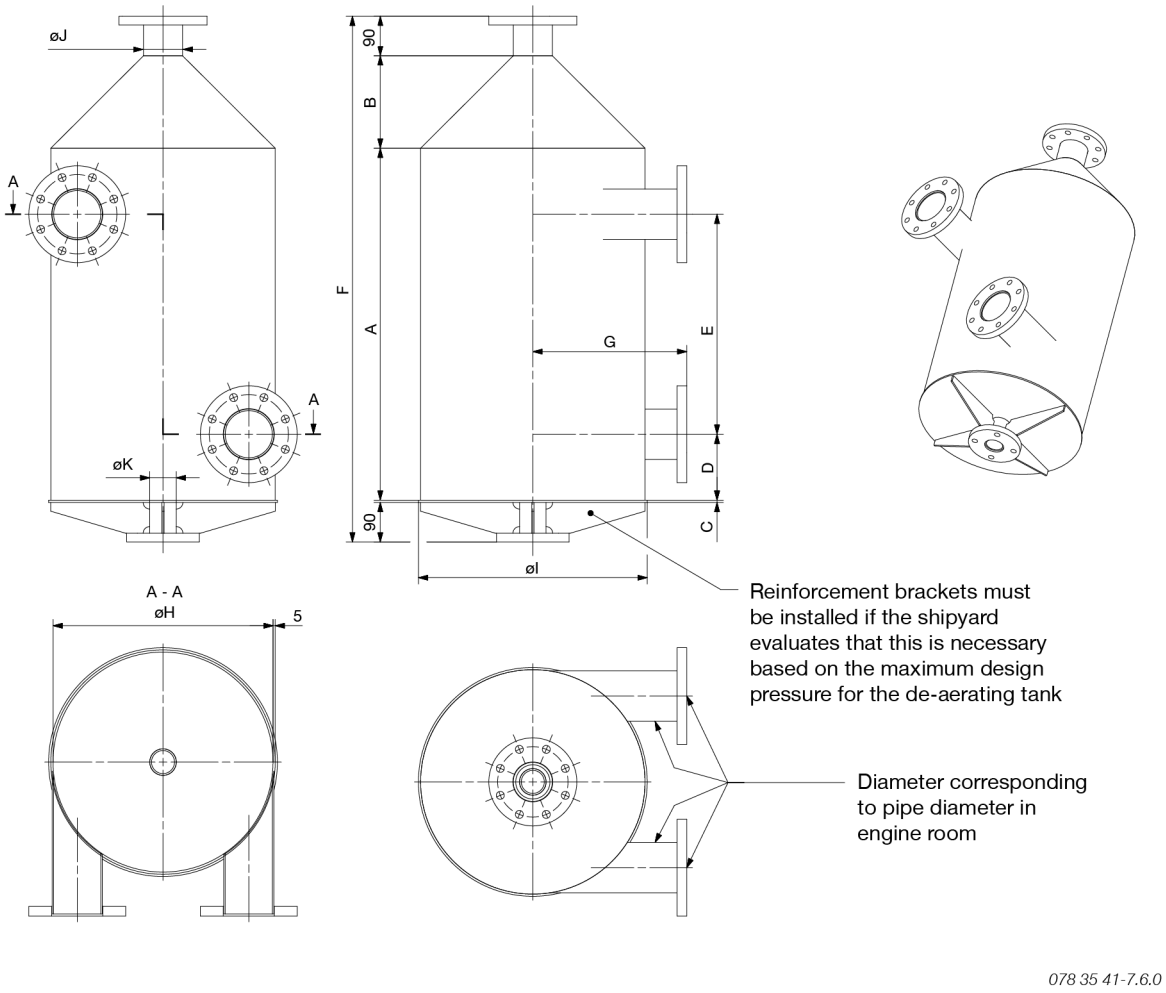

Fig. 12.02.01: De-aerating tank dimensions

2025-06-23 - en

Tank size (m^3)	0.03	0.05	0.1	0.16	0.25	0.35	0.70
Max. freshwater capacity (m^3/h)	80	130	190	300	410	520	700
Max. nominal bore (mm)	100	125	150	200	225	250	300
A (mm)	550	600	700	800	900	1000	1,200
B (mm)	100	125	175	210	260	300	340
C (mm)	5	5	5	5	8	8	8
D (mm)	125	150	150	150	200	200	200
E (mm)	270	300	400	500	550	600	800
F (mm)	835	910	1,060	1,195	1,348	1,488	1,728
G (mm)	235	250	300	350	425	450	550
øH (mm)	250	300	400	500	600	700	800
øI (mm)	270	320	420	520	620	720	820
øJ (mm)	DN 50	DN 50	DN 50	DN 80	DN 80	DN 100	DN 100
øK (mm)	DN 32	DN 32	DN 32	DN 50	DN 50	DN 80	DN 80

Table 12.02.01: Dimensions of de-aerating tank

DN: Diameter nominal

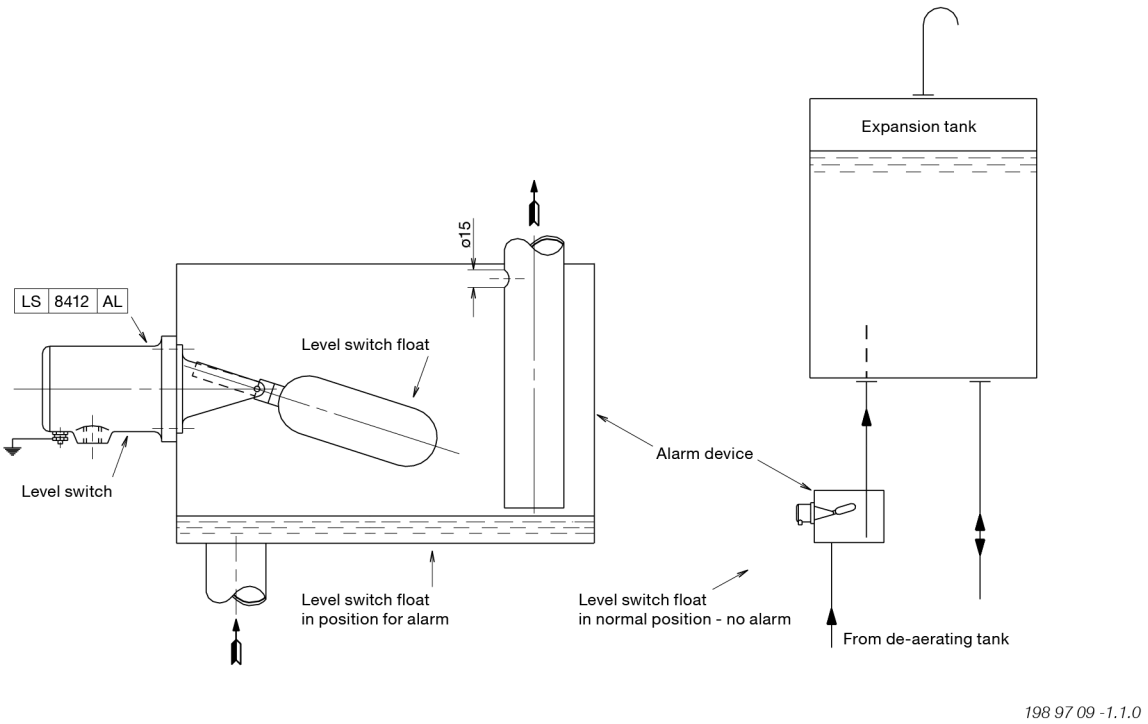

Fig. 12.02.02: De-aerating tank, alarm device

2025-06-23 - en

Chemical corrosion inhibitor and dosing tank

To ensure proper mixing of the inhibitor into the JCW system, the dosing tank must be designed to receive a small flow of JCW through the tank from the jacket water pumps. The tank must be suitable for mixing inhibitors in both powder and liquid form.

Recommended tank size	0.3 m^3
Design pressure	max. JCW system pressure
Suggested size inlet orifice	ø10 mm

Other dosing point options are available, besides the above dosing tank proposal. If the following requirements are met, it is possible to use the expansion tank.

- The expansion tank must be designed as an open tank towards the engine room
- A continuous small jacket water flow is established through the tank. This means that there is a pipe connection from the jacket water pump discharge side via the expansion tank to the suction side of the jacket water pump.

Preheater components

When the preheater system in Figure 12.01.05 is installed, the components must be specified as follows.

Preheater pump (optional)

The pump should be of the centrifugal type.

Pump flow rate	10% of the JCW flow, see 'CEAS report'
Working temperature	50-85°C
Max. working temperature	up to 100°C

Section 6.04 contains a guideline for selecting centrifugal pumps.

If a preheater pump is not installed, the preheater must be relocated, see Fig. 12.01.06.

Preheater

Heating flow rate	10% of the JCW flow, see 'CEAS report'
Heating capacity	see below
Preheater type	steam, thermal, oil, or electrical
Working temperature	50-85°C
Max. working temperature	up to 100°C
Max. pressure drop on jacket water side	~0.2 bar

2025-06-23 - en

The preheater heating capacity depends on the required preheating time and the required temperature increase of the engine jacket cooling water. Fig. 12.02.03 shows temperature and time relations. In general, a temperature increase of about 35°C (from 15°C to 50°C) is required, and a preheating time of 12 hours requires a preheater capacity of about 1% of the engine NMCR power.

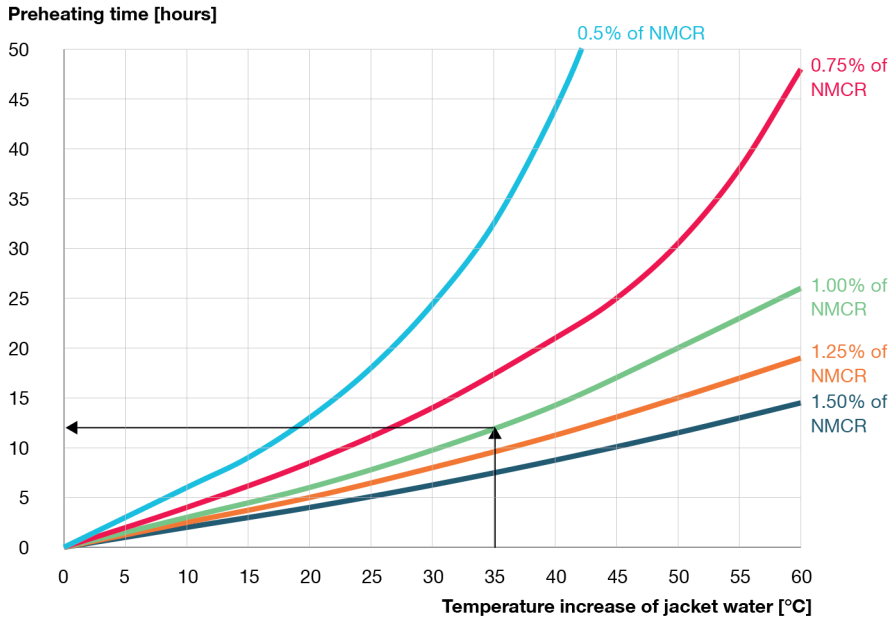

Fig. 12.02.03: Temperature increase and corresponding preheating time curves shown for different preheater sizes in percentage of engine nominal maximum continuous rating (NMCR) power

Freshwater generator installation

The CEAS report provides the engine heat energy available for freshwater production as a function of engine load (%SMCR).

Note that the heat energy specified in CEAS for the jacket water heat exchanger must not be used for dimensioning the freshwater generator.

Figs. 12.01.01–12.01.04 show freshwater generator installations.

2025-06-23 - en

Calculation of estimated freshwater production

For freshwater generators with either two-stage, or single-stage vacuum evaporators, the estimated freshwater production rate per day (M) can for guidance be calculated based on the available jacket cooling water heat for design purposes (Q_d) multiplied with a factor (K). To obtain a more precise freshwater production rate, consult the freshwater generator supplier.

$M = Q_d \times K$ (tonnes/24 hours)

Definition of Q_d:

The design heat used in the calculation can be selected in CEAS from the jacket water cooler heat column in the cooler capacities tables, as a function of the engine SMCR load in percentage. The design heat can be selected at, for example, normal continuous rating (NCR) engine load, but can also be selected at other percentages of SMCR load. When selecting the design heat from the table, it is important to use only 85% of the heat figure stated in CEAS to account for -15% uncertainty.

Factor K:

For a single-stage freshwater generator type, use the approx. K factor:	K ≈ 0.03
For a two-stage freshwater generator type, use the approx. K factor:	K ≈ 0.06

Example:

Engine type:	6G50ME-C9.6-LGIM LL-EGB
Rating SMCR:	7,600 kW at 84.4 r/min.
NCR at 85% SMCR:	6,460 kW at 79.9 r/min.
NCR jacket water heat (Q_d) according to CEAS tables:	1,080 kW

Calculation of M:

Estimated production rate for a single-stage freshwater generator:	1,080 x 0.85 x 0.03 ≈ 28 tonnes/24 hours
Estimated production rate for a two-stage freshwater generator:	1,080 x 0.85 x 0.06 ≈ 55 tonnes/24 hours

2025-06-23 - en

This page is intentionally left blank

2025-06-23 - en

Jacket cooling water pipes

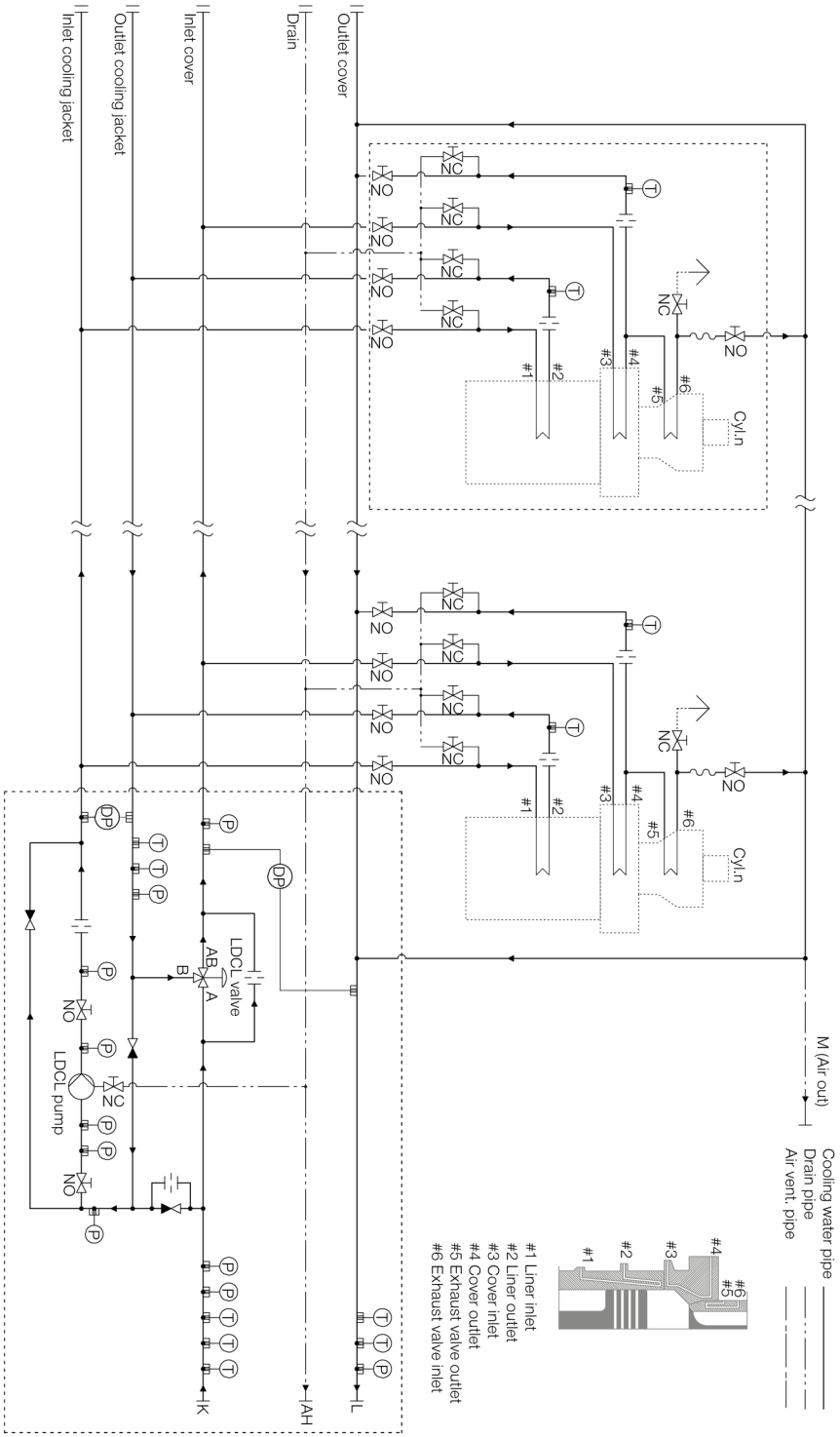

576 31 06-0.0.0

The letters refer to list of 'Counterflanges'
The item no. refer to 'Guidance values automation'

Fig.12.03.01: Jacket cooling water pipes

2025-03-25 - en

This page is intentionally left blank

2025-03-25 - en

01 Engine Design
02 Engine Layout and Load Diagrams, SFOC, dot 5
03 Turbocharger Selection & Exhaust Gas Bypass
04 Electricity Production
05 Installation Aspects
06 List of Capacities: Pumps, Coolers & Exhaust Gas
07 Fuel
08 Lubricating Oil
09 Cylinder Lubrication
10 Piston Rod Stuffing Box Drain Oil
11 Low-temperature Cooling Water
12 High-temperature Cooling Water
13 Starting and Control Air
14 Scavenge Air
15 Exhaust Gas
16 Engine Control System
17 Vibration Aspects
18 Monitoring Systems and Instrumentation
19 Dispatch Pattern, Testing, Spares and Tools
20 Project Support and Documentation
21 Appendix

This page is intentionally left blank

Starting and control air systems

The starting air of 30 bar is supplied by the starting air compressors to the starting air receivers and from these to the main engine inlet ‘A’.

Through a reduction station, filtered compressed air at 7 bar is supplied to the control air for exhaust valve air springs, through engine inlet ‘B’

Through a reduction valve, compressed air is supplied at approx. 7 bar to ‘AP’ for turbocharger cleaning (soft blast), and a minor volume used for the fuel valve testing unit. The specific air pressure required for turbocharger cleaning is subject to make and type of turbocharger.

Please note that the air consumption for control air, safety air, turbocharger cleaning, sealing air for exhaust valve, for fuel valve testing unit and venting of gas pipes are momentary requirements of the consumers.

The components of the starting and control air systems are further described in Section 13.02.

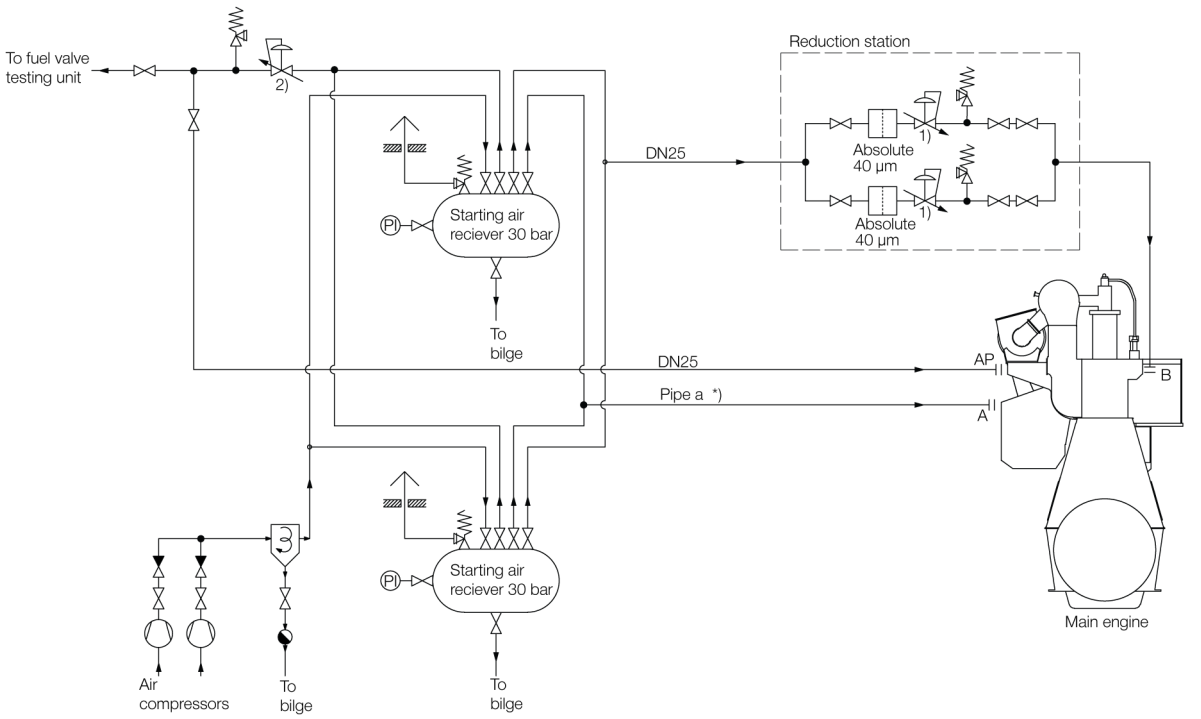

The letters refer to list of ‘Counterflanges’
*) Pipe a nominal dimension: DN150 mm

078 83 76-7.12.0

Fig. 13.01.01: Starting and control air systems

2025-03-25 - en

This page is intentionally left blank

Components for starting air system

Starting air compressors

The starting air compressors are to be of the water-cooled, two-stage type with intercooling.

More than two compressors may be installed to supply the total capacity stated.

Air intake quantity:
Reversible engine,
for 12 starts ..... see 'List of capacities'
Nonreversible engine,
for 6 starts ..... see 'List of capacities'
Delivery pressure ..... 30 bar

Starting air receivers

The volume of the two receivers is:
Reversible engine,
for 12 starts ..... see 'List of capacities' *)
Nonreversible engine,
for 6 starts ..... see 'List of capacities' *)
Working pressure ..... 30 bar
Test pressure ..... according to class rule

*) The volume stated is at 25°C and 1,000 mbar

Reduction station for control and safety air

In normal operating, each of the two lines supplies one engine inlet. During maintenance, three isolating valves in the reduction station allow one of the two lines to be shut down while the other line supplies both engine inlets, see Fig. 13.01.01.

Reduction.....from 30-10 bar to 7 bar (Tolerance ± 10%)

Flow rate, free air ..... 2,100 Normal liters/min equal to 0.035 m^3/s

Filter, fineness ..... 40 µm

Reduction valve for turbocharger cleaning etc

Reduction.....from, 30-10 bar to approx. 7 bar *)
*) Subject to make and type of TC (Tolerance ±10%)

Flow rate, free air.....2,600 Normal liters/min equal to 0.043 m^3/s

The consumption of compressed air for control air, exhaust valve air springs and safety air as well as air for turbocharger cleaning and fuel valve testing is covered by the capacities stated for air receivers and compressors in the list of capacities.

2024-11-15 - en

Starting and control air pipes

The piping delivered with and fitted onto the main engine is shown in the following figures in Section 13.03:

Fig. 13.03.01 Starting air pipes
Fig. 13.03.02 Air spring pipes, exhaust valves

Turning gear

The turning wheel has cylindrical teeth and is fitted to the thrust shaft. The turning wheel is driven by a pinion on the terminal shaft of the turning gear, which is mounted on the bedplate.

Engagement and disengagement of the turning gear is effected by displacing the pinion and terminal shaft axially. To prevent the main engine from starting when the turning gear is engaged, the turning gear is equipped with a safety arrangement which interlocks with the starting air system.

The turning gear is driven by an electric motor with a built-in gear and brake. Key specifications of the electric motor and brake are stated in Section 13.04.

2024-11-15 - en

Piping

The starting air pipes, Fig. 13.03.01, contain a main starting valve (a ball valve with actuator), a nonreturn valve, a solenoid valve and a starting valve. The main starting valve is controlled by the Engine Control System. Slow turning before start of engine, is included in the basic design.

The Engine Control System regulates the supply of control air to the starting valves in accordance with the correct firing sequence and the timing.

Please note that the air consumption for control air, turbocharger cleaning and for fuel valve testing unit are momentary requirements of the consumers. The capacities stated for the air receivers and compressors in the 'List of Capacities' cover all the main engine requirements and starting of the auxiliary engines.

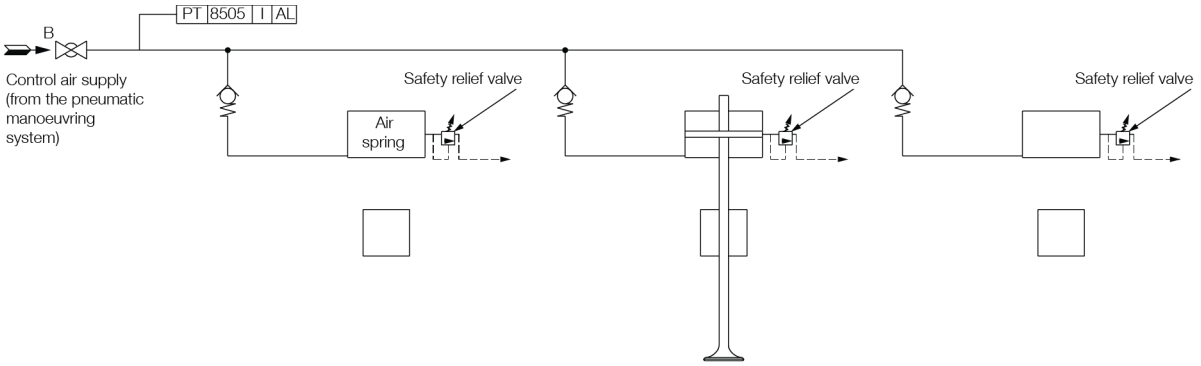

The item nos. refer to 'Guidance values automation'
The piping is delivered with and fitted onto the engine

517 15 68-2.1.1

Fig. 13.03.01: Starting air pipes

Exhaust valve air spring pipes

The exhaust valve is opened hydraulically by the Proportional Exhaust Valve Actuator (PEVA) valve, which is activated by the Engine Control System.

The closing force is provided by an 'air spring' which leaves the valve spindle free to rotate.

The compressed air is taken from the control air supply, see Fig. 13.03.02.

2025-03-25 - en

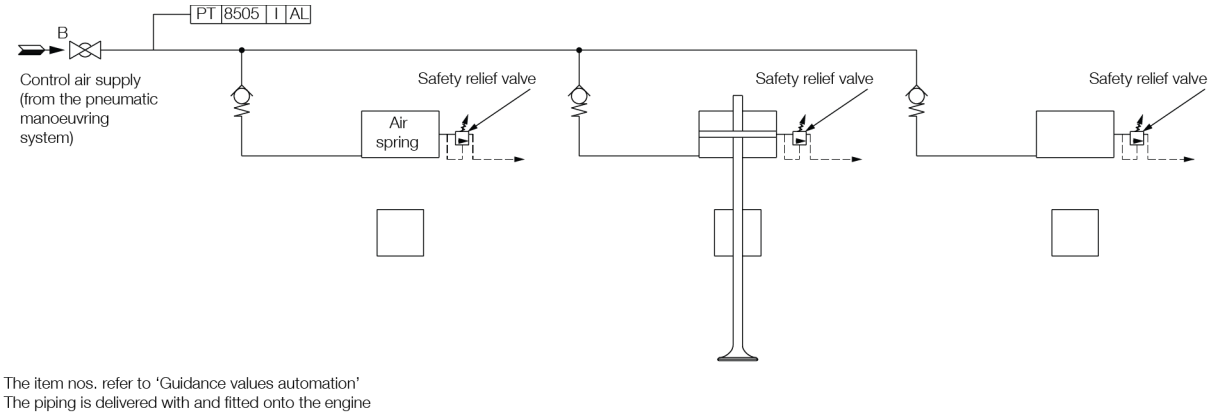

The item nos. refer to 'Guidance values automation'
The piping is delivered with and fitted onto the engine

Fig. 13.03.02: Air spring pipes for exhaust valves

2025-03-25 - en

Electric motor for turning gear

General

Everllence delivers a turning gear with built-in disc brake.

A turning gear with an electric motor of another protection or insulation class can be ordered. Information about the alternative executions is available on request.

Two basic executions are available for power supply frequencies of 60 and 50 Hz respectively. Nominal power and current consumption of the motors are listed below.

Electric motor and brake, voltage	3 x 380-415V
Electric motor and brake, frequency	50 Hz
Protection, electric motor and brake	IP 44
Insulation class	F

Number of cylinders	Electric motor	
	Nominal power, kW	Nominal current, A
5-6	5.5 - 4P	11.7

Electric motor and brake, voltage	3 x 440-480V
Electric motor and brake, frequency	60 Hz
Protection, electric motor and brake	IP 44
Insulation class	F

Number of cylinders	Electric motor	
	Nominal power, kW	Nominal current, A
5-6	6.6 - 4P	10.1

536 71 03-2.4.0

Table 13.04.01: Electric motor for turning gear.

This page is intentionally left blank

01 Engine Design
02 Engine Layout and Load Diagrams, SFOC, dot 5
03 Turbocharger Selection & Exhaust Gas Bypass
04 Electricity Production
05 Installation Aspects
06 List of Capacities: Pumps, Coolers & Exhaust Gas
07 Fuel
08 Lubricating Oil
09 Cylinder Lubrication
10 Piston Rod Stuffing Box Drain Oil
11 Low-temperature Cooling Water
12 High-temperature Cooling Water
13 Starting and Control Air
14 Scavenge Air
15 Exhaust Gas
16 Engine Control System
17 Vibration Aspects
18 Monitoring Systems and Instrumentation
19 Dispatch Pattern, Testing, Spares and Tools
20 Project Support and Documentation
21 Appendix

This page is intentionally left blank

Scavenge air system

Scavenge air is supplied to the engine by one or more turbochargers, located on the exhaust side of the engine.

The compressor of the turbocharger draws air from the engine room, through an air filter, and the compressed air is cooled by the scavenge air cooler, one per turbocharger. The scavenge air cooler is provided with a water mist catcher, which prevents condensate water from being carried with the air into the scavenge air receiver and to the combustion chamber.

The scavenge air system (see Figs. 14.01.01 and 14.02.01) is an integrated part of the main engine

The engine power figures and the data in the list of capacities are based on MCR at tropical conditions, i.e. a seawater temperature of 32°C, or freshwater temperature of 36°C, and an ambient air inlet temperature of 45°C.

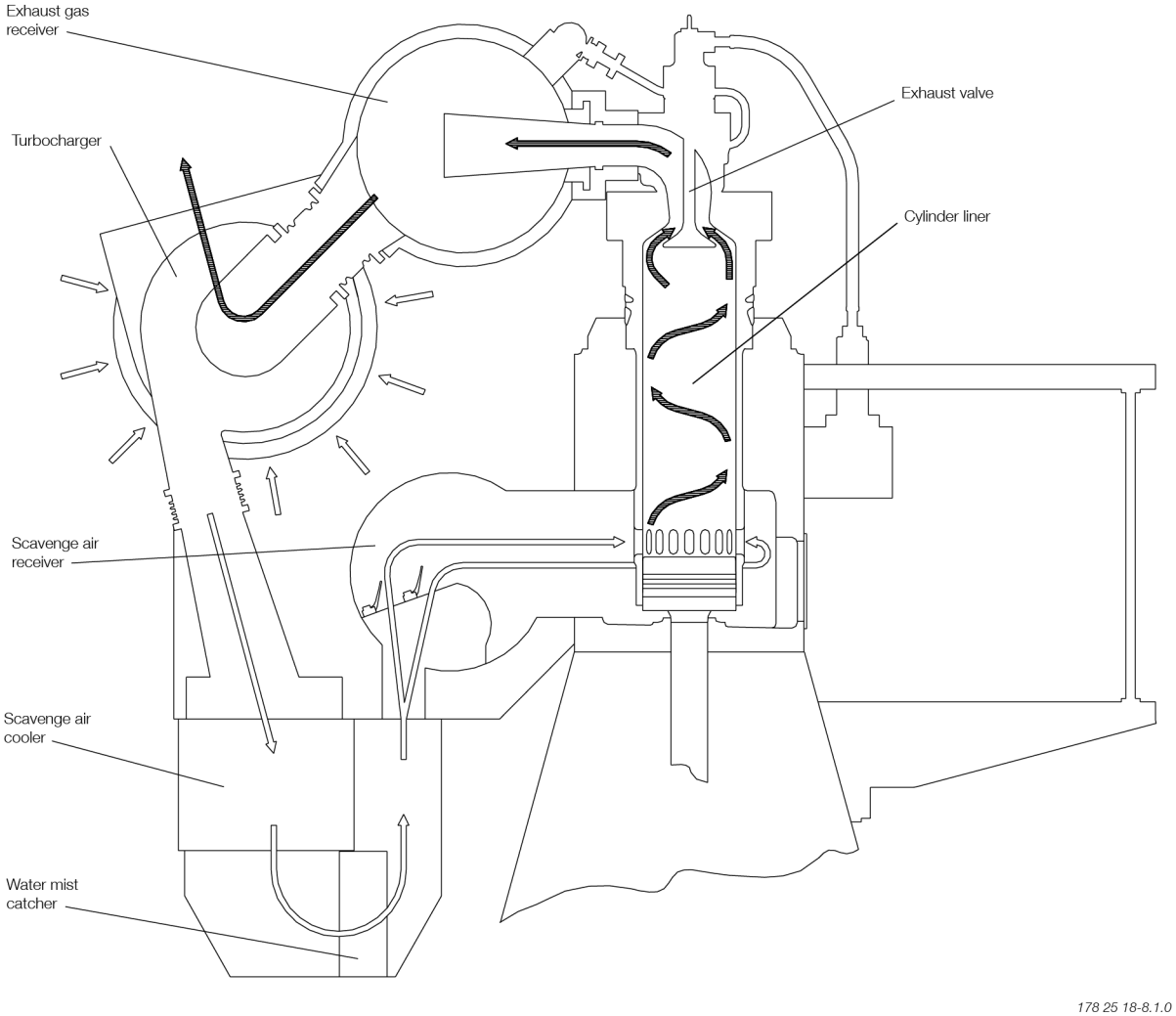

Fig. 14.01.01: Scavenge air system

2025-03-25 - en

This page is intentionally left blank

2025-03-25 - en

Auxiliary blowers

The engine is provided with a minimum of two electrically driven auxiliary blowers, the actual number depending on the number of cylinders as well as the turbocharger make and amount.

The auxiliary blowers are integrated in the reversing chamber below the scavenge air cooler. Between the scavenge air cooler and the scavenge air receiver, non-return valves are fitted which close automatically when the auxiliary blowers start supplying the scavenge air.

Auxiliary blower operation

The auxiliary blowers start operating consecutively before the engine is started and will ensure complete scavenging of the cylinders in the starting phase, thus providing the best conditions for a safe start.

During operation of the engine, the auxiliary blowers will start automatically whenever the blower inlet pressure drops below a preset pressure, corresponding to an engine load of approximately 25-35%.

The blowers will continue to operate until the blower inlet pressure again exceeds the preset pressure plus an appropriate hysteresis (i.e. taking recent pressure history into account), corresponding to an engine load of approximately 30-40%.

Emergency running

If one of the auxiliary blowers is out of function, the other auxiliary blower will function in the system, without any manual adjustment of the valves being necessary.

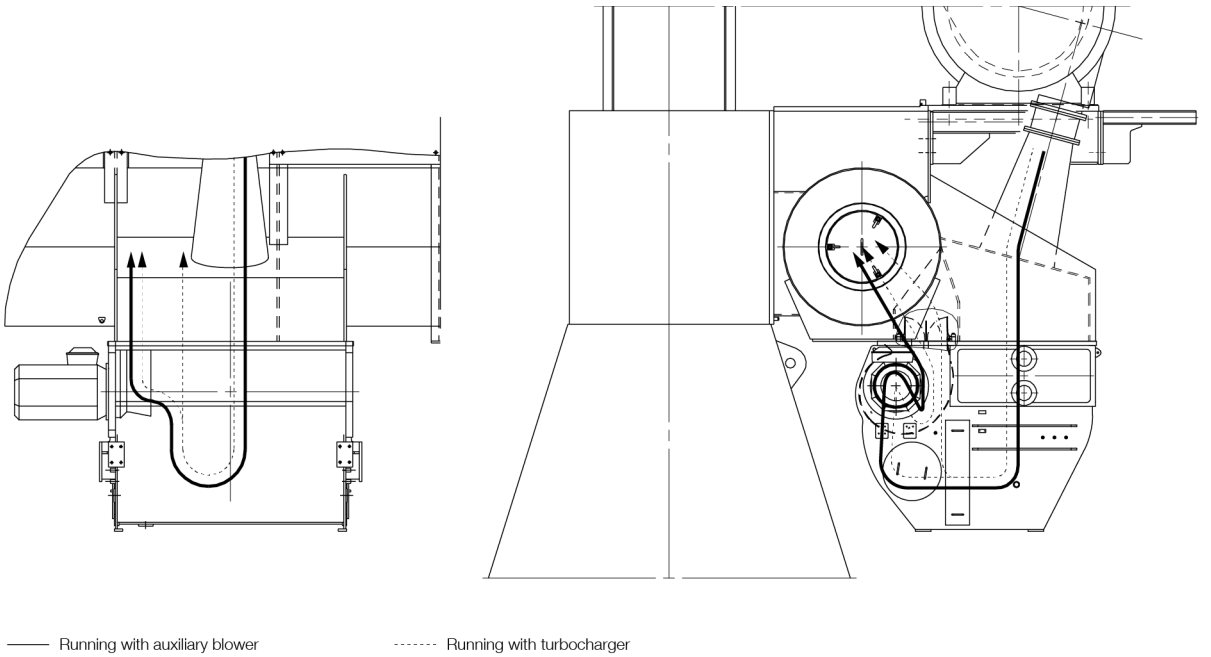

Fig. 14.02.01: Scavenge air system, integrated blower

2025-06-18 - en

Control of the auxiliary blowers

The control system for the auxiliary blowers is integrated in the Engine Control System. The auxiliary blowers can be controlled in either automatic (default) or manual mode.

In automatic mode, the auxiliary blowers are started sequentially at the moment the engine is commanded to start. During engine running, the blowers are started and stopped according to preset scavenge air pressure limits.

When the engine stops, the blowers are stopped after 30 minutes to prevent overheating of the blowers. When a start is ordered, the blower will be started in the normal sequence and the actual start of the engine will be delayed until the blowers have started.

In manual mode, the blowers can be controlled individually from the ECR (Engine Control Room) panel irrespective of the engine condition.

Referring to Fig. 14.02.02, the Auxiliary Blower Starter Panels control and protect the Auxiliary Blower motors, one panel with starter per blower.

The starter panels with starters for the auxiliary blower motors are not included, they can be ordered as an option. (The starter panel design and function is according to Everllence's diagram, however, the physical layout and choice of components has to be decided by the manufacturer).

Heaters for the blower motors are available as an option.

Scavenge air cooler requirements

The data for the scavenge air cooler is specified in the description of the cooling water system chosen.

For further information, please refer to our publication titled: *Everllence Influence of Ambient Temperature Conditions*

The publication is available at everllence.com/marine → 'Two-Stroke' → 'Technical Papers'.

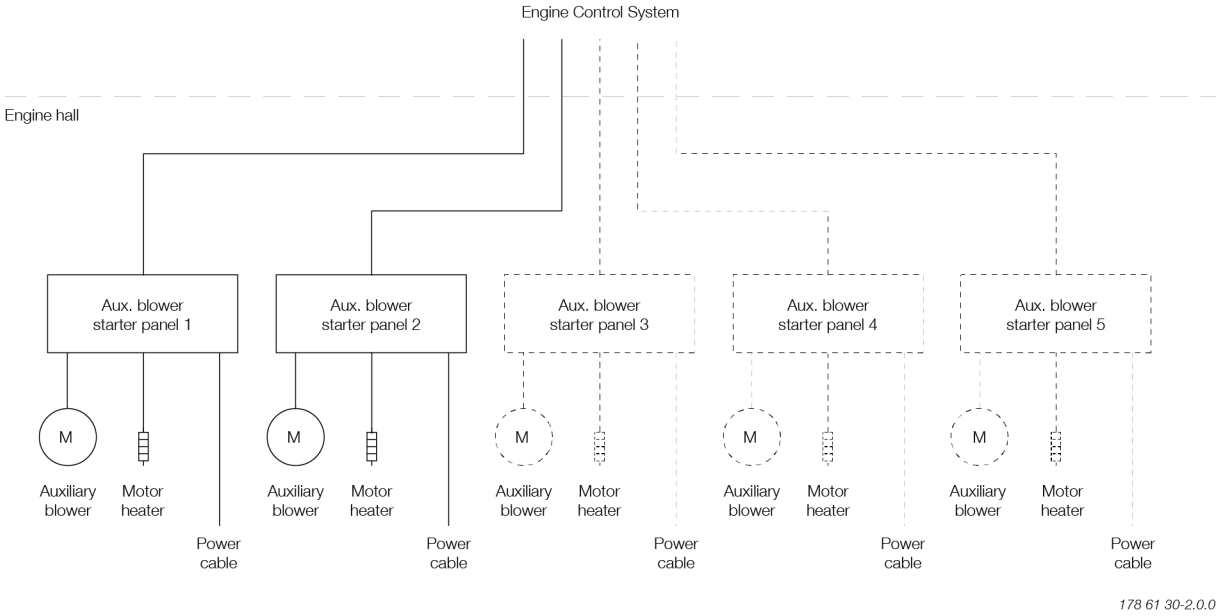

Fig. 14.02.02: Diagram of auxiliary blower control system

Scavenge air pipes

The item No. refer to ‘Guidance Values Automation’

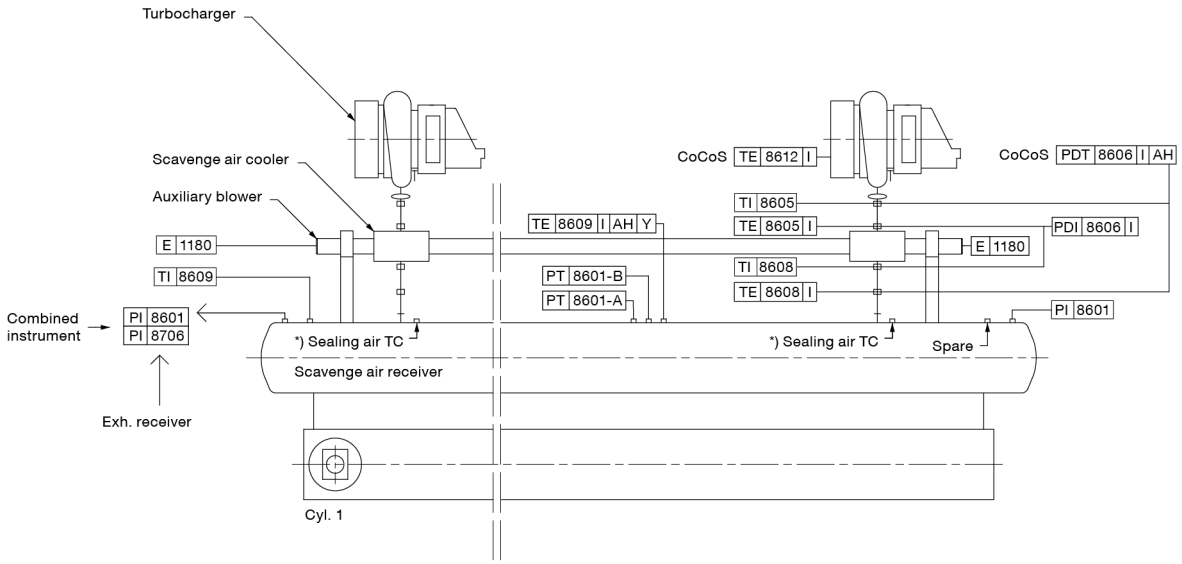

525 11 86-5.0.1

*) Option, see Figs. 15.02.03 and 15.02.04: Soft blast cleaning of turbine side

Fig. 14.03.01: Scavenge air pipes

2025-03-12 - en

This page is intentionally left blank

Electric motor for auxiliary blower

General

The number of auxiliary blowers in a propulsion plant may vary depending on the actual amount of turbochargers as well as space requirements.

Motor start method and size

Direct Online Start (DOL) is required for all auxiliary blower electric motors to ensure proper operation under all conditions.

For typical engine configurations, the installed size of the electric motors for auxiliary blowers are listed in Table 14.04.01.

Special operating conditions

For engines with Dynamic Positioning (DP) mode in manoeuvring system, larger electric motors are required. This is in order to avoid start and stop of the blowers inside the load range specified for dynamic positioning. The actual load range is to be decided between the owner and the yard.

Engine plants with waste heat recovery exhaust gas bypass and engines with low-and part-load exhaust gas bypass may require less blower capacity, please contact Everllence, Copenhagen.

Number of Cylinder	Number of Turbocharger	Number of Auxiliary Blower	Installed Power/ Blower kW
5	1	2	65
6	1	2	75
6	2	2	75
7	1	2	90
7	2	2	90
8	2	2	90

The installed power of the electric motors are based on a voltage supply of 3x440V at 60Hz.

The electric motors are delivered with and fitted onto the engine.

Table 14.04.01: Electric motor for auxiliary blower

2025-06-18 - en

This page is intentionally left blank

Scavenge air cooler cleaning system

General

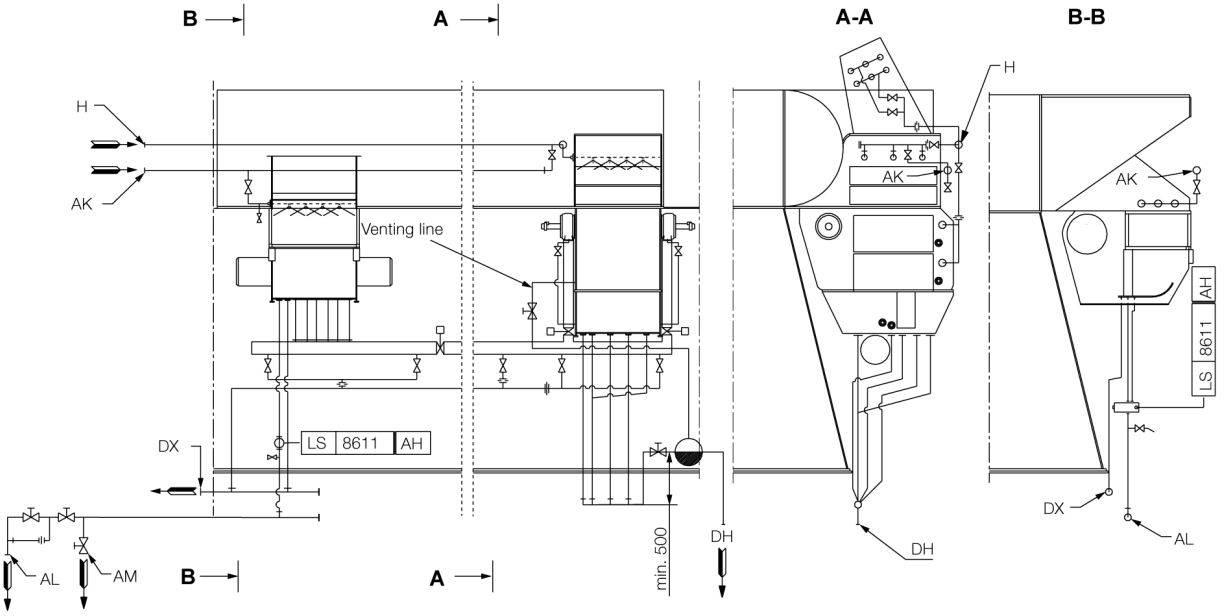

The letters refer to list of 'Counterflanges'. The item nos. refer to 'Guidance values automation'.

Fig. 14.05.01: Air cooler cleaning pipes, two or more air coolers, for EGR

The air side of the scavenge air cooler can be cleaned by injecting a grease dissolving media through ‘AK’ to a spray pipe arrangement fitted to the air chamber above the air cooler element.

Drain from water mist catcher

Sludge is drained through ‘AL’ to the drain water collecting tank and the polluted grease dissolvent returns from ‘AM’, through a filter, to the chemical cleaning tank. The cleaning must be carried out while the engine is at standstill.

Dirty water collected after the water mist catcher is drained through ‘DX’ and led to the bilge tank via an open funnel, see Fig. 14.05.02.

The ‘AL’ drain line is, during running, used as a permanent drain from the air cooler water mist catcher. The water is led through an orifice to prevent major losses of scavenge air.

The system is equipped with a drain box with a level switch, indicating any excessive water level.

The piping delivered with and fitted on the engine is shown in Fig 14.05.01.

Auto pump overboard system

It is common practice on board to lead drain water directly overboard via an intermediate collecting tank. Before pumping the drain water overboard, it is required to measure the oil content in the water, and if above 15ppm, then lead it to oily bilge water holding tank.

If required by the owner, a system for automatic disposal of drain water with oil content monitoring could be built as outlined in Fig. 14.05.02.

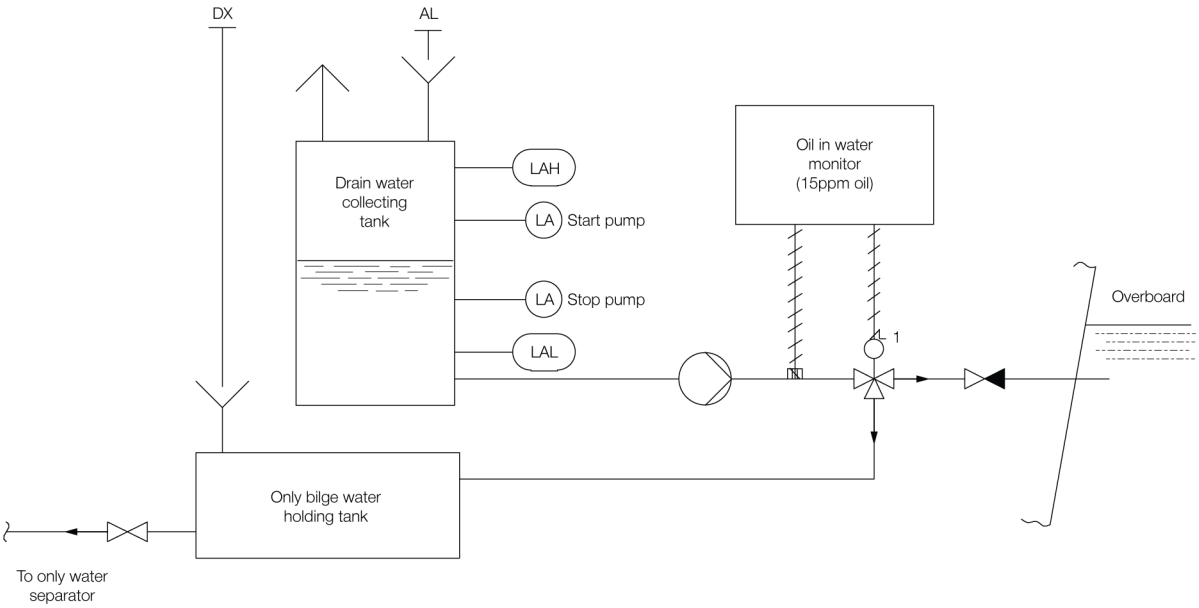

079 21 94-1.10.0a

The letters refer to list of 'Counterflanges'.

Fig. 14.05.02: Suggested automatic disposal of drain water, if required by owner

Air cooler cleaning unit

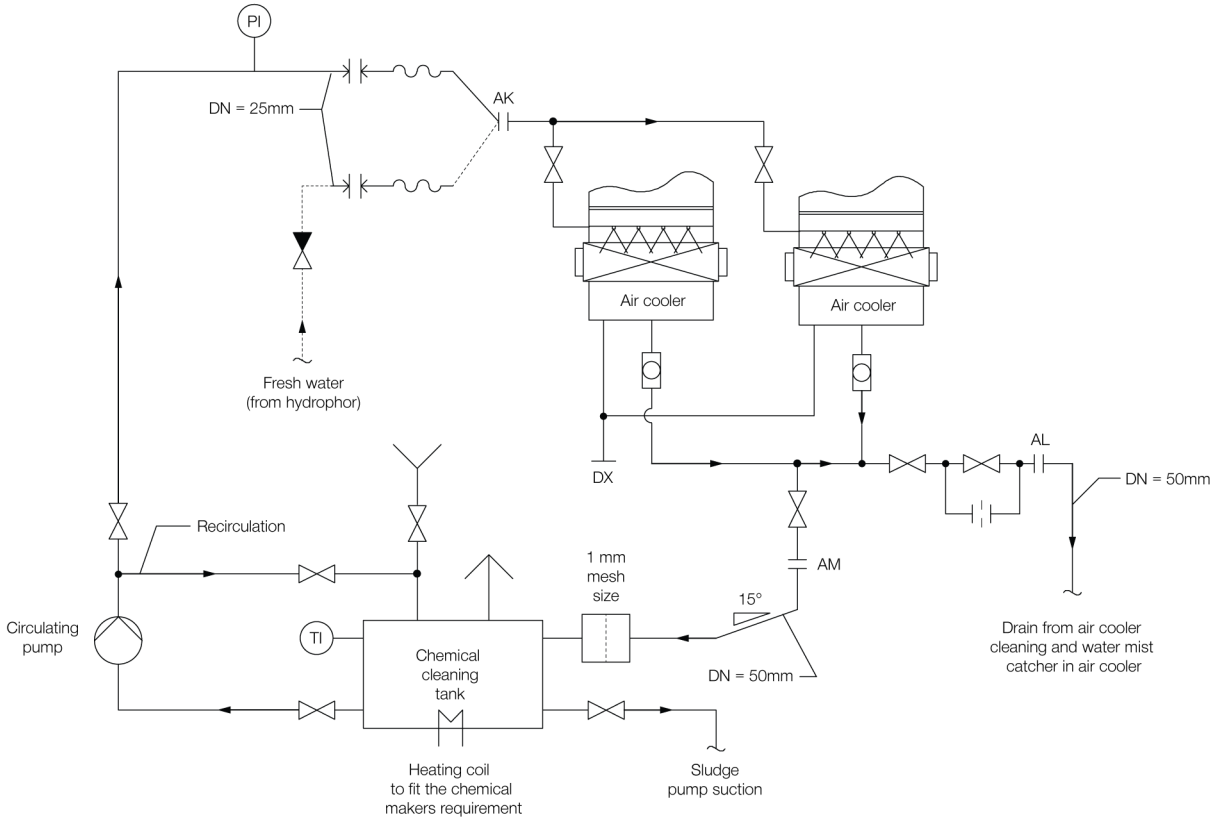

079 21 94-1.10.0a

Engine type	No. of cylinders	Chemical tank capacity, m^3	Circulation pump capacity at 3 bar, m^3/h
S60ME-C	4-5	0.3	1
	6-8	0.6	2
G60ME-C	4-5	0.3	1
	6-8	0.6	2
G70ME-C	4-7	0.6	2
G80ME-C	6-7	0.6	2
G95ME-C	6-8	0.9	3
	9-12	1.5	5

Fig. 14.05.03: Air cooler cleaning system with air cooler cleaning unit.

This page is intentionally left blank

Scavenge air box drain system

The scavenge air box is continuously drained through 'AV' to a small pressurised drain tank, from where the sludge is led to the sludge tank. Steam can be applied through 'BV', if required, to facilitate the draining. See Fig. 14.06.01.

The continuous drain from the engine scavenge air area must not be directly connected to the sludge tank due to the pressure level.

The drain tank shall be designed according to the pressurised system connected to the BV connection as one of the following:

- Steam maximum working pressure
- Compressed air maximum working pressure

It is recommended that the drain tank is placed close to the engine to avoid lon piping between engine and drain tank and thereby minimize the risk of the pipe being blocked by sludge.

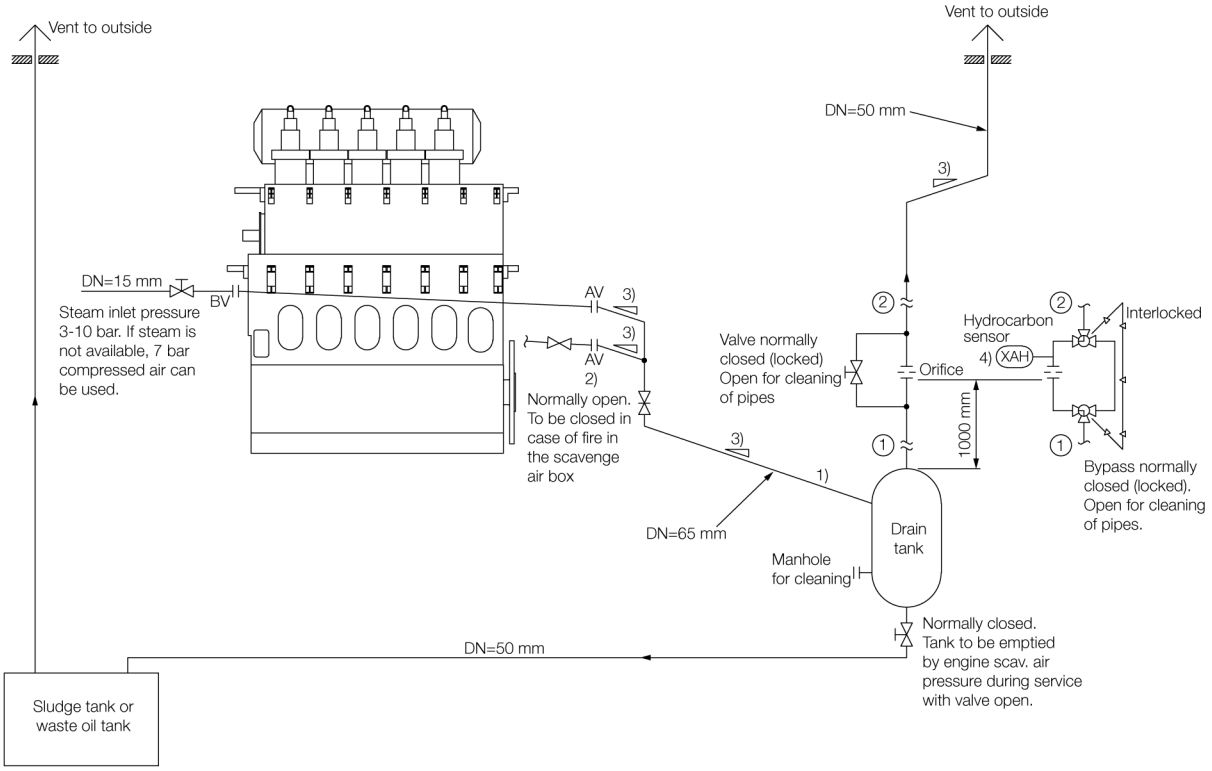

The letters refer to list of 'Counterflanges'

No. of cylinders:	5-6	7-9	10-12	14
Drain tank capacity, m^3	0.5	0.7	0.9	1.1

079 61 03-0.9.0

Fig. 14.06.01: Scavenge air box drain system

2021-10-12 - en

This page is intentionally left blank

2021-10-12 - en

Fire extinguishing systems for scavenge air space

Fire in a scavenge air space can be extinguished by steam, which is the basic solution, or, optionally, by water mist or CO_2.

Fig. 14.07.01 shows the external part of the extinguishing system, pipe and flange connections.

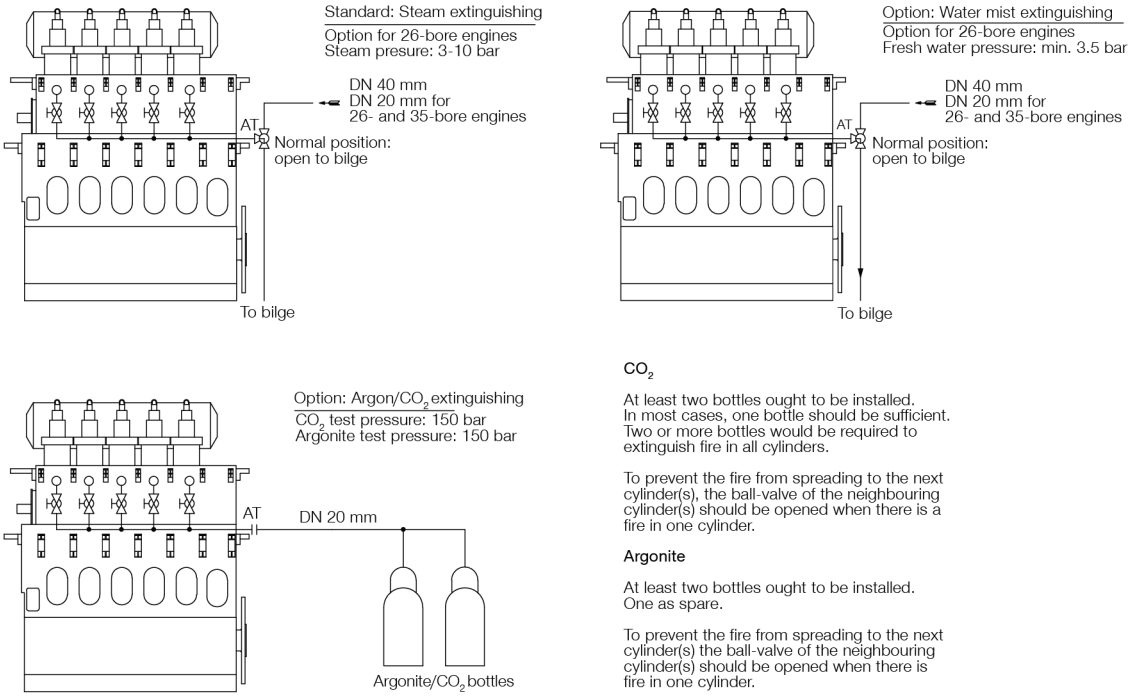

Fig. 14.07.01: Fire extinguishing system for scavenge air space

The key specifications of the fire extinguishing agents are:

Steam fire extinguishing system for scavenge air space

Steam pressure:	3-10 bar
Steam quantity, approx.:	4.3 kg/cyl.

Water mist fire extinguishing system for scavenge air space

Freshwater pressure:	min. 3.5 bar
Freshwater quantity, approx.:	3.4 kg/cyl.

CO_2 fire extinguishing system for scavenge air space

CO_2 test pressure:	150 bar
CO_2 quantity, approx.:	8.5 kg/cyl.

On the next figures, letters refer to 'List of flanges' and item numbers refer to 'Guidance valve automation'.

2024-05-29 - en

Fire extinguishing and drain pipes in scavenge air space

Fig. 14.07.02 shows fire extinguishing pipes on the engine.

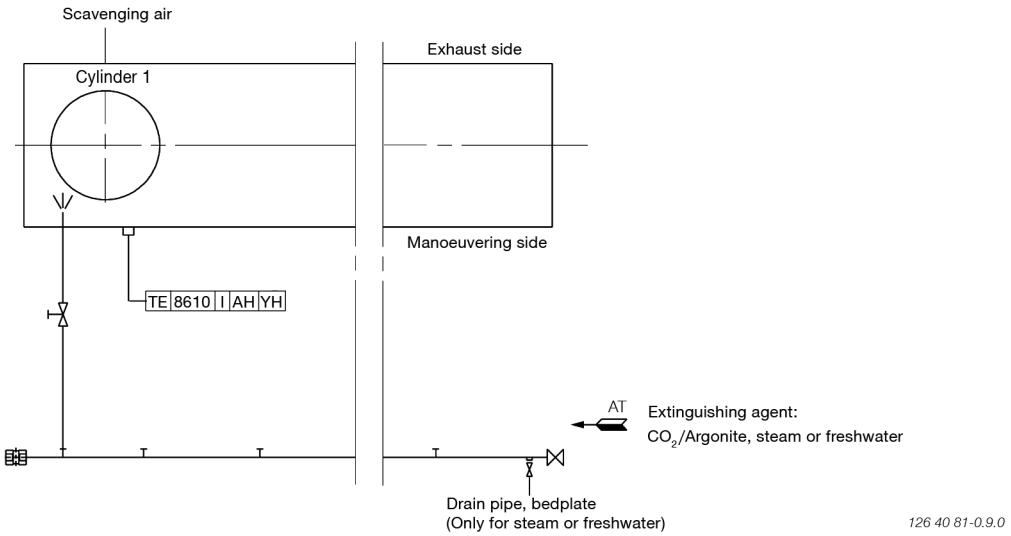

Fig. 14.07.02: Fire extinguishing pipes in scavenge air space

Fig. 14.07.03 shows drain pipes in the scavenge air space.

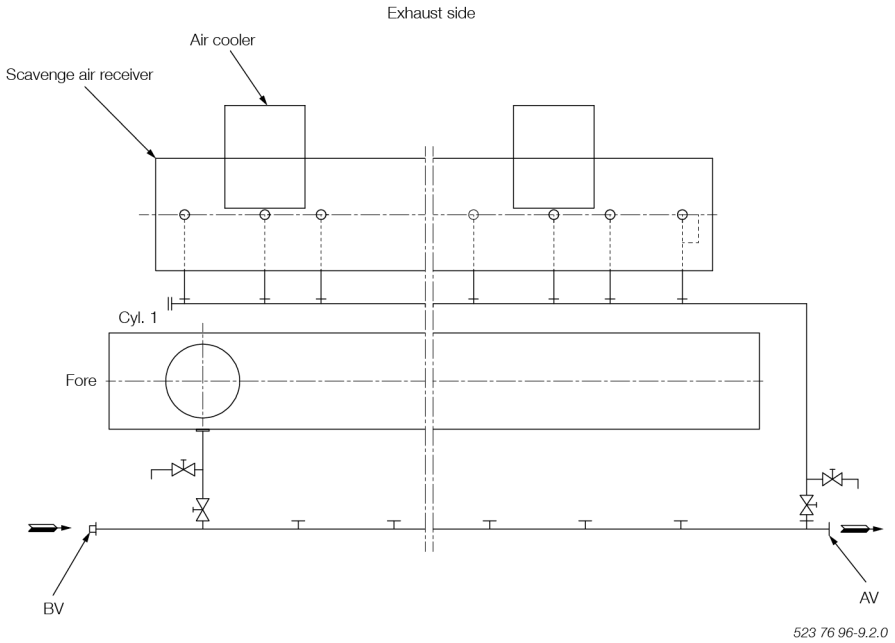

Fig. 14.07.03 Scavenge air space, drain pipes

2024-05-29 - en

01 Engine Design
02 Engine Layout and Load Diagrams, SFOC, dot 5
03 Turbocharger Selection & Exhaust Gas Bypass
04 Electricity Production
05 Installation Aspects
06 List of Capacities: Pumps, Coolers & Exhaust Gas
07 Fuel
08 Lubricating Oil
09 Cylinder Lubrication
10 Piston Rod Stuffing Box Drain Oil
11 Low-temperature Cooling Water
12 High-temperature Cooling Water
13 Starting and Control Air
14 Scavenge Air
15 Exhaust Gas
16 Engine Control System
17 Vibration Aspects
18 Monitoring Systems and Instrumentation
19 Dispatch Pattern, Testing, Spares and Tools
20 Project Support and Documentation
21 Appendix

This page is intentionally left blank

Exhaust gas system

The exhaust gas is led from the cylinders to the exhaust gas receiver where the fluctuating pressures from the cylinders are equalised and from where the gas is led further on to the turbocharger at a constant pressure. See fig. 15.01.01.

Compensators are fitted between the exhaust valve housings and the exhaust gas receiver and between the receiver and the turbocharger. A protective grating is placed between the exhaust gas receiver and the turbocharger. The turbocharger is fitted with a pick-up for monitoring and remote indication of the turbocharger speed.

The exhaust gas receiver and the exhaust pipes are provided with insulation, covered by steel plating

Turbocharger arrangement and cleaning system

The turbochargers are located on the exhaust side of the engine.

The engine is designed for the installation of the Everllence turbocharger type TCA, Accelleron turbocharger type A-L,or MHI turbocharger type MET.

All makes of turbochargers are fitted with an arrangement for water washing of the compressor side, and soft blast cleaning of the turbine side, see Figs. 15.02.02, 15.02.03 and 15.02.04. Washing of the turbine side is only applicable on Everllence turbochargers, though not for dual fuel engines.

2025-06-18 - en

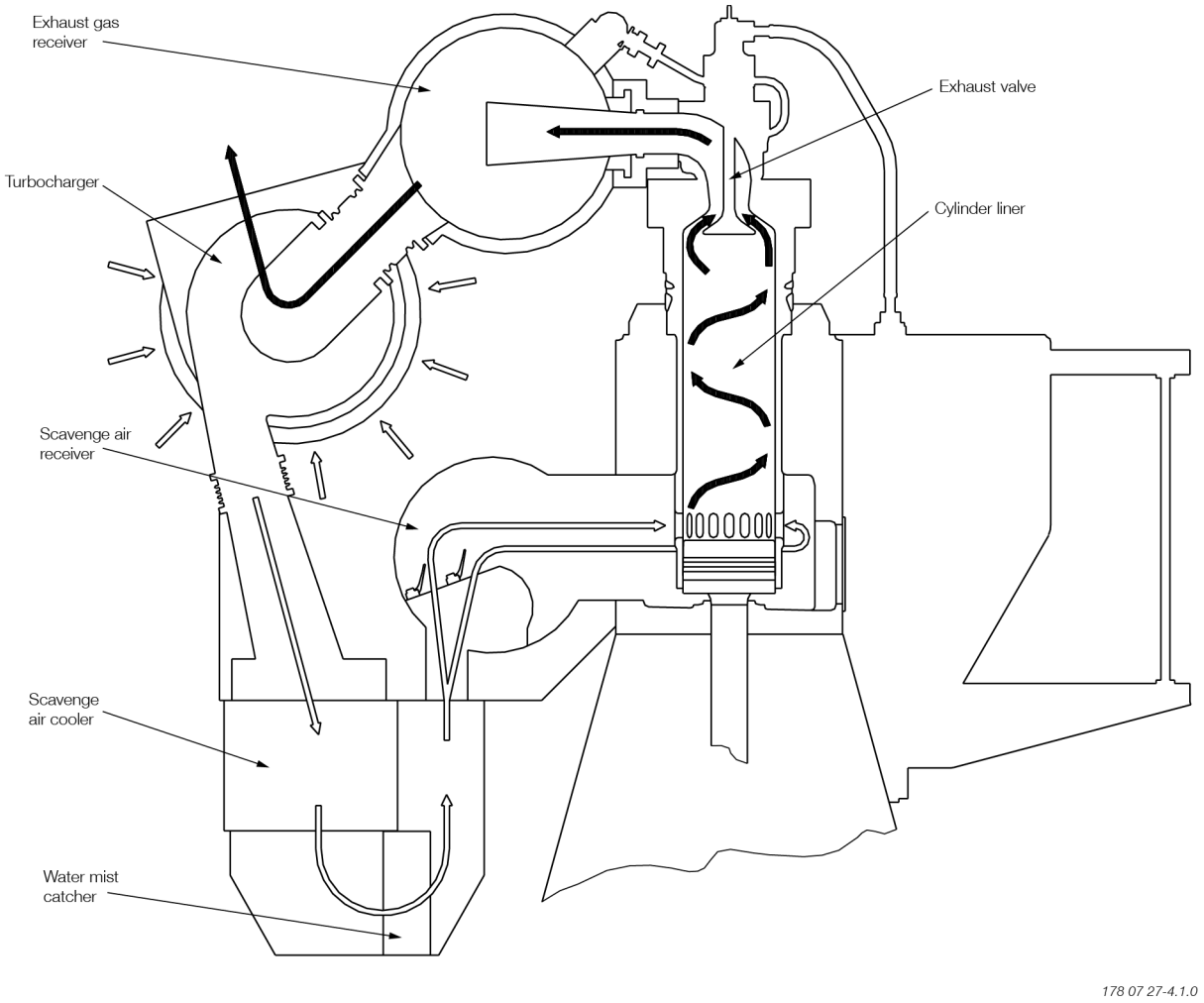

Fig. 15.01.01: Exhaust gas system on engine

2025-06-18 - en

Piping and cleaning systems

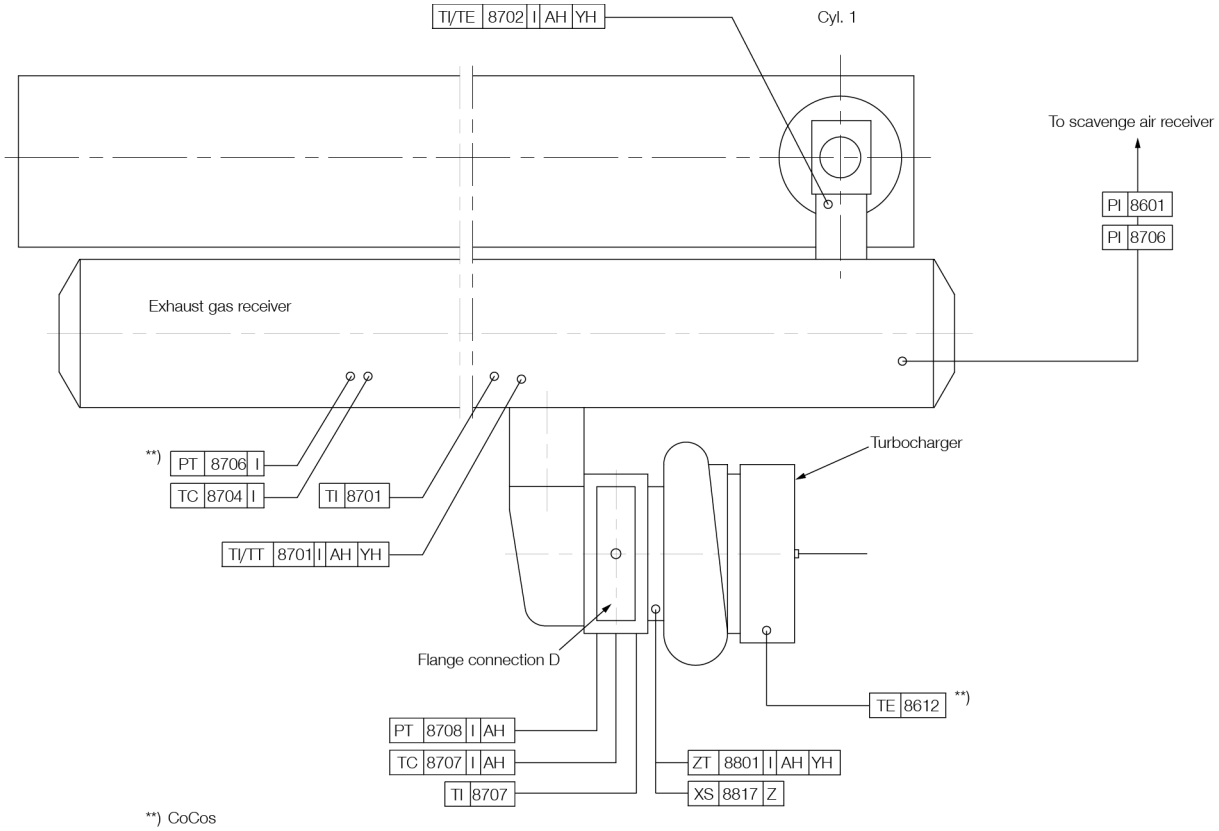

Fig. 15.02.01: Exhaust gas pipes

Cleaning systems

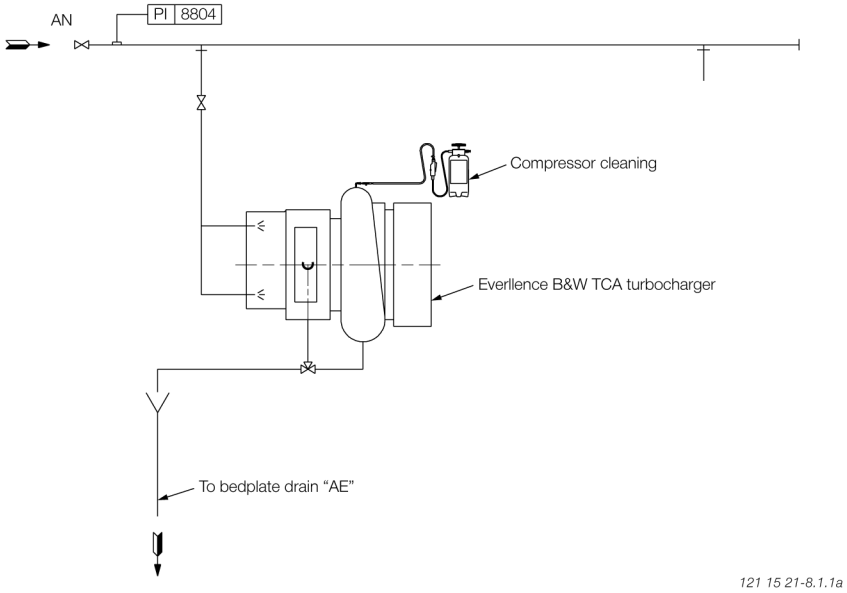

Fig. 15.02.02: Everllence TCA turbocharger, water washing of turbine side

2025-10-09 - en

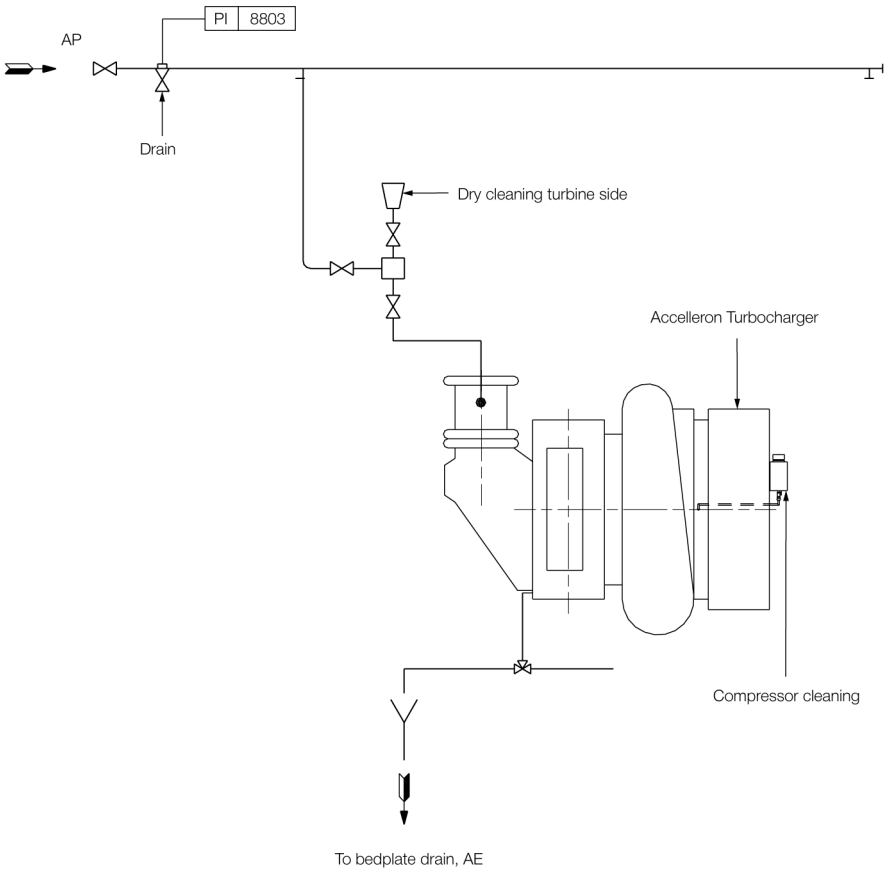

178 61 87-7.0.0

Fig. 15.02.03: Soft blast cleaning of turbine side and water washing of compressor side for Accelleron turbochargers

Soft blast cleaning systems

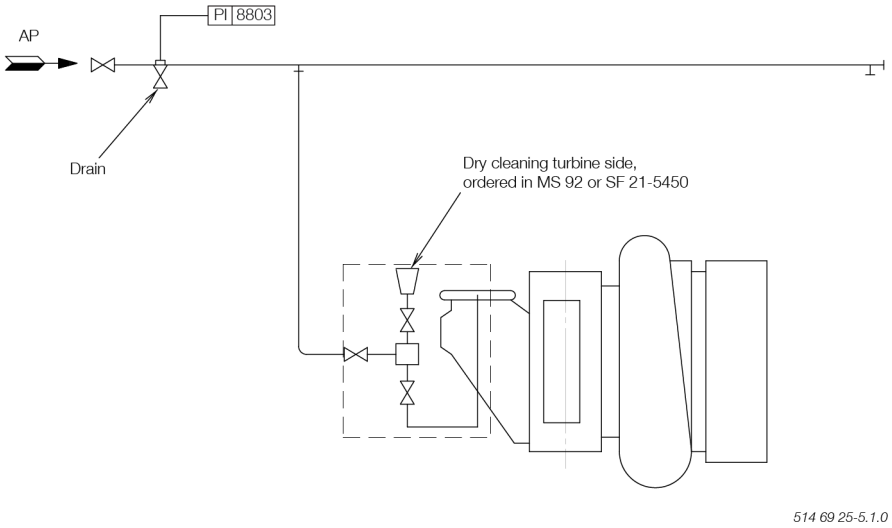

514 69 25-5.1.0

Fig. 15.02.04: Soft blast cleaning of turbine side, basic

Exhaust gas system for main engine

At the specified MCR of the engine, the total back-pressure in the exhaust gas system after the turbocharger (as indicated by the static pressure measured in the piping after the turbocharger) must not exceed 350 mm WC (0.035 bar).

In order to have a back-pressure margin for the final system, it is recommended at the design stage to initially use a value of about 300 mm WC (0.030 bar).

The actual back-pressure in the exhaust gas system at specified MCR depends on the gas velocity, i.e. it is proportional to the square of the exhaust gas velocity, and hence inversely proportional to the pipe diameter to the 4th power. It has by now become normal practice in order to avoid too much pressure loss in the pipings to have an exhaust gas velocity at specified MCR of about 35 m/sec, but not higher than 50 m/sec.

For dimensioning of the external exhaust pipe connections, see the exhaust pipe diameters for 35 m/sec, 40 m/sec, 45 m/sec and 50 m/sec respectively, shown in Table 15.07.02.

As long as the total back-pressure of the exhaust gas system (incorporating all resistance losses from pipes and components) complies with the above-mentioned requirements, the pressure losses across each component may be chosen independently, see proposed measuring points (M) in Fig. 15.05.01. The general design guidelines for each component, described below, can be used for guidance purposes at the initial project stage.

Exhaust gas piping system for main engine

The exhaust gas piping system conveys the gas from the outlet of the turbocharger(s) to the atmosphere.

The exhaust piping is shown schematically in Fig. 15.04.01.

The exhaust system for the main engine comprises:

- Exhaust gas pipes
- Exhaust gas boiler
- Silencer
- Spark arrester (if needed)
- Expansion joints (compensators)
- Pipe bracings.

In connection with dimensioning the exhaust gas piping system, the following parameters must be observed:

- Exhaust gas flow rate
- Exhaust gas temperature at turbocharger outlet
- Maximum pressure drop through exhaust gas system
- Maximum noise level at gas outlet to atmosphere
- Maximum force from exhaust piping on turbocharger(s)
- Sufficient axial and lateral elongation ability of expansion joints
- Utilisation of the heat energy of the exhaust gas.

2025-03-25 - en

Items that are to be calculated or read from tables are:

- Exhaust gas mass flow rate, temperature and maximum back pressure at turbocharger gas outlet
- Diameter of exhaust gas pipes
- Utilisation of the exhaust gas energy
- Attenuation of noise from the exhaust pipe outlet
- Pressure drop across the exhaust gas system
- Expansion joints.

2025-03-25 - en

System components

Exhaust gas compensator after turbocharger

When dimensioning the compensator for the expansion joint on the turbocharger gas outlet transition piece, the exhaust gas piece and components, are to be so arranged that the thermal expansions are absorbed by expansion joints. The heat expansion of the pipes and the components is to be calculated based on a temperature increase from 20°C to 250°C. The max. expected vertical, transversal and longitudinal heat expansion of the engine measured at the top of the exhaust gas transition piece of the turbocharger outlet are indicated in Fig. 15.06.01 and Table 15.06.01 as DA, DB and DC.

The movements stated are related to the engine seating, for DC, however, to the engine centre. The figures indicate the axial and the lateral movements related to the orientation of the expansion joints.

The expansion joints are to be chosen with an elasticity that limits the forces and the moments of the exhaust gas outlet flange of the turbocharger as stated for each of the turbocharger makers in Table 15.06.02. The orientation of the maximum permissible forces and moments on the gas outlet flange of the turbocharger is shown in Fig. 15.06.02.

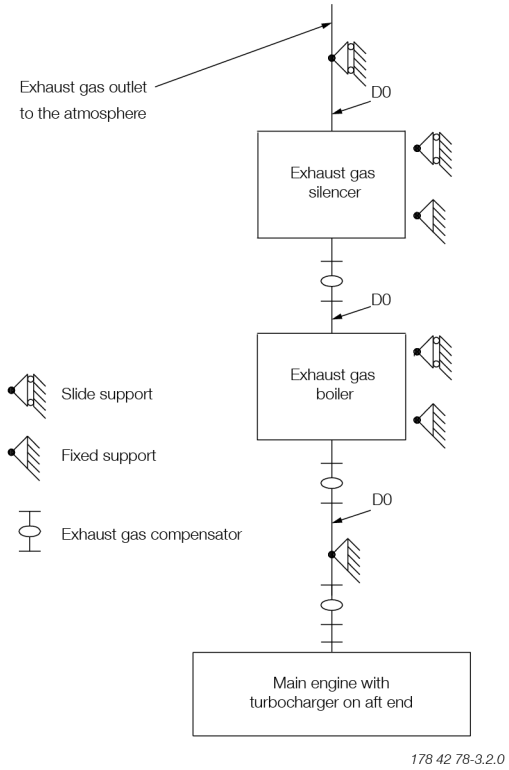

Fig. 15.04.01a: Exhaust gas system, one turbocharger

Exhaust gas boiler

Engine plants are usually designed for utilisation of the heat energy of the exhaust gas for steam production or for heating the thermal oil system. The exhaust gas passes an exhaust gas boiler which is usually placed near the engine top or in the funnel.

It should be noted that the exhaust gas temperature and flow rate are influenced by the ambient conditions, for which reason this should be considered when the exhaust gas boiler is planned. At specified MCR, the maximum recommended pressure loss across the exhaust gas boiler is normally 150 mm WC.

This pressure loss depends on the pressure losses in the rest of the system as mentioned above. Therefore, if an exhaust gas silencer/spark arrester is not installed, the acceptable pressure loss across the boiler may be somewhat higher than the max. of 150 mm WC, whereas, if an exhaust gas silencer/spark arrester is installed, it may be necessary to reduce the maximum pressure loss.

The above mentioned pressure loss across the exhaust gas boiler must include the pressure losses from the inlet and outlet transition pieces.

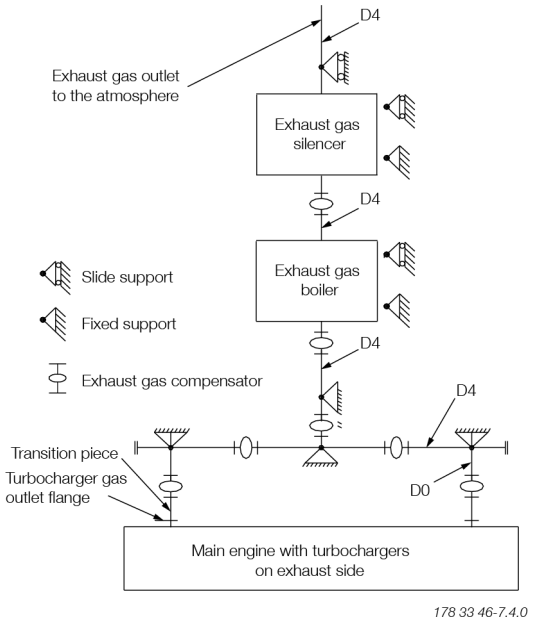

Fig. 15.04.01b: Exhaust gas system, two or more TCs

2025-03-12 - en

Exhaust Gas Silencer

The typical octave band sound pressure levels from the diesel engine's exhaust gas system at a distance of one meter from the top of the exhaust gas uptake are shown in Fig.15.04.02.

The need for an exhaust gas silencer can be decided based on the requirement of a maximum permissible noise level at a specific position.

The exhaust gas noise data is valid for an exhaust gas system without boiler and silencer, etc.

The noise level is at nominal MCR at a distance of one metre from the exhaust gas pipe outlet edge at an angle of 30° to the gas flow direction.

For each doubling of the distance, the noise level will be reduced by about 6 dB (far-field law).

When the noise level at the exhaust gas outlet to the atmosphere needs to be silenced, a silencer can be placed in the exhaust gas piping system after the exhaust gas boiler.

The exhaust gas silencer is usually of the absorption type and is dimensioned for a gas velocity of approximately 35 m/s through the central tube of the silencer.

An exhaust gas silencer can be designed based on the required damping of noise from the exhaust gas given on the graph.

In the event that an exhaust gas silencer is required this depends on the actual noise level requirement on the bridge wing, which is normally maximum 60-70 dB(A) a simple flow silencer of the absorption type is recommended. Depending on the manufacturer, this type of silencer normally has a pressure loss of around 20 mm WC at specified MCR.

2025-03-12 - en

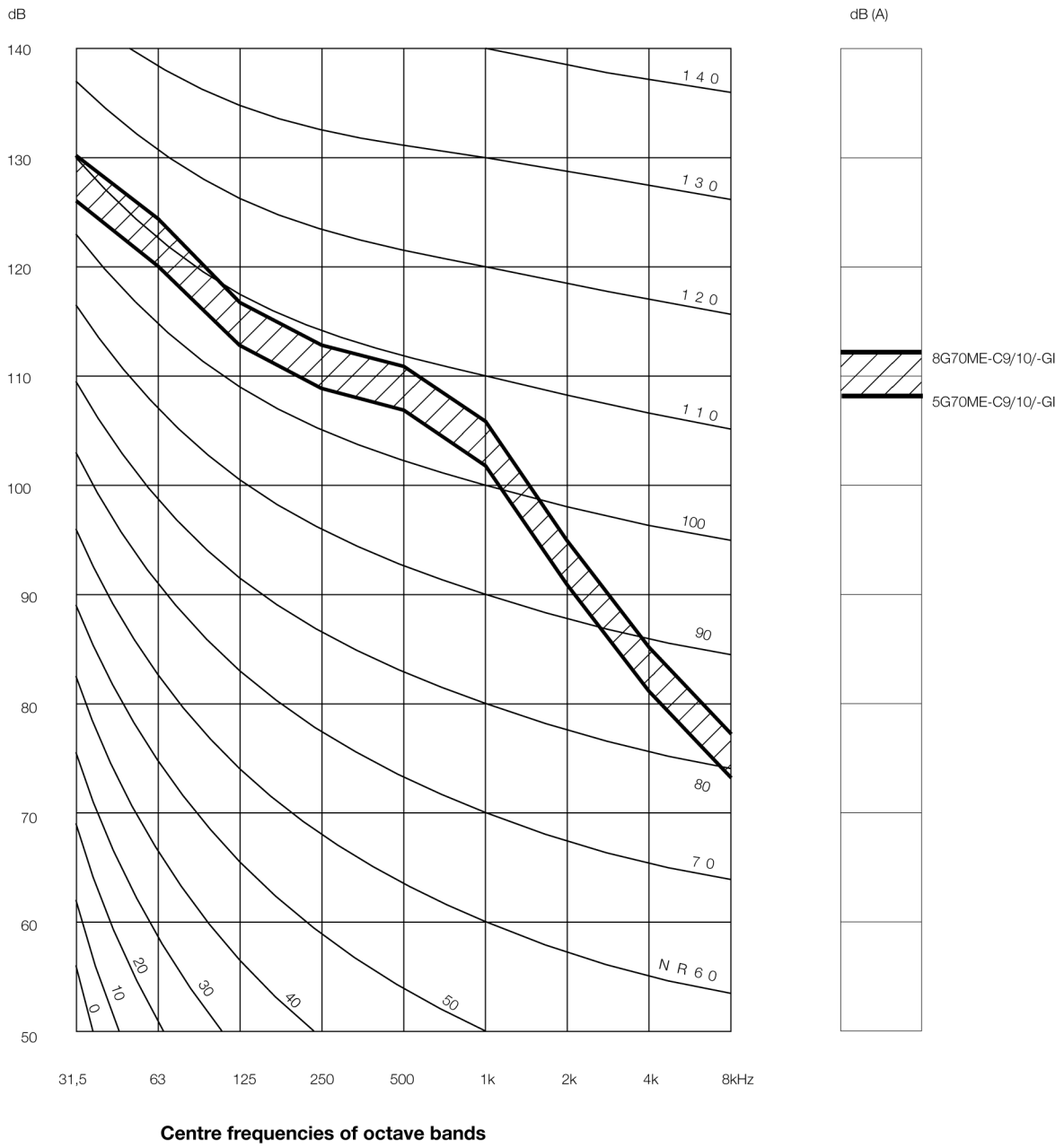

178 65 40-0.0.0

Fig. 15.04.02: ISO's NR curves and typical sound pressure levels from the engine's exhaust gas system.

The noise levels at nominal MCR and a distance of 1 metre from the edge of the exhaust gas pipe opening at angle of 30 degrees to the gas flow and valid for an exhaust gas system without boiler and silencer, etc. Data for a specific engine and cylinder no. is available on request.

2025-03-12 - en

Spark arrester

To prevent sparks from the exhaust gas being spread over deck houses, a spark arrester can be fitted as the last component in the exhaust gas system.

It should be noted that a spark arrester contributes with a considerable pressure drop, which is often a disadvantage.

It is recommended that the combined pressure loss across the silencer and/or spark arrester should not be allowed to exceed 100 mm WC at specified MCR. This depends, of course, on the pressure loss in the remaining part of the system, thus if no exhaust gas boiler is installed, 200 mm WC might be allowed.

2025-03-12 - en

This page is intentionally left blank

2025-03-12 - en

Calculation of exhaust gas back pressure

The exhaust gas back pressure after the turbocharger(s) depends on the total pressure drop in the exhaust gas piping system.

The components, exhaust gas boiler, silencer, and spark arrester, if fitted, usually contribute with a major part of the dynamic pressure drop through the entire exhaust gas piping system.

The components mentioned are to be specified so that the sum of the dynamic pressure drop through the different components should, if possible, approach 200 mm WC at an exhaust gas flow volume corresponding to the specified MCR at tropical ambient conditions. Then there will be a pressure drop of 100 mm WC for distribution among the remaining piping system.

Fig. 15.05.01 shows some guidelines regarding resistance coefficients and back-pressure loss calculations which can be used, if the maker's data for back-pressure is not available at an early stage of the project.

The pressure loss calculations have to be based on the actual exhaust gas amount and temperature valid for specified MCR. Some general formulas and definitions are given in the following.

Exhaust Gas Data

M: exhaust gas amount at specified MCR in kg/sec.
T: exhaust gas temperature at specified MCR in °C

Please note that the actual exhaust gas temperature is different before and after the boiler. The exhaust gas data valid after the turbocharger may be found in Chapter 6.

Mass Destiny of Exhaust Gas (ρ)

$$\rho \cong 1.293 \times (273 / [\,273 + T\,]) \times 1.015 \text{ in kg/m}^3$$

The factor 1.015 refers to the average back-pressure of 150 mm WC (0.015 bar) in the exhaust gas system.

Exhaust Gas Velocity (v)

In a pipe with diameter D the exhaust gas velocity is:

$$V = M/\rho \times (4 / [\,\pi \times D2]\,) \text{ in m/s}$$

Pressure Losses in Pipes (Δp)

For a pipe element, like a bend etc., with the resistance coefficient ζ, the corresponding pressure loss is:

$$\Delta p = (\zeta \times ½\, \rho\, [v2 \times 1/9.81]) \text{ in mm WC}$$

where the expression after ζ is the dynamic pressure of the flow in the pipe.

The friction losses in the straight pipes may, as a guidance, be estimated as :

1 mm WC per 1 diameter length

whereas the positive influence of the up-draught in the vertical pipe is normally negligible.

2025-03-25 - en

Pressure Losses Across Components (Δp)

The pressure loss Δp across silencer, exhaust gas boiler, spark arrester, rain water trap, etc., to be measured/ stated as shown in Fig. 15.05.01 (at specified MCR) is normally given by the relevant manufacturer.

Total Back-Pressure (ΔpM)

The total back-pressure, measured/stated as the static pressure in the pipe after the turbocharger, is then:

$$\Delta pM = \Sigma \Delta p$$

where Δp incorporates all pipe elements and components etc. as described:

Δp_M has to be lower than 350 mm WC.

(At design stage it is recommended to use max. 300 mm WC in order to have some margin for fouling).

Mesuring back pressure

At any given position in the exhaust gas system, the total pressure of the flow can be divided into dynamic pressure (referring to the gas velocity) and static pressure (referring to the wall pressure, where the gas velocity is zero).

At a given total pressure of the gas flow, the combination of dynamic and static pressure may change, depending on the actual gas velocity. The measurements, in principle, give an indication of the wall pressure, i.e., the static pressure of the gas flow.

It is, therefore, very important that the back pressure measuring points are located on a straight part of the exhaust gas pipe, and at some distance from an ‘obstruction‘, i.e. at a point where the gas flow, and thereby also the static pressure, is stable. Taking measurements, for example, in a transition piece, may lead to an unreliable measurement of the static pressure.

In consideration of the above, therefore, the total back pressure of the system has to be measured after the turbocharger in the circular pipe and not in the transition piece. The same considerations apply to the measuring points before and after the exhaust gas boiler, etc.

2025-03-25 - en

Pressure losses and coefficients of resistance in exhaust pipes

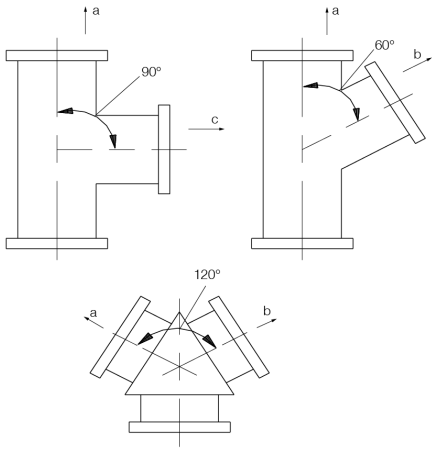

178 06 85-5.3.0a

Change-over valves

Change-over valves of type with constant cross section

ζa = 0.6 to 1.2
ζb = 1.0 to 1.5
ζc = 1.5 to 2.0

Change-over valve of type with volume

ζa = ζb = about 2.0

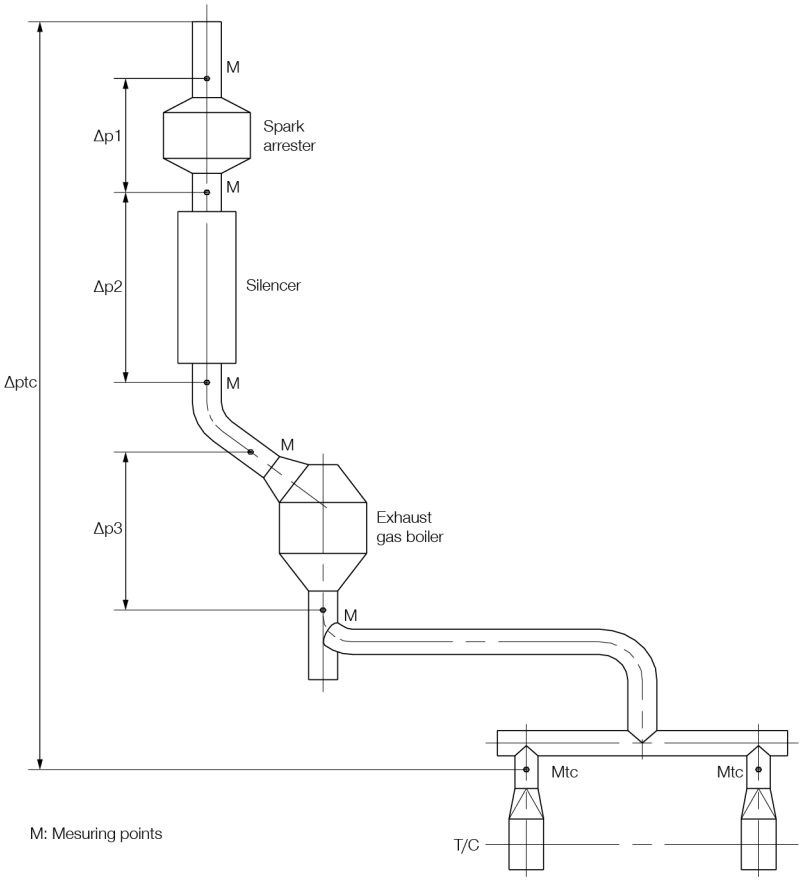

178 32 09-1.0.0

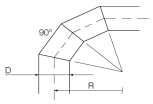

R = D	ζ = 0.60
R = 1.5D	ζ = 0.41
R = 2D	ζ = 0.27

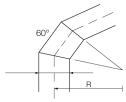

R = D	ζ = 0.30
R = 1.5D	ζ = 0.15
R = 2D	ζ = 0.10

α°	
15°	ζ = 0.06
30°	ζ = 0.15
45°	ζ = 0.29

Outlet from top of exhaust gas uptake	ζ = 1.00

Inlet (from turbocharger)	ζ = - 1.00

178 06 85-3.1.0

Fig. 15.05.01: Pressure losses and coefficients of resistance in exhaust pipes

2025-03-25 - en

Forces and moments at turbocharger

Turbocharger(s) mounted on exhaust side

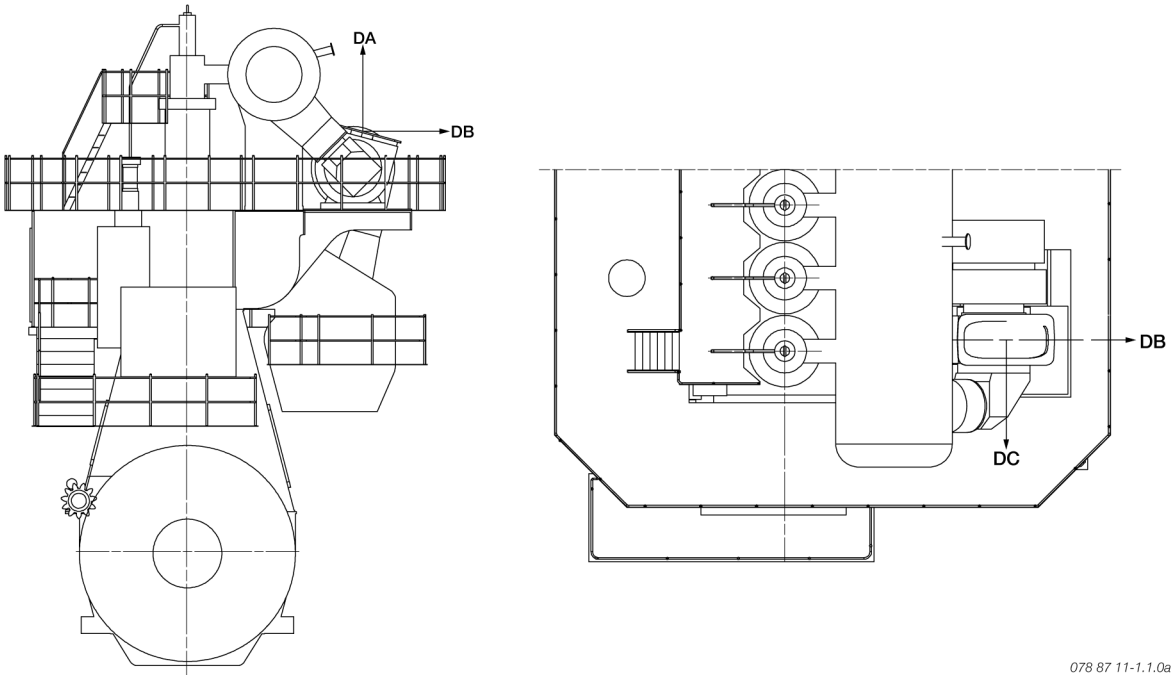

DA: Max. movement of the turbocharger flange in the vertical direction
DB: Max. movement of the turbocharger flange in the transversal direction
DC: Max. movement of the turbocharger flange in the longitudinal direction

Fig. 15.06.01a: Vectors of thermal expansion at the turbocharger exhaust gas outlet flange, turbocharger on exhaust side

2025-08-04 - en

No. of cylinders		5-8		5	6	7	8
Turbocharger		DA mm	DB mm	DC mm	DC mm	DC mm	DC mm
Make	Type						
Everllence	TCA55	8.3	1.4	1.9	2.2	2.4	2.6
	TCA66	8.7	1.5	1.9	2.2	2.4	2.6
	TCA77	10.0	1.6	1.9	2.2	2.4	2.6
	TCA88	10.5	1.7	1.9	2.2	2.4	2.6
Accelleron	A165 / A265	6.9	1.5	1.9	2.2	2.4	2.6
	A170 / A270	7.0	1.5	1.9	2.2	2.4	2.6
	A175 / A275	7.6	1.5	1.9	2.2	2.4	2.6
	A180 / A280	8.6	1.5	1.9	2.2	2.4	2.6
	A185 / A285	9.4	1.6	1.9	2.2	2.4	2.6
MHI	MET53	7.6	1.5	1.9	2.2	2.4	2.6
	MET60	8.1	1.5	1.9	2.2	2.4	2.6
	MET66	8.6	1.5	1.9	2.2	2.4	2.6
	MET71	9.0	1.5	1.9	2.2	2.4	2.6
	MET83	9.7	1.5	1.9	2.2	2.4	2.6

Table 15.06.01: Maximum expected movements of the exhaust gas flange resulting from thermal expansion

2025-08-04 - en

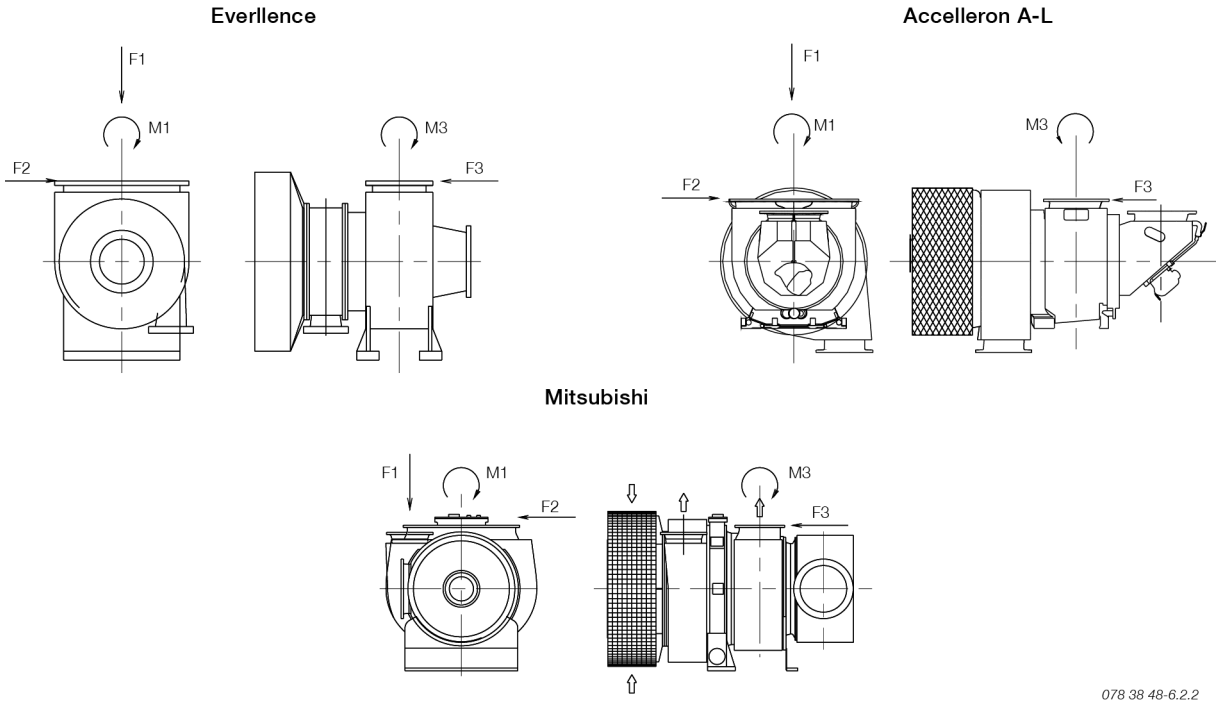

Fig. 15.06.02: Forces and moments on the turbocharger(s) exhaust gas outlet flange

Table 15.06.02 indicates the maximum permissible forces (F1, F2 and F3) and moments (M1 and M3), on the exhaust gas outlet flange of the turbocharger(s). Reference is made to Fig. 15.06.02.

Turbocharger		M1 Nm	M3 Nm	F1 N	F2 N	F3 N
Make	Type					
Everllence	TCA55	3,400	6,900	9,100	9,100	4,500
	TCA66	3,700	7,500	9,900	9,900	4,900
	TCA77	4,100	8,200	10,900	10,900	5,400
	TCA88	4,500	9,100	12,000	12,000	5,900
Accelleron	A165 / A265	1,200	1,200	2,800	1,800	1,800
	A170 / A270	1,900	1,900	3,600	2,400	2,400
	A175 / A275	3,300	3,300	5,400	3,500	3,500
	A180 / A280	4,600	4,600	6,800	4,400	4,400
	A185 / A285	6,600	6,600	8,500	5,500	5,500
MHI	MET53	4,900	2,500	7,300	2,600	2,300
	MET60	6,000	3,000	8,300	2,900	3,000
	MET66	6,800	3,400	9,300	3,200	3,000
	MET71	7,000	3,500	9,600	3,300	3,100
	MET83	9,800	4,900	11,700	4,100	3,700

Table 15.06.02: The maximum permissible forces and moments on the turbocharger(s) gas outlet flanges

2025-08-04 - en

This page is intentionally left blank

2025-08-04 - en

Diameter of exhaust gas pipes

The exhaust gas pipe diameters listed in Table 15.07.01 are based on the exhaust gas flow capacity according to ISO ambient conditions and an exhaust gas temperature of 250ºC.

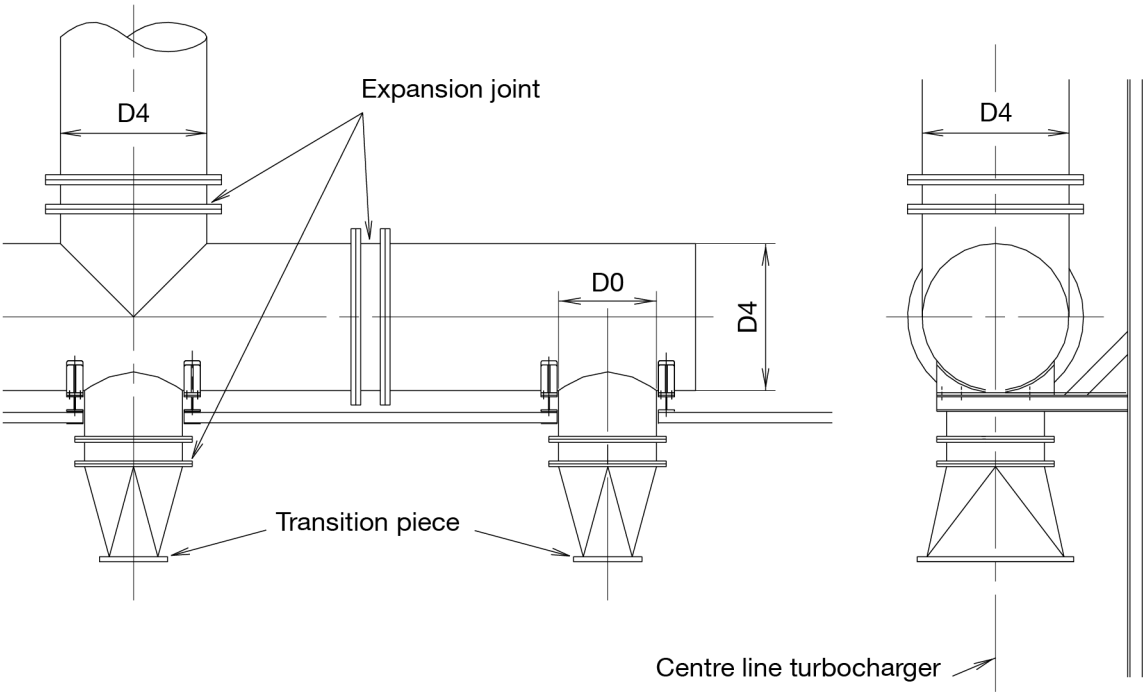

Fig. 15.07.01a: Exhaust pipe system, with turbocharger located on exhaust side of engine

The exhaust gas velocities and mass flow listed apply to collector pipe D4. The table also lists the diameters of the corresponding exhaust gas pipes D0 for various numbers of turbochargers installed.

2025-03-25 - en

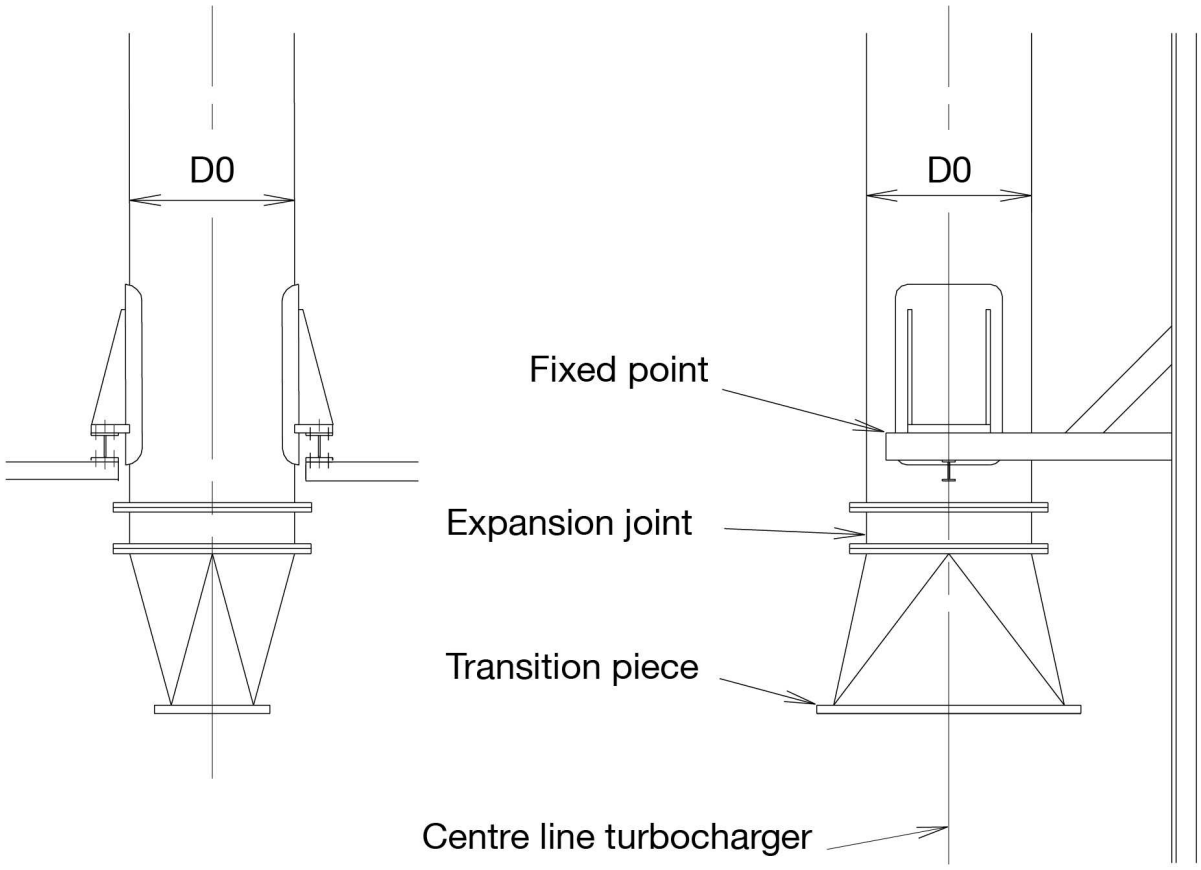

178 31 59-8.1.0

Fig. 15.07.01b: Exhaust pipe system, with single turbocharger located on aft end of engine

Gas velocity				Exhaust gas pipe diameters			
35 m/s	40 m/s	45 m/s	50 m/s	D0			D4
Gas Mass Flow				1 T/C	2 T/C	3 T/C	
kg/s	kg/s	kg/s	kg/s	[DN]	[DN]	[DN]	[DN]
24.5	28.0	31.5	35.1	1,150	800	650	1,150
26.7	30.5	34.3	38.2	1,200	850	700	1,200
31.4	35.8	40.3	44.8	1,300	900	750	1,300
36.4	41.6	46.8	51.9	1,400	1,000	800	1,400
41.7	47.7	53.7	59.6	1,500	1,050	850	1,500
47.5	54.3	61.1	67.8	1,600	1,150	900	1,600
53.6	61.3	68.9	76.6	1,700	1,200	1,000	1,700
60.1	68.7	77.3	85.9	1,800	1,300	1,050	1,800
67.0	76.5	86.1	95.7	N.A.	1,300	1,100	1,900
74.2	84.8	95.4	106.0	N.A.	1,400	1,150	2,000

2025-03-25 - en

Table 15.07.01: Exhaust gas pipe diameters and exhaust gas mass flow at various velocities

2025-03-25 - en

This page is intentionally left blank

01 Engine Design
02 Engine Layout and Load Diagrams, SFOC, dot 5
03 Turbocharger Selection & Exhaust Gas Bypass
04 Electricity Production
05 Installation Aspects
06 List of Capacities: Pumps, Coolers & Exhaust Gas
07 Fuel
08 Lubricating Oil
09 Cylinder Lubrication
10 Piston Rod Stuffing Box Drain Oil
11 Low-temperature Cooling Water
12 High-temperature Cooling Water
13 Starting and Control Air
14 Scavenge Air
15 Exhaust Gas
16 Engine Control System
17 Vibration Aspects
18 Monitoring Systems and Instrumentation
19 Dispatch Pattern, Testing, Spares and Tools
20 Project Support and Documentation
21 Appendix

This page is intentionally left blank

Control system layout, control units and interfaces

The ECS for the ME engine is prepared for conventional remote control with an interface to the bridge control system and the local operating panel (LOP).

The ME control system has a high level of redundancy. It has been a design requirement that no single failure related to the system may cause the engine to stop. In most cases, a single failure will not affect the performance or power availability, or only partly do so by activating a slowdown.

Control units for the specific tasks described below are based on the available module types in the Triton hardware platform.

Note that any controller could be replaced without stopping the engine, which will revert to normal operation immediately after the replacement of the defective unit.

The layout of the ECS is shown in Fig. 16.01.01, the mechanical-hydraulic systems in Figs. 16.01.02a and b, and the pneumatic system in Fig. 16.01.03.

Control system layout and control units

Main operating panel

Fig. 16.01.01 shows the layout of the ECS and the two redundant main operating panel (MOP) screens which are available for the crew to carry out engine commands, adjust engine parameters, select running modes, and observe the control system status.

2025-06-18 - en

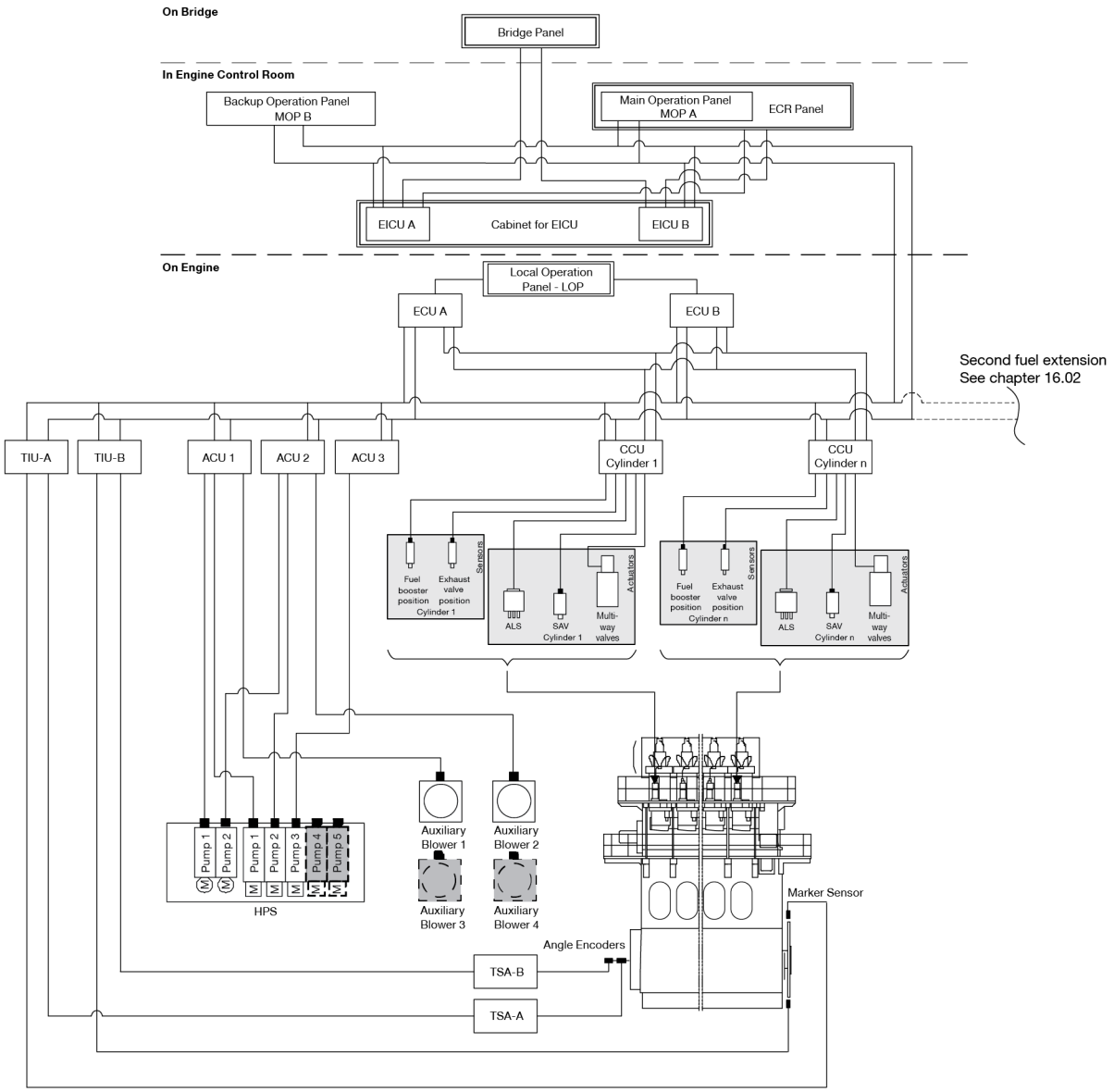

178 70 18-3.1.0

Fig. 16.01.01: Engine control system layout with EICU cabinet for mounting in the ECR or on the engine

Both MOP screens are located in the engine control room (ECR), one is a back-up unit in the event of failure, or they could be used simultaneously, if preferred.

Both MOP screens consist of a marine approved personal computer with a touch screen and pointing device as shown in Fig. 5.16.02.

Engine control unit

For redundancy purposes, the control system in Fig. 16.01.01 comprises two engine control units (ECU) operating in parallel and performing the same tasks, one being a hot standby for the other. If one of the ECUs fail, the other unit will take over without any interruption.

2025-06-18 - en

The ECUs perform tasks like:

- Speed governor functions, start/stop sequences, timing of fuel injection, timing of exhaust valve actuation, timing of starting valves, etc.
- Continuous control of auxiliary functions handled by the ACUs
- Alternative running modes and programs

Cylinder control unit

The control system includes one cylinder control unit (CCU) per cylinder. The CCU controls the electronic control valves for fuel injection, exhaust valve actuation, and starting air valves (SAVs) according to the commands received from the ECU.

All CCUs are identical and in the event of a CCU failure on one cylinder, only this cylinder will automatically be cut out of operation.

Auxiliary control unit

The control of auxiliary equipment on the engine is normally divided among four auxiliary control units (ACUs) so that, in the event of a unit failure, there is sufficient redundancy to maintain operation of the engine.

The ACUs control auxiliary blowers, electrically and engine driven hydraulic oil pumps of the hydraulic power supply (HPS) unit, and the scavenge air control unit (SCU).

If applied, the ACU also controls the cooling water system (load dependent cylinder liner (LDCL)/jacket water recirculation system (JWRS)) and the exhaust gas bypass (EGB).

Engine interface control unit

The engine interface control unit (EICC) controls the interface with surrounding control systems, see Fig. 16.01.01.

The EICC is located in either the ECR (recommended) or the engine room.

Control network

The main operating panels (MOP-A and MOP-B) are connected to the control system controllers via a redundant ethernet-based control network. Due to limitations in a copper-based ethernet, the maximum cabling distance between the engine and the engine room is 100 m.

2025-06-18 - en

Power supply for engine control system

The ECS requires two separate power supplies with battery backup, power supply A and B, see Table 16.01.01.

The ME-ECS power supplies must be separated from other DC systems, i.e. only ME-ECS components must be connected to the supplies.

Power supply A	
System parameters	Values and description
System type	IT (floating), DC system with individually isolated outputs
Voltage	Input 100-240 V AC, 45-65 Hz, output 24 V DC
Protection	Input over current, output over current, output high/low voltage
Alarms as potential free contacts	AC power, UPS battery mode, batteries not available (fuse fail)

Power supply B	
System parameters	Values and description
System type	IT (floating), DC system w. individually isolated outputs
Voltage	Input 110-240 V AC, output 24 V DC
Protection	Input over current, output over current, output high/low voltage
Alarms as potential free contacts	AC power, UPS battery mode, batteries not available (fuse fail)

Table 16.01.01: ME-ECS power supply description

Local operating panel

During normal operation, the engine can be controlled either from the bridge or the ECR.

Alternatively, the LOP can be activated. This redundant control is a substitute for the previous engine side control console mounted directly on MC engines.

The LOP is as standard placed on the engine.

Basic functions are available from the LOP, such as starting, speed control, stopping, reversing, and the most important engine data are displayed.

Hydraulic power supply

The purpose of the HPS unit is to deliver the necessary high-pressure hydraulic oil flow to the hydraulic cylinder units (HCU) on the engine at the required pressure during start-up as well as in normal service.

Figs. 16.01.02a and b show mechanical-hydraulic systems with mechanically and electrically driven hydraulic power supplies, respectively.

2025-06-18 - en

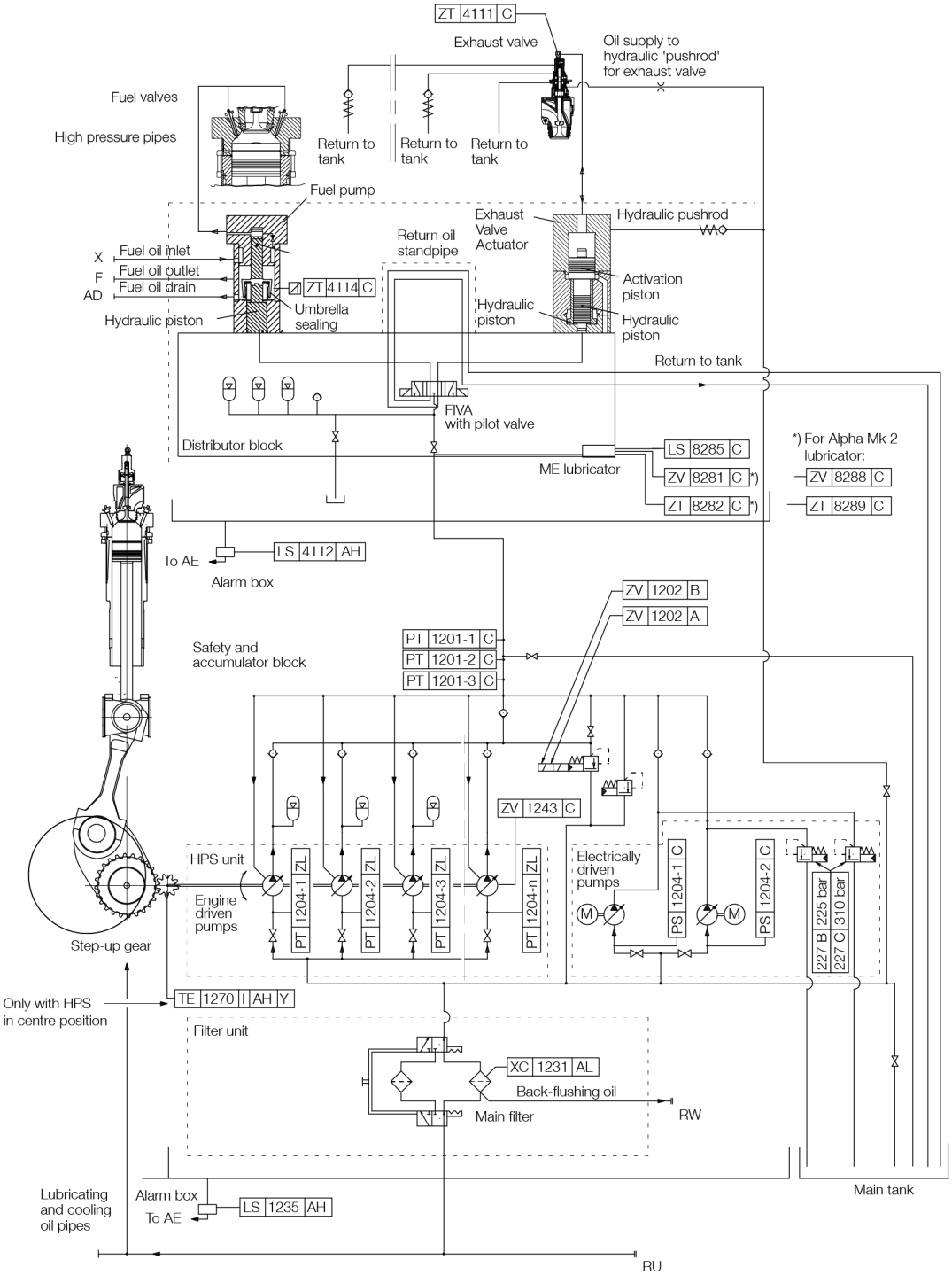

The letters refer to list of ‘counterflanges’
The item no. refer to ‘guidance values automation’

Fig. 16.01.02a: Mechanical-hydraulic system with mechanically driven hydraulic power supply, 300 bar, common supply

For the standard mechanically driven HPS unit in Fig. 16.01.02a, one of the two electrically driven start-up pumps is activated at engine start.

2025-06-18 - en

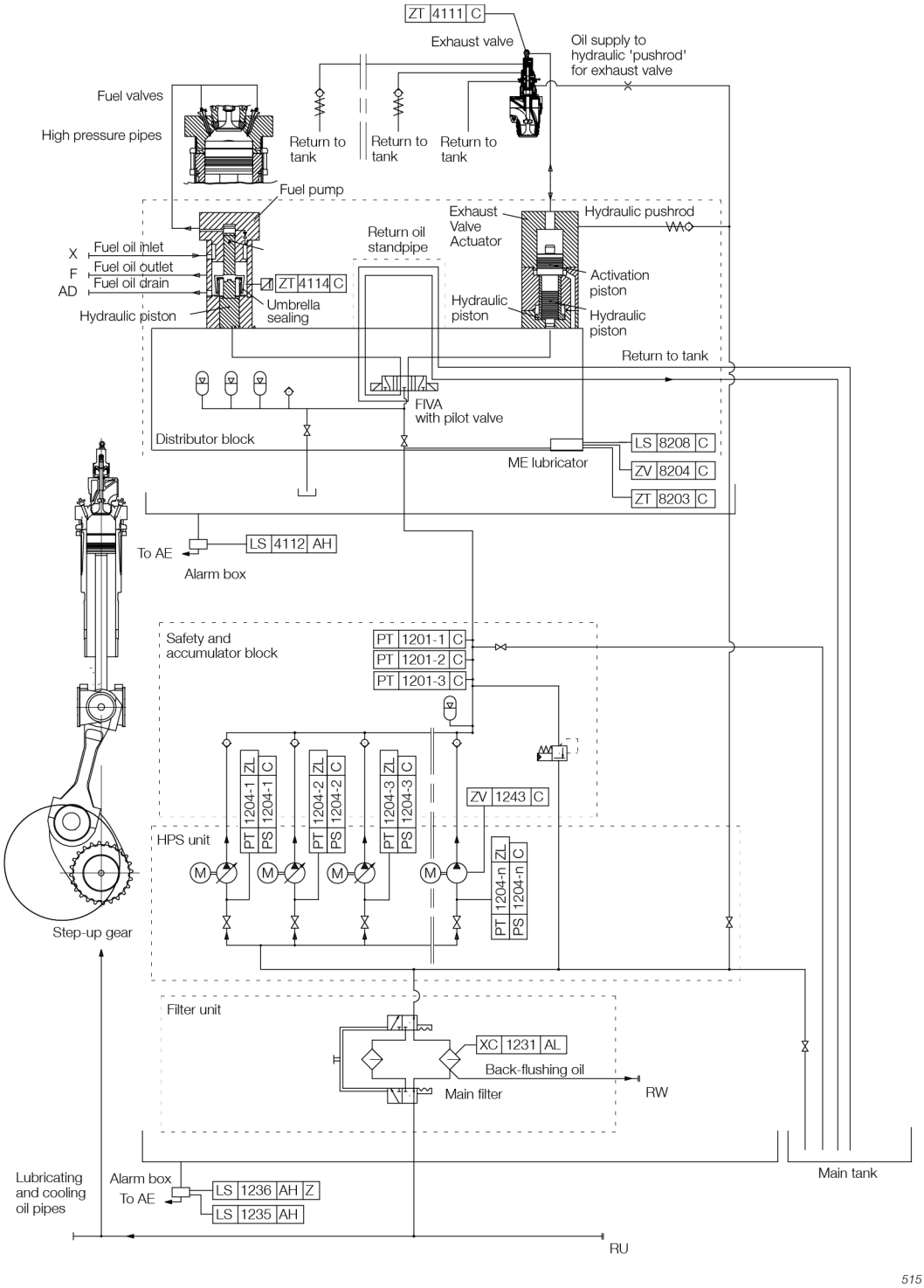

The letters refer to list of ‘counterflanges’
The item no. refer to ‘guidance values automation’

Fig. 16.01.02b: Mechanical-hydraulic system with electrically driven hydraulic power supply, 300 bar, common supply. Example from S90/80ME-C engine

2025-06-18 - en

The multiple pump configuration with standby pumps ensures redundancy regarding hydraulic power supply. The control of the engine and electrically driven pumps are divided between the three ACUs.

Sizes and capacities of the HPS unit depend on the engine type. Chapter 8 provides further details about the HPS and the lubricating oil/hydraulic oil system.

Engine control system interfaces

To support the navigator, vessels are equipped with a ship control system, which includes subsystems for supervising and protecting the main propulsion engine.

Alarm system

The alarm system has no direct effect on the ECS. An alarm will alert the crew that an abnormal condition requires attention.

The alarm system is an independent system, in general covering more than the main engine itself, and its task is to monitor the service condition and to activate alarms if a normal service limit is exceeded.

Slowdown system

The slowdown system receives slowdown requests from either the ECS or the alarm and monitoring system (AMS), and if the request is not cancelled, a slowdown command will be sent to ECS.

Safety system

The engine safety system is an independent system with sensors on the main engine, fulfilling the requirements of the respective classification society and Everllence. If a critical value is reached for one of the measuring points, the input signal from the safety system must cause either a cancellable or a non-cancellable shutdown signal to the ECS.

For the safety system, combined shutdown and slowdown panels approved by Everllence are available with the following options:

- Lyngsø Marine
- Kongsberg Maritime
- Nabtesco
- Mitsui Zosen Systems Research

If separate shutdown and slowdown panels are installed, only panels approved by Everllence must be used.

The remote control system and the safety system (shutdown and slowdown panel) must be compatible.

Telegraph system

This system enables the navigator to transfer commands of engine speed and direction of rotation from the bridge, the ECR, or the LOP, which provides signals for speed setting and engine stop to the ECS.

The ECR and the LOP are provided with combined telegraph and speed setting units.

2025-06-18 - en

Remote control system

Normally, the remote control system has three alternative control stations:

- bridge control
- ECR control
- local control.

The remote control system must be delivered by a supplier approved by Everllence.

Bridge control systems from suppliers approved by Everllence are available with the following options:

for fixed pitch propeller plants:

- Kongsberg Maritime
- Mitsui E&S Systems Research (MSR)
- Nabtesco
- Wärtsilä Lyngsø Marine.

for controllable pitch propeller plants:

- Kongsberg Maritime
- Everllence (Alphatronic)
- Mitsui E&S Systems Research (MSR)
- Nabtesco
- Wärtsilä Lyngsø Marine

Power management system

The system handles the power supply onboard, i.e. starting and stopping generating sets, and activation/deactivation of the main engine shaft generator (SG), if fitted.

The normal function involves starting, synchronising, phasing-in, load distribution, and stopping generators based on the load of the grid.

The ECS offers a number of interface options for safe connection/dis-connection of shaft generators.

Auxiliary equipment system

Input signals for ‘Auxiliary system ready’ come from the remote control system based on the status of:

- fuel oil system
- lube oil system
- cooling water systems

and from the ECS:

- turning gear disengaged
- main starting valve ‘open’
- control air valve for sealing air ‘open’
- control air valve for air spring ‘open’
- auxiliary blowers running
- hydraulic power supply ready.

2025-06-18 - en

Monitoring system

The ECS is supported by engine management services (EMS), which includes PMI auto-tuning and Computer Controlled Surveillance-Engine Diagnostics System (CoCoS-EDS) applications.

Chapter 18 gives a description of the EMS.

Instrumentation

Chapter 18 includes lists of instrumentation for:

- class requirements and Everllence' requirements for alarms, slowdown and shutdown for unattended machinery spaces
- local instruments
- control devices.

Fig. 16.01.03 shows a pneumatic manoeuvring diagram for a vessel with fixed pitch propeller (FPP).

2025-06-18 - en

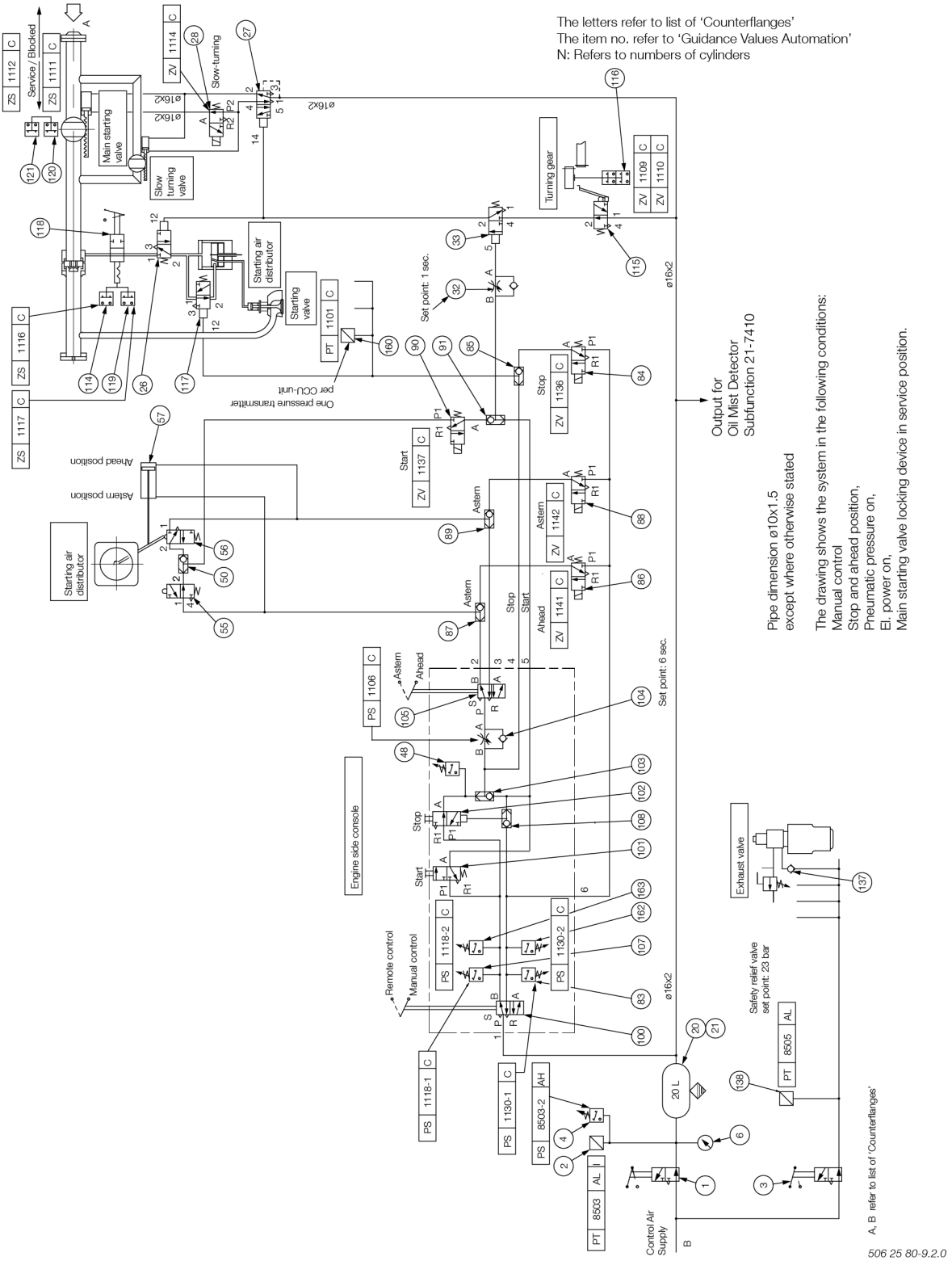

Fig. 16.01.03: Pneumatic manoeuvring diagram, FPP

01 Engine Design
02 Engine Layout and Load Diagrams, SFOC, dot 5
03 Turbocharger Selection & Exhaust Gas Bypass
04 Electricity Production
05 Installation Aspects
06 List of Capacities: Pumps, Coolers & Exhaust Gas
07 Fuel
08 Lubricating Oil
09 Cylinder Lubrication
10 Piston Rod Stuffing Box Drain Oil
11 Low-temperature Cooling Water
12 High-temperature Cooling Water
13 Starting and Control Air
14 Scavenge Air
15 Exhaust Gas
16 Engine Control System
17 Vibration Aspects
18 Monitoring Systems and Instrumentation
19 Dispatch Pattern, Testing, Spares and Tools
20 Project Support and Documentation
21 Appendix

This page is intentionally left blank

Vibration aspects

The vibration characteristics of the two-stroke low speed diesel engines can for practical purposes be split up into four categories, and if the adequate countermeasures are considered from the early project stage, the influence of the excitation sources can be minimised or fully compensated.

In general, the marine diesel engine may influence the hull with the following:
• External unbalanced moments These can be classified as unbalanced 1st and 2nd order external moments, which need to be considered only for certain cylinder numbers
• Guide force moments
• Axial vibrations in the shaft system
• Torsional vibrations in the shaft system.

The external unbalanced moments and guide force moments are illustrated in Fig. 17.01.01.

In the following, a brief description is given of their origin and of the proper countermeasures needed to render them harmless.

External unbalanced moments

The inertia forces originating from the unbalanced rotating and reciprocating masses of the engine create unbalanced external moments although the external forces are zero.

Of these moments, the 1st order (one cycle per revolution) and the 2nd order (two cycles per revolution) need to be considered for engines with a low number of cylinders. On 7-cylinder engines, also the 4th order external moment may have to be examined. The inertia forces on engines with more than 6 cylinders tend, more or less, to neutralise themselves.

Countermeasures have to be taken if hull resonance occurs in the operating speed range, and if the vibration level leads to higher accelerations and/or velocities than the guidance values given by international standards or recommendations (for instance related to special agreement between shipowner and shipyard). The natural frequency of the hull depends on the hull's rigidity and distribution of masses, whereas the vibration level at resonance depends mainly on the magnitude of the external moment and the engine's position in relation to the vibration nodes of the ship.

2025-03-26 - en

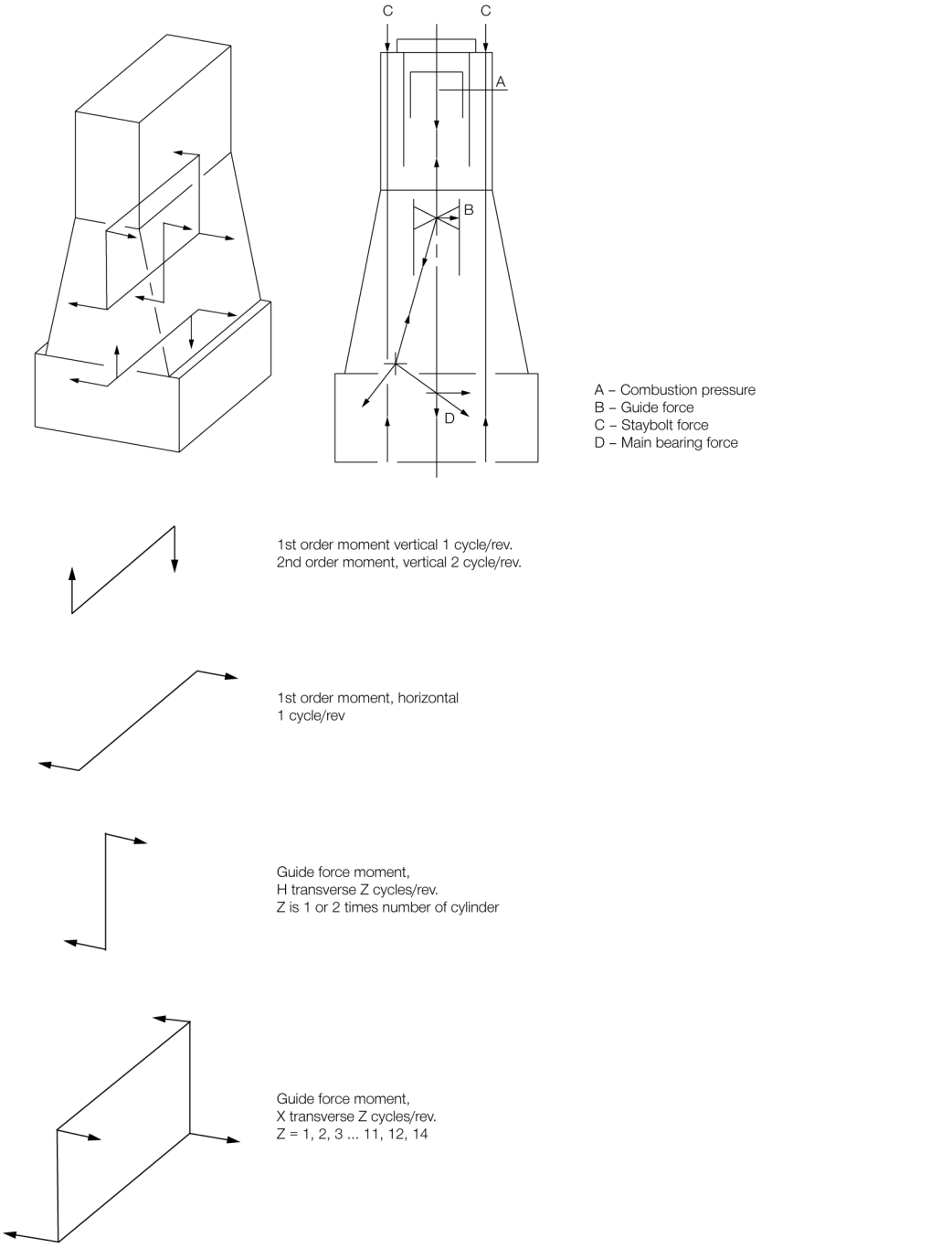

Fig. 17.01.01: External unbalanced moments and guide force moments

2025-03-26 - en

First and second order moments

The 2nd order moment acts only in the vertical direction. Precautions need only to be considered for 4, 5 and 6-cylinder engines in general.

Resonance with the 2nd order moment may occur in the event of hull vibrations with more than 3 nodes. Contrary to the calculation of natural frequency with 2 and 3 nodes, the calculation of the 4 and 5-node natural frequencies for the hull is a rather comprehensive procedure and often not very accurate, despite advanced calculation methods.

A 2nd order moment compensator comprises two counter-rotating masses running at twice the engine speed.

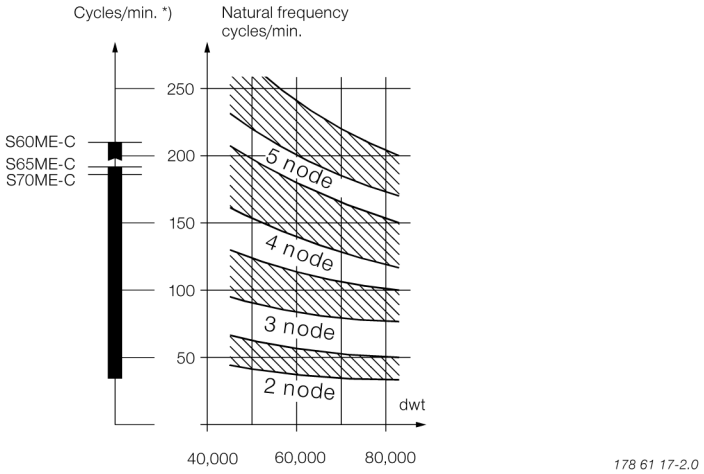

*) Frequency of engine moment
M2V = 2 x engine speed

Fig. 17.02.01: Statistics of vertical hull vibrations, an example from tankers and bulk carriers

Compensator solutions

Several solutions are available to cope with the 2nd order moment, as shown in Fig. 17.03.02, out of which the most cost efficient one can be chosen in the individual case, e.g.:

1. No compensators, if considered unnecessary on the basis of natural frequency, nodal point and size of the 2nd order moment.
2. A compensator mounted on the aft end of the engine, driven by chain
3. A compensator mounted on the fore end, driven from the crankshaft through a separate chain drive.

As standard, the compensators reduce the external 2nd order moment to a level as for a 7-cylinder engine or less.

Briefly speaking, solution 1) is applicable if the node is located far from the engine, or the engine is positioned more or less between nodes. Solution 2) or 3) should be considered where one of the engine ends is positioned in a node or close to it, since a compensator is inefficient in a node or close to it and therefore superfluous.

2025-06-18 - en

Determine the need

A decision regarding the vibrational aspects and the possible use of compensators must be taken at the contract stage. If no experience is available from sister ships, which would be the best basis for deciding whether compensators are necessary or not, it is advisable to make calculations to determine which of the solutions should be applied.

Preparation for compensators

If compensator(s) are initially omitted, the engine can be delivered prepared for compensators to be fitted on engine fore end later on, but the decision to prepare or not must be taken at the contract stage. Measurements taken during the sea trial, or later in service and with fully loaded ship, will be able to show if compensator(s) have to be fitted at all.

If no calculations are available at the contract stage, we advise to make preparations for the fitting of a compensator in the steering compartment, see Section 17.03.

Basic design regarding compensators

For 5 and 6-cylinder engines with mechanically driven HPS, the basic design regarding 2nd order moment compensators is:

- With compensator aft
- Prepared for compensator fore.

For 5 and 6-cylinder engines with electrically driven HPS, the basic design regarding 2nd order moment compensators is::

- With Everllence B&W external electrically driven moment compensator
- Prepared for compensator fore.

For 4-cylinder engines, the information is available on request.

First order moments on 4-cylinder engines

1st order moments act in both vertical and horizontal direction. For our two-stroke engines with standard balancing these are of the same magnitudes.

For engines with five cylinders or more, the 1st order moment is rarely of any significance to the ship. It can, however, be of a disturbing magnitude in four-cylinder engines.

Resonance with a 1st order moment may occur for hull vibrations with 2 and/or 3 nodes. This resonance can be calculated with reasonable accuracy, and the calculation will show whether a compensator is necessary or not on four-cylinder engines.

A resonance with the vertical moment for the 2 node hull vibration can often be critical, whereas the resonance with the horizontal moment occurs at a higher speed than the nominal because of the higher natural frequency of horizontal hull vibrations.

2025-06-18 - en

Balancing first order moments

As standard, four-cylinder engines are fitted with 1st order moment balancers in shape of adjustable counterweights, as illustrated in Fig. 17.02.02. These can reduce the vertical moment to an insignificant value (although, increasing correspondingly the horizontal moment), so this resonance is easily dealt with. A solution with zero horizontal moment is also available.

First order moment compensators

In rare cases, where the 1st order moment will cause resonance with both the vertical and the horizontal hull vibration mode in the normal speed range of the engine, a 1st order compensator can be introduced as an option, reducing the 1st order moment to a harmless value.

Since resonance with both the vertical and the horizontal hull vibration mode is rare, the standard engine is not prepared for the fitting of 1st order moment compensators.

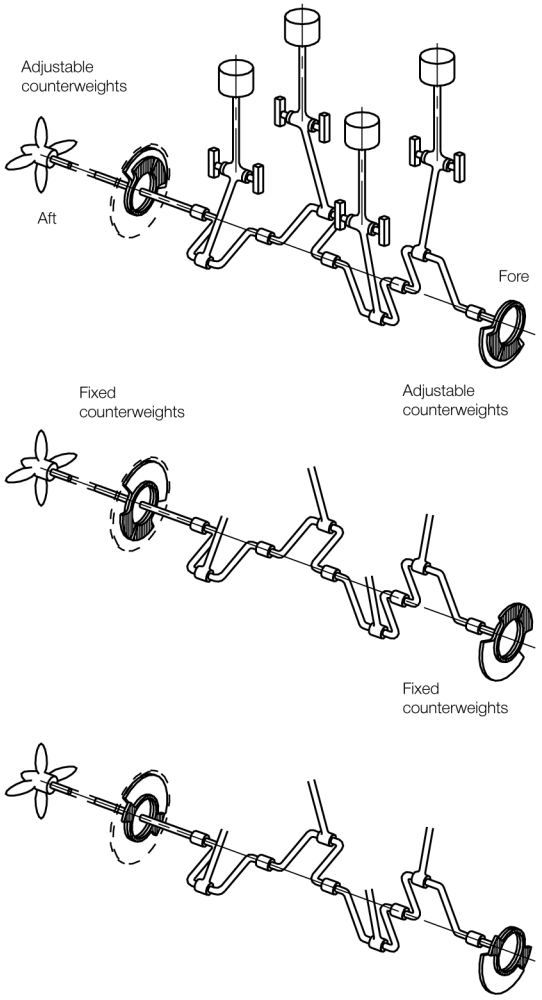

178 16 78-7.0

Fig. 17.02.02: Examples of counterweights

This page is intentionally left blank

2025-06-18 - en

Electrically Driven Moment Compensator

If it is decided not to use chain driven moment compensators and, furthermore, not to prepare the main engine for compensators to be fitted later, another solution can be used, if annoying 2nd order vibrations should occur: An external electrically driven moment compensator can neutralise the excitation, synchronised to the correct phase relative to the external force or moment.

This type of compensator needs an extra seating fitted, preferably, in the steering gear room where vibratory deflections are largest and the effect of the compensator will therefore be greatest.

The electrically driven compensator will not give rise to distorting stresses in the hull, but it is more expensive than the engine-mounted compensators. It does, however, offer several advantages over the engine mounted solutions:

• When placed in the steering gear room, the compensator is not as sensitive to the positioning of the node as the compensators 2) and 3) mentioned in Section 17.02.

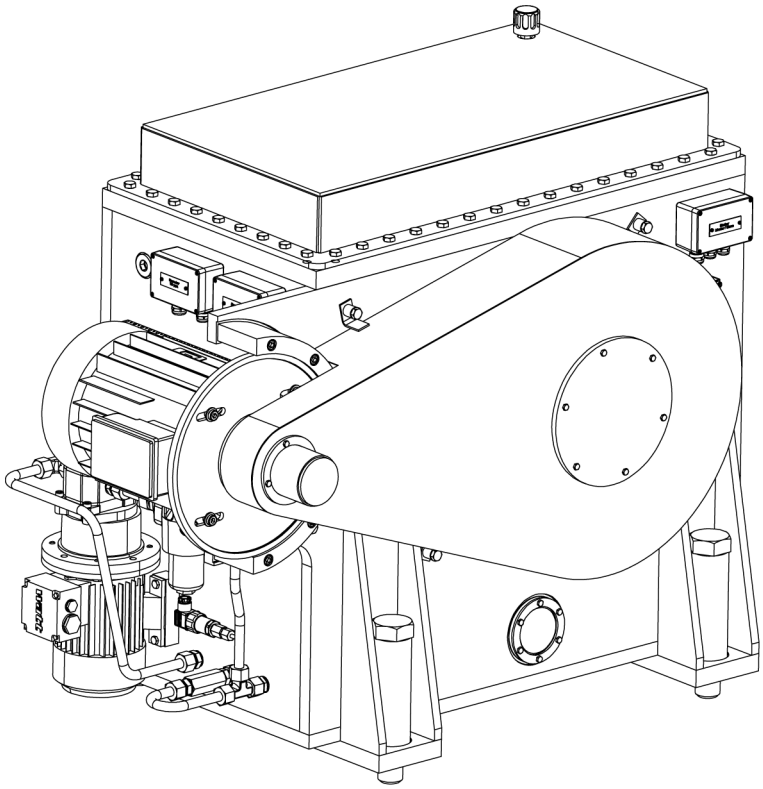

178 57 45-6.0.0

Fig. 17.03.01: Everllence B&W external electrically driven moment compensator

• The decision whether or not to install compensators can be taken at a much later stage of a project, since no special version of the engine structure has to be ordered for the installation.

• No preparation for a later installation nor an extra chain drive for the compensator on the fore end of the engine is required. This saves the cost of such preparation, often left unused.

2025-06-18 - en

• Compensators could be retrofit, even on ships in service, and also be applied to engines with a higher number of cylinders than is normally considered relevant, if found necessary.

• The compensator only needs to be active at speeds critical for the hull girder vibration. Thus, it may be activated or deactivated at specified speeds automatically or manually.

• Combinations with and without moment compensators are not required in torsional and axial vibration calculations, since the electrically driven moment compensator is not part of the mass-elastic system of the crankshaft.

Furthermore, by using the compensator as a vibration exciter a ship's vibration pattern can easily be identified without having the engine running, e.g. on newbuildings at an advanced stage of construction. If it is verified that a ship does not need the compensator, it can be removed and reused on another ship.

It is a condition for the application of the rotating force moment compensator that no annoying longitudinal hull girder vibration modes are excited. Based on our present knowledge, and confirmed by actual vibration measurements onboard a ship, we do not expect such problems.

Balancing other forces and moments

Further to compensating 2nd order moments, electrically driven balancers are also available for balancing other forces and moments.

2025-06-18 - en

Moment compensator
Aft end

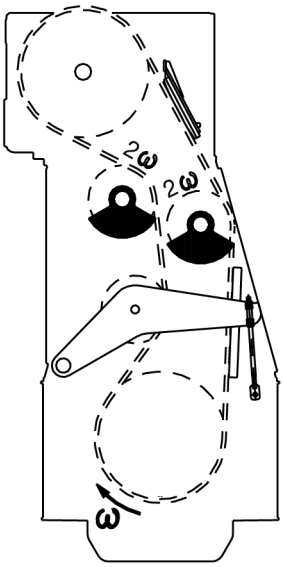

Compensating moment
F2C × Lnode
outbalances M2V

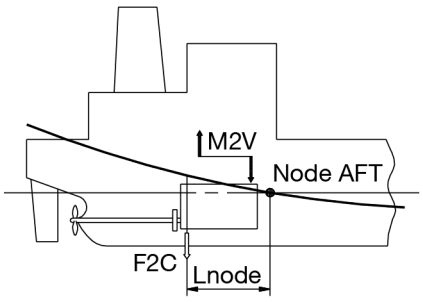

Moment from compensator
M2C reduces M2V

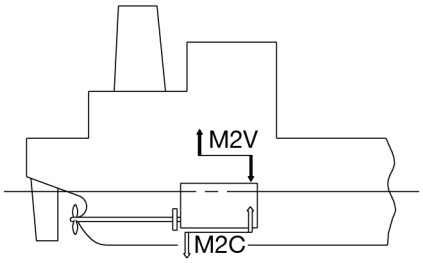

Moment compensator

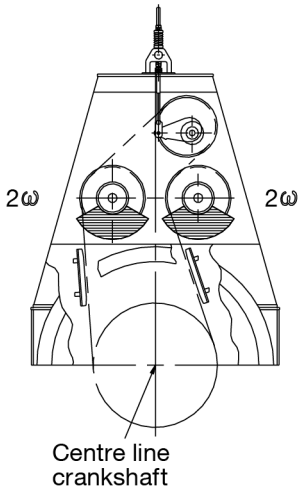

Electrically driven moment compensator

Compensating moment
F_D × Lnode
outbalances M2V

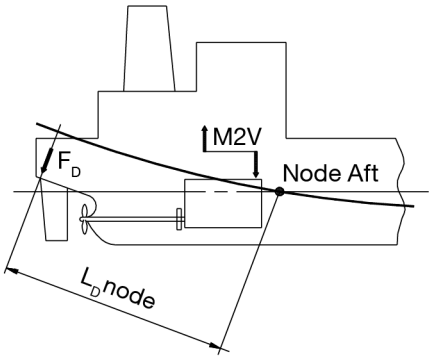

3 and 4-node vertical hull girder mode

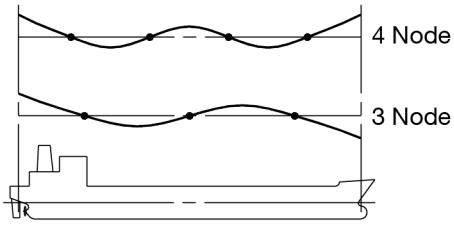

178 27 10-4.2

Fig. 17.03.02: Compensation of second order vertical external moments

2025-06-18 - en

This page is intentionally left blank

2025-06-18 - en

Power related unbalance

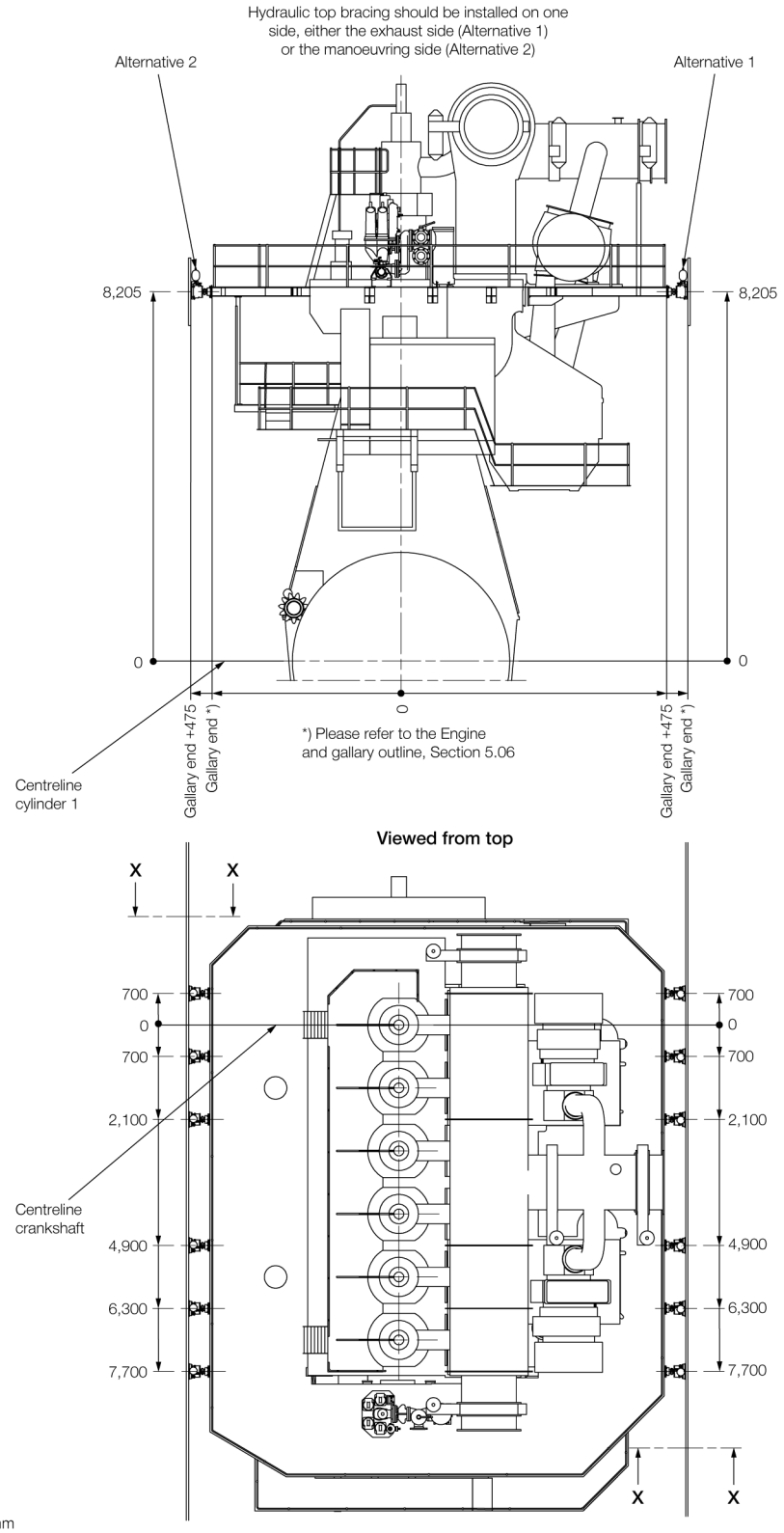

Note: All dimensions are in mm

602 99 54-8.5.0

Fig. 5.15.01: 6G80ME-C10.7/-GI-HPSCR, Example of Hydraulic top bracing arrangement, with two turbocharger(s) mounted on the exhaust side

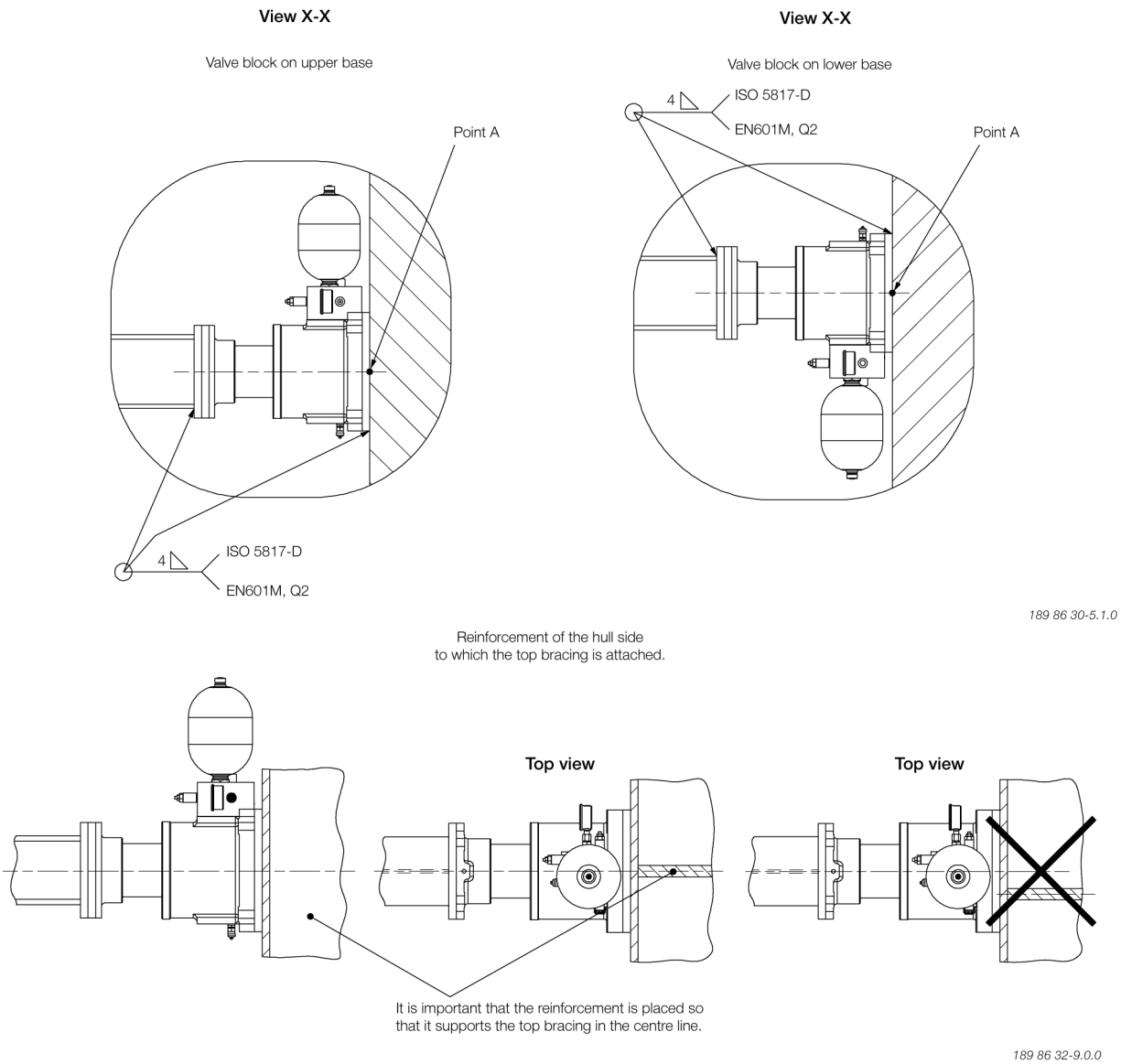

Fig. 5.15.02: Hydraulic top bracing data

As the rigidity of the casing structure to which the top bracing is attached is most important, it is recommended that the top bracing is attached directly into a deck.

Required rigidity of the casing side point A:

In the axial direction of the hydraulic top bracing: Force per bracing: 127 kN

Max. corresponding deflection of casing side: 0.51 mm

In the horizontal and vertical direction of the hydraulic top bracing: Force per bracing: 22 kN

Max. corresponding deflection of casing side : 2.00 mm

Guide force moments

The so-called guide force moments are caused by the transverse reaction forces acting on the crossheads due to the connecting rod/crankshaft mechanism. These moments may excite engine vibrations, moving the engine top athwartships and causing a rocking (excited by H-moment) or twisting (excited by X-moment) movement of the engine as illustrated in Fig. 17.05.01.

The guide force moments corresponding to the MCR rating (L_1) are stated in Table 17.07.01.

Top bracing

The guide force moments are harmless except when resonance vibrations occur in the engine/ double bottom system.

As this system is very difficult to calculate with the necessary accuracy, Everllence strongly recommend, as standard, that top bracing is installed between the engine's upper platform brackets and the casing side.

The vibration level on the engine when installed in the vessel must comply with Everllence vibration limits as stated in Fig. 17.05.02.

We recommend using the hydraulic top bracing which allow adjustment to the loading conditions of the ship. Mechanical top bracings with stiff connections are available on request.

With both types of top bracing, the above-mentioned natural frequency will increase to a level where resonance will occur above the normal engine speed. Details of the top bracings are shown in Chapter 05.

Definition of guide force moments

Over the years it has been discussed how to define the guide force moments. Especially now that complete FEM-models are made to predict hull/ engine interaction, the proper definition of these moments has become increasingly important.

2025-06-18 - en

H-type guide force moment (M_H)

Each cylinder unit produces a force couple consisting of:

1. A force at crankshaft level
2. Another force at crosshead guide level. The position of the force changes over one revolution as the guide shoe reciprocates on the guide.

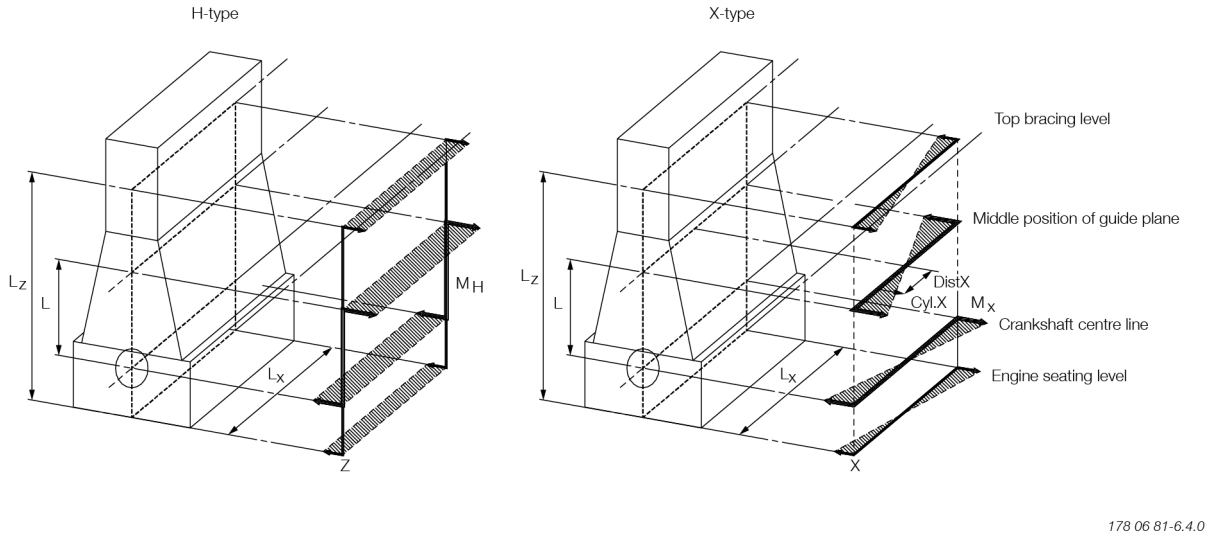

Fig. 17.05.01: H-type and X-type guide force moments

As the deflection shape for the H-type is equal for each cylinder, the Nth order H-type guide force moment for an N-cylinder engine with regular firing order is:

$N \times M_{H(one\ cylinder)}$

For modelling purposes, the size of the forces in the force couple is:

Force = M_H/L [kN]

where L is the distance between crankshaft level and the middle position of the crosshead guide (i.e. the length of the connecting rod).

As the interaction between engine and hull is at the engine seating and the top bracing positions, this force couple may alternatively be applied in those positions with a vertical distance of (L_Z). Then the force can be calculated as:

$Force_Z = M_H/L_Z$ [kN]

Any other vertical distance may be applied so as to accomodate the actual hull (FEM) model.

The force couple may be distributed at any number of points in the longitudinal direction. A reasonable way of dividing the couple is by the number of top bracing and then applying the forces at those points.

$Force_{Z,\ one\ point} = Force_{Z,\ total}/N_{top\ bracing,\ total}$ [kN]

2025-06-18 - en

X-type guide force moment (M_x)

The X-type guide force moment is calculated based on the same force couple as described above. However, as the deflection shape is twisting the engine, each cylinder unit does not contribute with an equal amount. The centre units do not contribute very much whereas the units at each end contributes much.

A so-called 'Bi-moment' can be calculated (Fig. 17.05.01):

'Bi-moment' = ∑[force-couple(cyl.X) × distX] in kNm^2

The X-type guide force moment is then defined as:

M_X = 'Bi-Moment'/L kNm

For modelling purpose, the size of the four (4) forces can be calculated:

Force = M_X/L_X [kN]

where:

L_X is the horizontal length between 'force points'.

Similar to the situation for the H-type guide force moment, the forces may be applied in positions suitable for the FEM model of the hull. Thus the forces may be referred to another vertical level L_Z above the crankshaft centre line. These forces can be calculated as follows:

$Force_{Z,\ one\ point}$ = (M_x X L) / (L_z X L_x) [kN]

In order to calculate the forces, it is necessary to know the lengths of the connecting rods = L, which are:

2025-06-18 - en

Engine Type	L in mm
G95ME-C10/-GI/-LGI	3,720
G90ME-C10/-GI/-LGI	3,342
S90ME-C9/10/-GI/-LGI	3,600
G80ME-C10/-GI/-LGI	3,530
S80ME-C9/-GI/-LGI	3,450
G70ME-C9/10/-GI/-LGI	3,256
S70ME-C10/-GI/-LGI	2,700
S70ME-C7/8/-GI/-LGI	2,870
S65ME-C8/-GI/-LGI	2,730
G60ME-C10/-GI/-LGI	2,790
S60ME-C10/-GI/-LGI	2,310
G50ME-C9/-GI/-LGI	2,500
S50ME-C9/-GI/-LGI	2,214
S50ME-C8/-GI/-LGI	2,050
S46ME-C8/-GI/-LGI	1,980
G45ME-C9/-GI/-LGI	2,250
S40ME-C9/-GI/-LGI	1,770
S35ME-C9/-GI/-LGI	1,550

2025-06-18 - en

Vibration limits valid for single order harmonics

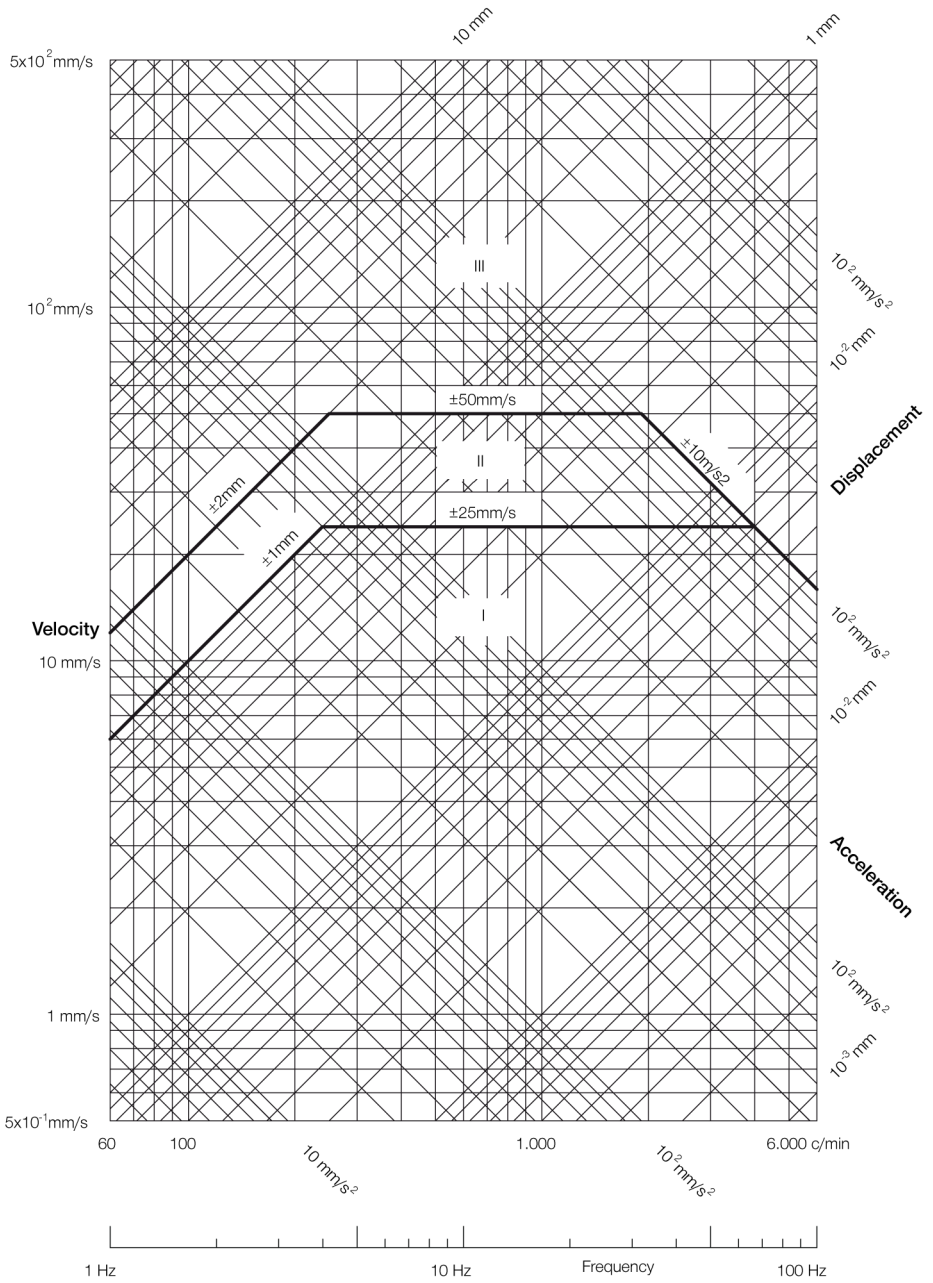

Zone I: Acceptable
Zone II: Vibration will not damage the main engine, however, under adverse conditions, annoying/harmful vibration responses may appear in the connected structures
Zone III: Not acceptable

078 81 27-6.1.0

Fig. 17.05.02: Vibration limits

2025-06-18 - en

This page is intentionally left blank

2025-06-18 - en

Axial and torsional vibrations

When the crank throw is loaded by the gas pressure through the connecting rod mechanism, the arms of the crank throw deflect in the axial direction of the crankshaft, exciting axial vibrations. Through the thrust bearing, the system is connected to the ship's hull.

Generally, only zero-node axial vibrations are of interest. Thus the effect of the additional bending stresses in the crankshaft and possible vibrations of the ship`s structure due to the reaction force in the thrust bearing are to be consideraed.

An axial damper is fitted as standard on all engines, minimising the effects of the axial vibrations.

Torsional vibrations

The reciprocating and rotating masses of the engine including the crankshaft, the thrust shaft, the intermediate shaft(s), the propeller shaft and the propeller are for calculation purposes considered a system of rotating masses (inertias) interconnected by torsional springs. The gas pressure of the engine acts through the connecting rod mechanism with a varying torque on each crank throw, exciting torsional vibration in the system with different frequencies.

In general, only torsional vibrations with one and two nodes need to be considered. The main critical order, causing the largest extra stresses in the shaft line, is normally the vibration with order equal to the number of cylinders, i.e., six cycles per revolution on a six cylinder engine. This resonance is positioned at the engine speed corresponding to the natural torsional frequency divided by the number of cylinders.

The torsional vibration conditions may, for certain installations require a torsional vibration damper.

Plants with 11 or 12-cylinder engines in the bore range 98-80 require a torsional vibration damper.

Based on our statistics, this need may arise for the following types of installation:
- Plants with controllable pitch propeller
- Plants with unusual shafting layout and for special owner/yard requirements
- Plants with 8-cylinder engines.

The so-called QPT (Quick Passage of a barred speed range Technique), is an alternative to a torsional vibration damper, on a plant equipped with a controllable pitch propeller. The QPT could be implemented in the governor in order to limit the vibratory stresses during the passage of the barred speed range.

The application of the QPT, has to be decided by the engine maker and Everllence based on final torsional vibration calculations.

Six-cylinder engines, require special attention. On account of the heavy excitation, the natural frequency of the system with one-node vibration should be situated away from the normal operating speed range, to avoid its effect. This can be achieved by changing the masses and/or the stiffness of the system so as to give a much higher, or much lower, natural frequency, called undercritical or overcritical running, respectively.

2025-06-18 - en

Owing to the very large variety of possible shafting arrangements that may be used in combination with a specific engine, only detailed torsional vibration calculations of the specific plant can determine whether or not a torsional vibration damper is necessary.

Undercritical running

The natural frequency of the one-node vibration is so adjusted that resonance with the main critical order occurs about 35-45% above the engine speed at specified MCR.

Such undercritical conditions can be realised by choosing a rigid shaft system, leading to a relatively high natural frequency.

The characteristics of an undercritical system are normally:
• Relatively short shafting system
• Probably no tuning wheel
• Turning wheel with relatively low inertia
• Large diameters of shafting, enabling the use of shafting material with a moderate ultimate tensile strength, but requiring careful shaft alignment,(due to relatively high bending stiffness)
• Without barred speed range.

Critical running

When running undercritical, significant varying torque at MCR conditions of about 100-150% of the mean torque is to be expected.

This torque (propeller torsional amplitude) induces a significant varying propeller thrust which, under adverse conditions, might excite annoying longitudinal vibrations on engine/double bottom and/or deck house.

The yard should be aware of this and ensure that the complete aft body structure of the ship, including the double bottom in the engine room, is designed to be able to cope with the described phenomena.

Overcritical running

The natural frequency of the one node vibration is so adjusted that resonance with the main critical order occurs at about 30-60% of the engine speed at specified MCR. Such overcritical conditions can be realised by choosing an elastic shaft system, leading to a relatively low natural frequency.

The characteristics of overcritical conditions are:

• Tuning wheel may be necessary on crankshaft fore end

• Turning wheel with relatively high inertia

• Shafts with relatively small diameters, requiring shafting material with a relatively high ultimate tensile strength

• With barred speed range of about ±10% with respect to the critical engine speed.

Torsional vibrations in overcritical conditions may, in special cases, have to be eliminated by the use of a torsional vibration damper.

Overcritical layout is normally applied for engines with more than four cylinders.

2025-06-18 - en

Please note:
We do not include any tuning wheel or torsional vibration damper in the standard scope of supply, as the proper countermeasure has to be found after torsional vibration calculations for the specific plant, and after the decision has been taken if and where a barred speed range might be acceptable.

Governor stability evaluation for special plants

On rare occasions, plant layouts are prone to engine speed instability or “engine hunting”. These plant layouts usually fall within one of the three categories mentioned below. Everllence may require that a governor stability evaluation is carried out for plants in the risk of encountering engine speed instability. The purpose of the governor stability evaluation is to identify the potential risks of engine speed instability and suggest corresponding countermeasures to the plant design. Everllence offers a governor stability evaluation against a fee.

1. Torsional vibrations at low frequency

A low torsional vibration frequency of a slender shaft line may interfere with the engine speed measurement of the engine control system (ECS). The ECS uses the speed measurement to calculate the fuel index, and therefore it directly affects the engine torque. The interference can in worst-case lead to amplification of the vibrations and hunting phenomena.

If the governor stability analysis reveals a risk of interference, the solution is to install an extra speed measurement device on the shaft line for the ECS, a so-called dual tacho.

2. Large electrical power take-off

If the power take-off (PTO) solution includes a variable frequency drive (VFD), which is the norm today, the PTO control system strategy is to deliver the required electrical power independent of the actual engine speed. This control strategy reduces the stability of the engine speed, because a drop in engine speed results in an increase in shaft generator torque to maintain a constant electrical power output. If the destabilisation effect is large, the engine control system is not able to compensate and properly stabilise the engine speed, this could result in engine hunting.

The destabilisation effect is largest at low speeds and at a high level of PTO.

If the governor stability analysis shows an inadequate stability margin, the PTO has to be limited in specific speed ranges, or turning and tuning wheels of higher inertia could be installed.

Usually, it is possible to mitigate the instability by applying our extended interface to the power management system (interface option C). See section 2.03 of the project guide for more information about the use of a PTO and PTO limits.

2025-06-18 - en

3. Operation without propeller

The propeller adds inertia and damping to the system which both increases engine speed stability and torque disturbance rejection. If the propeller is detached, for example by a clutch, the reduced system becomes more volatile. The result is an increased risk of critical speed overshoot and a reduced engine speed stability margin.

Normally, an engine is only allowed to operate in a narrow speed range without a propeller. The speed range is determined as part of the governor stability evaluation.

Plant criteria requiring a governor stability evaluation

If a plant fulfils one of the below criteria, Everllence must be contacted for further analysis, in case a plant fulfils one of the below mentioned criteria. In that case, we will conduct a governor stability evaluation against a fee. These special plants must be handled on an individual basis, preferably at an early stage of the design.

- PTO output is higher than specified in project guide section 2.03
- The engine is operated with PTO at test bed
- 1st node torsional vibration frequency in the propeller shaft line is lower than:
  - 3 Hz for FPP plants
  - 5 Hz for CPP plants
- The design includes a clutch for disconnecting the propeller
- The engine is for other reasons operated without a propeller, for example during PTO tests
- The design deviates from known “standard” plant designs.

The governor stability evaluation can lead to changes in the control equipment. This could, for example, be an increase of signals from the plant and requirements to the design of engine-driven mechanical components. The evaluation can also result in changes in the use of the PTO.

Direct questions regarding the governor stability evaluation at RDCPH@everllence.com.

2025-06-18 - en

External forces and moments

General

This section is available on request

2025-03-26 - en

This page is intentionally left blank

01 Engine Design
02 Engine Layout and Load Diagrams, SFOC, dot 5
03 Turbocharger Selection & Exhaust Gas Bypass
04 Electricity Production
05 Installation Aspects
06 List of Capacities: Pumps, Coolers & Exhaust Gas
07 Fuel
08 Lubricating Oil
09 Cylinder Lubrication
10 Piston Rod Stuffing Box Drain Oil
11 Low-temperature Cooling Water
12 High-temperature Cooling Water
13 Starting and Control Air
14 Scavenge Air
15 Exhaust Gas
16 Engine Control System
17 Vibration Aspects
18 Monitoring Systems and Instrumentation
19 Dispatch Pattern, Testing, Spares and Tools
20 Project Support and Documentation
21 Appendix

This page is intentionally left blank

Monitoring systems and instrumentation

The Engine Control System (ECS) is supported by the Engine Management Services (EMS), which manages software, data and applications for engine monitoring and operation.

The EMS includes the PMI and the CoCoS-EDS (Computer Controlled Surveillance-Engine Diagnostics System) as applications.

In its basic design, the ME/ME-B engine instrumentation consists of:

- Engine Control System (ECS), see Section 16.01
- Shut-down sensors
- EMS including PMI and CoCoS-EDS software and support for LAN-based interface to the AMS, see Section 18.02
- Sensors for alarm, slow down and remote indication according to the classification society's and Everllence' requirements for UMS, see Section 18.04.

All instruments are identified by a combination of symbols and a position number as shown in Section 18.07.

2025-06-18 - en

This page is intentionally left blank

2025-06-18 - en

Engine management services

The Engine Management Services (EMS) is used on Everllence B&W engines from Everllence for condition monitoring, data logging & data distribution. EMS is integrated with the ECS (Engine Control System) to allow for continuous performance tuning.

EMS is executed on the EMS MOP, an industrial type PC designed by Everllence. EMS is implemented as a hardened platform, robust to virus threats and other unauthorized use and ac-cess.

The EMS network topology is shown in Fig. 18.02.01.

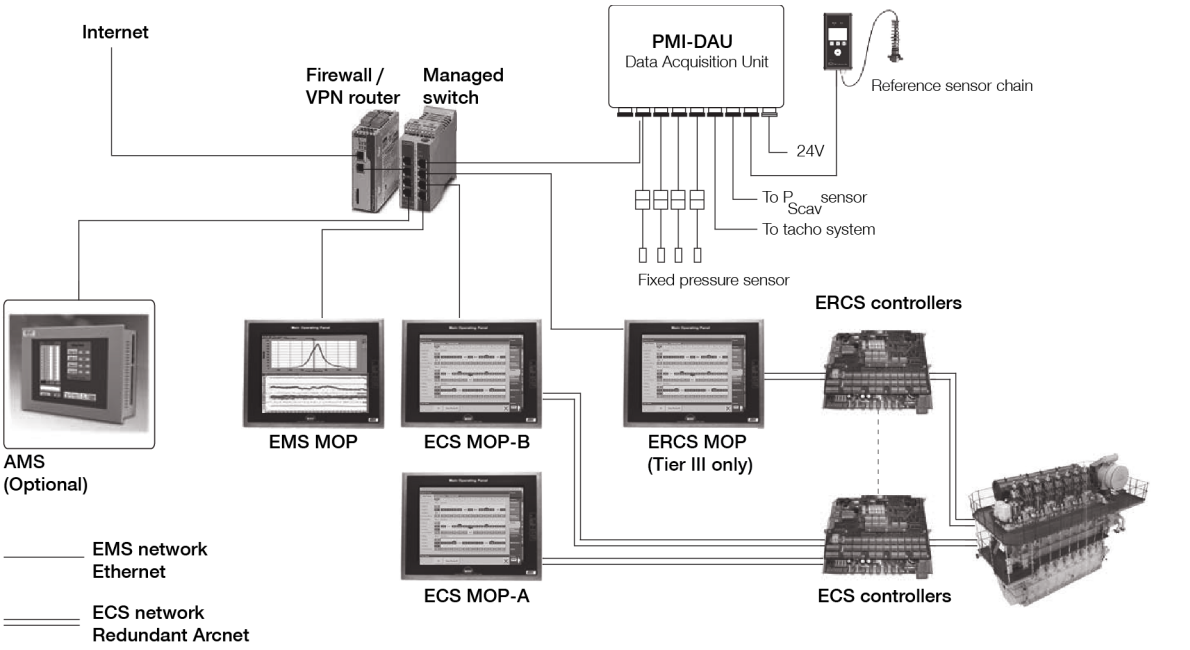

Fig 18.02.01: Engine Management Services, EMS

EMS applications

EMS includes the applications PMI Auto-tuning, CoCoS-EDS and EMS manager.

PMI Auto-tuning

- Online cylinder pressure monitoring
- Input to engine control system for closed-loop performance tuning
- Engine power estimation.

PMI Auto-tuning continuously measures the cylinder pressures using online sensors mounted on each cylinder cover. Pressure measurements are presented continuously in real time and the corresponding key performance values are transferred to the Engine Control System.

The Engine Control System constantly monitors and compares the measured combustion pressures to a reference value. As such, the control system automatically adjusts the fuel injection and valve timing to reduce the deviation

2025-06-18 - en

between the measured values and the reference. This, in turn, facilitates the optimal combustion pressures for the next firing. Thus, the system ensures that the engine is running at the desired maximum pressure, p(max).

CoCoS-EDS

- Data logging
- Engine condition monitoring and reporting
- Engine operation troubleshooting.

With CoCoS-EDS, early intervention as well as preventive maintenance, the engine operators are able to reduce the risk of damages and failures.

CoCoS-EDS further allows for easier troubleshooting in cases where unusual engine behavior is observed.

EMS manager

- Installation and supervision of EMS applications
- Network and interface monitoring
- Optional interface for data exchange with AMS (Alarm Monitoring System).

The EMS manager provides a process for integrated installation, commissioning and maintenance of PMI Auto-tuning and CoCoS-EDS.

Further, the EMS Manager includes status information and functionality, e.g. for network status, internal and external interfaces and EMS application execution.

2025-06-18 - en

Condition monitoring system CoCoS-EDS

This section is not applicable

2025-03-27 - en

This page is intentionally left blank

Slow down and shut down

The shut down system must be electrically separated from other systems by using independent sensors, or sensors common to the alarm system and the monitoring system but with galvanically separated electrical circuits, i.e. one sensor with two sets of electrically independent terminals. The list of sensors are shown in Table 18.04.04.

Basic safety system design and supply

The basic safety sensors for a Everllence B&W engine are designed for Unattended Machinery Space (UMS) and comprises:

- the temperature sensors and pressure sensors that are specified in the 'Everllence' column for shut down in Table 18.04.04.

Alarm and slow down system design and supply

The basic alarm and slow down sensors for a Everllence B&W engine are designed for Unattended Machinery Space (UMS) and comprises:

- The sensors for alarm and slow down.

The shut down and slow down panels can be ordered as options, whereas the alarm panel is yard's supply, as it normally includes several other alarms than those for the main engine.

For practical reasons, the sensors for the engine itself are normally delivered from the engine supplier, so they can be wired to terminal boxes on the engine.

The number and position of the terminal boxes depends on the degree of dismantling specified in the Dispatch Pattern for the transportation of the engine based on the lifting capacities available at the engine maker and at the yard.

Alarm, slow down and remote indication sensors

The International Association of Classification Societies (IACS) indicates that a common sensor can be used for alarm, slow down and remote indication.

A general view of the alarm, slow down and shut down systems is shown in Fig. 18.04.01.

Tables 18.04.02 and 18.04.03 show the requirements by Everllence for alarm and slow down and for UMS by the classification societies (Class), as well as IACS' recommendations.

The number of sensors to be applied to a specific plant is the sum of requirements of the classification society, the Buyer and Everllence.

If further analogue sensors are required, they can be ordered as option.

Slow down functions

The slow down functions are designed to safeguard the engine components against overloading during normal service conditions and to keep the ship manoeuvrable if fault conditions occur.

The slow down sequence must be adapted to the actual plant parameters, such as for FPP or CPP, engine with or without shaft generator, and to the required operating mode.

2025-06-19 - en

Electrical system, general outline

The figure shows the concept approved by all classification societies.

The shut down panel and slow down panel can be combined for some makers.

The classification societies permit having common sensors for slow down, alarm and remote indication.

One common power supply might be used, instead of the three indicated, provided that the systems are equipped with separate fuses.

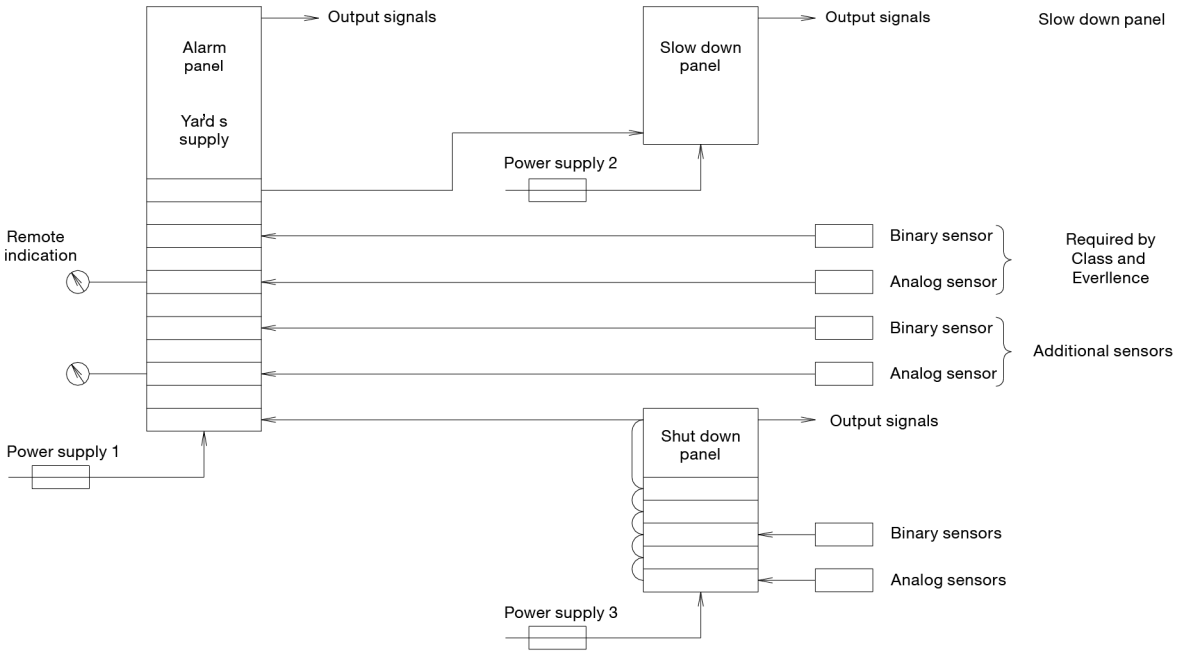

178 30 10-0.8.0

Alarms for UMS – Class and Everllence requirements

ABS	BV	CCS	DNV	KR	LR	NK	RINA	RS	IACS	EVR	Sensor and function	Point of location
												Fuel oil
1	1	1	1	1	1	1	1	1	1	1	PT 8001 A	Fuel oil, inlet engine
1	1	1	1	1	1	1	1	1	1	1	LS 8006 A	Leakage from high pressure pipes
												Lubricating oil
1	1	1	1	1	1	1	1	1	1	1	TT 8106 A	Thrust bearing segment
1	1	1	1	1	1	1	1	1	1	1	PT 8108 A	Lubricating oil inlet to main engine
1	1	1	1	1		1	1	1	1	1	TT 8113 A	Piston cooling oil outlet/cylinder
1	1	1	1	1		1	1	1	1	1	FS 8114 A	Piston cooling oil outlet/cylinder
										1	TT 8117 A	Turbocharger lubricating oil outlet/turbocharger
										1	TE 8123 A	Main bearing oil outlet temperature/main bearing (40- and 35-bores)
										1	XC 8126 A	Bearing wear (All types except 40- and 35-bores); sensor common to XC 8126/27
										1	XS 8127 A	Bearing wear detector failure (All types except 40- and 35-bores)
		1			1	1				1	PDS 8140 A	Lubricating oil differential pressure - cross filter
										1	XS 8150 A	Water in lubricating oil; sensor common to XS 8150/51/52
										1	XS 8151 A	Water in lubricating oil - too high
										1	XS 8152 A	Water in lubricating oil sensor not ready
												Everllence B&W Alpha Lubrication
										1	TE 8202 A	Cylinder lubricating oil temperature
										1	LS 8212 A	Small tank for heating element, low level (Not for ACOM)
										1	XC 8265 A	ACOM common alarm (Only for ACOM)

1. Indicates that the sensor is required.
The sensors in the Everllence and relevant Class columns are included in the basic delivery.

2025-06-19 - en

The sensor identification codes and functions are listed in Table 18.07.01. The tables are liable to change without notice, and are subject to latest Class requirements.

Table 18.04.02a: Alarm functions for UMS

2025-06-19 - en

Alarms for UMS – Class and Everllence requirements

ABS	BV	CCS	DNV	KR	LR	NK	RINA	RS	IACS	EVR	Sensor and function	Point of location
												Hydraulic Power Supply
										1	PT 1228 A	LPS booster, oil presure after pump (Only if LPS pump)
										1	PDS 1231 A	ME (Auto) filter differential pressure across filter
										1	TT 1310 A	Lubrication oil inlet (Only for ME/-GI with separate oil system to HPS installed)
												Cooling water
1	1	1	1	1	1	1	1	1	1	1	PT 8401 A	Jacket cooling water inlet
										1	PDT 8403 A	Jacket cooling water across engine; to be calculated in alarm system from sensor no. 8402 and 8413 3)
										1	PDT 8404 A	Jacket cooling water across cylinder liners 2)
										1	PDT 8405 A	Jacket cooling water across cylinder covers and exhaust valves 2)
										1	TT 8407 A	Jacket cooling water inlet
1	1	1	1	1	1	1	1	1	1	1	1 TT 8408 A	Jacket cooling water outlet, cylinder
										1	TT 8410 A	Cylinder cover cooling water outlet, cylinder 2)
										1	PT 8413 I	Jacket cooling water outlet, common pipe
1	1	1		1	1	1	1	1	1	1	PT 8421 A	Cooling water inlet air cooler

2025-06-19 - en

										1	TT 8422 A	Cooling water inlet air cooler/air cooler
												Compressed air
1	1	1		1	1	1	1	1	1	1	PT 8501 A	Starting air inlet to main starting valve
1	1	1	1	1	1	1	1+	1	1	1	PT 8503 A	Control air inlet and finished with engine
			1							1	PT 8505 A	Air inlet to air cylinder for exhaust valve
												Scavenge air
								1		1	PS 8604 A	Scavenge air, auxiliary blower, failure (Only ME-B)
		1				1÷				1	TT 8609 A	Scavenge air receiver
1	1	1	1	1	1	1	1	1	1	1	TT 8610 A	Scavenge air box – fire alarm, cylinder/cylinder
1	1	1		1	1	1	1	1	1	1	LS 8611 A	Water mist catcher – water level

1. Indicates that the sensor is required.
The sensors in the Everllence and relevant Class columns are included in the basic delivery.
The sensor identification codes and functions are listed in Table 18.07.01.
The tables are liable to change without notice, and are subject to latest Class requirements.

2. Required only for engines wirh LDCL cooling water system.

3. Not applicable for engines with LDCL cooling water system.

Select one of the alternatives

\+ Alarm for high pressure, too

÷ Alarm for low pressure, too

Table 18.04.02b: Alarm functions for UMS

2025-06-19 - en

Alarms for UMS – Class and Everllence requirements

ABS	BV	CCS	DNV	KR	LR	NK	RINA	RS	IACS	EVR	Sensor and function	Point of location
												Exhaust gas
1	1	1	1	1	(1)	1	1	1	1	1	TT8701 A	Exhaust gas before turbocharger/turbocharger
1	1		1	1	1	1	1	1	1	1	TT8702 A	Exhaust gas after exhaust valve, cylinder/cylinder
1	1	1	1	1	1	1	1	1	1		TT8707 A	Exhaust gas outlet turbocharger/turbocharger (Yard's supply)
												Miscellaneous
										1	ZT8801 A	Turbocharger speed/ turbocharger
										1	WT8812 A	Axial vibration monitor 2)
1	1		1	1	1	1	1	1	1	1	XS8813 A	Oil mist in crankcase/ cylinder; sensor common to XS 8813/14
	1									1	XS8814 A	Oil mist detector failure
										1	XC8816 A	Shaftline earthing device
										1	TT8820 A	Cylinder liner monitoring/cylinder 3)
												Engine Control System
1	1	1	1	1	1	1	1	1	1	1	XC2201 A	Power failure
1	1		1		1	1	1	1	1	1	XC2202 A	ME common failure
										1	XC2202-AA	ME common failure (ME-GI only)
										1	XC2213 A	Double-pipe HC alarm (ME-GI only)
												Power Supply Units to Alarm System
										1	XC2909	Main supply failure
										1	XC2910	Battery discharging
										1	XC2911	Battery protective device tripped

1. Indicates that the sensor is required.
The sensors in the Everllence and relevant Class columns are included in the basic delivery.

2025-06-19 - en

The sensor identification codes and functions are listed in Table 18.07.01. The tables are liable to change without notice, and are subject to latest Class requirements.

(1) May be combined with TC 8702 AH where turbocharger is mounted directly on the exhaust manifold.

2) Required for certain engines only, see the list in Section 18.06, Axial Vibration Monitor.

3) Required for: K98ME/ME-C, S90ME-C, K90ME-C and K80ME-C9 engines incl. ME-GI variants.

Alarm for overheating of main, crank and crosshead bearings.

Table 18.04.02c: Alarm functions for UMS

2025-06-19 - en

Slow down for UMS - Class and Everllence requirements

ABS	BV	CCS	DNV	KR	LR	NK	RINA	RS	IACS	EVR	Sensor & function	Point of location
1	1	1	1	1	1	1	1	1	1	1	TT 8106 Y	Thrust bearing segment
1	1	1	1	1	1	1	1	1	1	1	PT 8108 Y	Lubricating oil inlet to main engine
1	1	1	1	1		1	1	1	1	1	TT 8113 Y	Piston cooling oil outlet/cylinder
1	1	1	1	1	1	1	1	1	1	1	FS 8114 Y	Piston cooling oil outlet/cylinder
1	1	1		1	1		1	1	1	1	TT 8117 Y	Turbocharger lubricating oil outlet/ TC
										1	TE 8123 Y	Main bearing oil outlet temp./main bearing
										1	XC 8126 A	Bearing wear
1	1	1	1	1	1	1	1	1	1	1	PT 8401 Y	Jacket cooling water inlet
										1	PDT 8403 Y	Jacket cooling water across engine (not LDCL)
										1	PDT 8404 Y	Jacket cooling water across en-gine(only LDCL)
										1	PDT 8405 Y	Jacket cooling water across cyl. covers and exhaust valves (Only LDCL)
1	1	1	1	1	1	1	1	1	1	1	TE 8408 Y	Jacket cooling water outlet
		1				1				1	TE 8609 Y	Scavenge air receiver
1	1	1	1	1	1	1	1	1	1	1	TE 8610 Y	Scavenge air box fire alarm
		1	1					1		1	TC 8701 Y	Exhaust gas before TC
1	1		1	1	1	1	1	1	1	1	TT 8702 Y	Exhaust gas after exhaust valve
			1							1	TT 8702 Y	Exhaust gas after exhaust valve, cylinder deviation from average
										1	ZT 8801 Y	Turbocharger overspeed
										1	WT 8812 Y	Axial vibration monitor 2)
1	1	1	1	1	1	1	1	1	1	1	XS 8813 Y	Oil mist in crankcase/cylinder
										1	TT 1310 Y	Lubricating oil inlet (only ME-GI w. separate HPS)

1. Indicates that the sensor is required.
The sensors in the Everllence and relevant Class columns are included in the basic delivery.
The sensor identification codes and functions are listed in Table 18.07.01.
The tables are liable to change without notice, and are subject to latest Class requirements.

2) Required for certain engines only, see the list in Section 18.06, Axial Vibration Monitor.

2025-06-19 - en

Table 18.04.03: Slow down functions for UMS

Shut down for AMS and UMS - Class and Everllence requirements

ABS	BV	CCS	DNV	KR	LR	NK	RINA	RS	IACS	EVR	Sensor & function	Point of location
1	1	1	▢	1	1	1	1	1	1	1	PS/PT 8109 Z	Lubricating oil inlet to main engine and thrust bearing
1	1	1	▢	1	1	1	1	1	1	1	ZT 4020 Z	Engine overspeed
1	1	1		1			1	1	1	1	TE/TS 8107 Z	Thrust bearing segment
										1	XS 8817 Z	Turbocharger overspeed (only in case of EGR or EGB, VT TC, power turbine/hybrid TC, TC cut-out and system handshake, see table 18.06.03

1. Indicates that the sensor is required.

- The sensors in the Everllence and relevant Class columns are included in the basic delivery.

  The sensor identification codes and functions are listed in Table 18.07.01.

  The tables are liable to change without notice, and are subject to latest Class requirements.

▢ Or alarm for overheating of main, crank and crosshead bearings or slow down

Se also table 18.04.03: Slow down functions for UMS.

Table 18.04.04: Shut down functions for AMS and UMS

2025-06-19 - en

International Association of Classification Societies

The members of the International Association of Classification Societies, IACS, have agreed that the stated sensors are their common recommendation, apart from each Class' requirements.

The members of IACS are:

ABS	American Bureau of Shipping
BV	Bureau Veritas
CCS	China Classification Society
DNV	Det Norske Veritas
KR	Korean Register
LR	Lloyd's Register
NK	Nippon Kaiji Kyokai
RINA	Registro Italiano Navale
RS	Russian Maritime Register of Shipping

2025-06-19 - en

This page is intentionally left blank

2025-06-19 - en

Local instruments

The basic local instrumentation on the engine comprises thermometers, pressure gauges and other indicators located on the piping or mounted on panels on the engine. The tables 18.05.01a, b and c list those as well as sensors for slow down, alarm and remote indication.

Local instruments	Remote sensors	Point of location
Thermometer, stem type	Temperature element/switch	
		Hydraulic power supply
	TE 1270	HPS bearing temperature (Only ME/ME-C with HPS in centre position)
		Fuel oil
TI 8005	TE 8005	Fuel oil, inlet engine
		Lubricating oil
TI 8106	TE 8106	Thrust bearing segment
	TE/TS 8107	Thrust bearing segment
TI 8112	TE 8112	Lubricating oil inlet to main engine
TI 8113	TE 8113	Piston cooling oil outlet/cylinder
TI 8117	TE 8117	Lubricating oil outlet from turbocharger/turbocharger (depends on turbocharger design)
	TE 8123	Main bearing oil outlet temperature/main bearing (S40/35ME-B9 only)
		Cylinder lubricating oil
	TE 8202	Cylinder lubricating oil inlet
	TS 8213	Cylinder lubricating heating
		High temperature cooling water, jacket cooling water
TI 8407	TE 8407	Jacket cooling water inlet
TI 8408	TE 8408	Jacket cooling water outlet, cylinder/cylinder
TI 8409	TE 8409	Jacket cooling water outlet/turbocharger
TI 8410	TT 8410	Cylinder cover cooling water outlet, cylinder (Only for LDCL)
		Low temperature cooling water, seawater or freshwater for central cooling
TI 8422	TE 8422	Cooling water inlet, air cooler
TI 8423	TE 8423	Cooling water outlet, air cooler/air cooler
		Scavenge air
TI 8605	TE 8605	Scavenge air before air cooler/air cooler
TI 8608	TE 8608	Scavenge air after air cooler/air cooler
TI 8609	TE 8609	Scavenge air receiver
	TE 8610	Scavenge air box – fire alarm, cylinder/cylinder
Thermometer, dial type	Thermo couple	
		Exhaust gas
TI 8701	TC 8701	Exhaust gas before turbocharger/turbocharger
	TI/TC 8702	Exhaust gas after exhaust valve, cylinder/cylinder
	TC 8704	Exhaust gas inlet exhaust gas receiver
TI 8707	TC 8707	Exhaust gas outlet turbocharger

Table 18.05.01a: Local thermometers on engine, and remote indication sensors

2025-03-27 - en

Local instruments	Remote sensors	Point of location
Pressure gauge (manometer)	Pressure transmitter/switch	
		Fuel oil
PI 8001	PT 8001	Fuel oil, inlet engine
		Lubricating oil
PI 8103	PT 8103	Lubricating oil inlet to turbocharger/turbocharger
PI 8108	PT 8108	Lubricating oil inlet to main engine
	PS/PT 8109	Lubricating oil inlet to main engine and thrust bearing
	PDS 8140	Lubricating oil differential pressure – cross filter
		High temperature jacket cooling water, jacket cooling water
PI 8401	PT 8401	Jacket cooling water inlet
	PS/PT 8402	Jacket cooling water inlet (Only Germanischer Lloyd)
	PDT 8403	Jacket cooling water across engine (or PT 8401 and PT 8413) (Not for LDCL)
	PDT 8404	Jacket cooling water across cylinder liners (Only for LDCL)
	PDT 8405	Jacket cooling water across cylinder covers and exhaust valves (Only for LDCL)
	PT 8413	Jacket cooling water outlet, common pipe
		Low temperature cooling water, seawater or freshwater for central cooling
PI 8421	PT 8421	Cooling water inlet, air cooler
		Compressed air
PI 8501	PT 8501	Starting air inlet to main starting valve
PI 8503	PT 8503	Control air inlet
	PT 8505	Air inlet to air cylinder for exhaust valve (Only ME-B)
		Scavenge air
PI 8601	PT 8601	Scavenge air receiver (PI 8601 instrument same as PI 8706)
PDI 8606	PDT 8606	Pressure drop of air across cooler/air cooler
		Exhaust gas
PI 8706		Exhaust gas receiver/Exhaust gas outlet turbocharger
		Miscellaneous functions
PI 8803		Air inlet for dry cleaning of turbocharger
PI 8804		Water inlet for cleaning of turbocharger (Not applicable for MHI turbochargers) Table

Table 18.05.01b: Local pressure gauges on engine, and remote indication sensors

2025-03-27 - en

Local instruments	Remote sensors	Point of location
Other indicators	Other transmitters/ switches	
		Hydraulic power supply
	XC 1231	Automatic main lube oil filter, failure (Boll & Kirch)
	LS 1235	Leakage oil from hydraulic system
		Engine cylinder components
	LS 4112	Leakage from hydraulic cylinder unit
		Fuel oil
	LS 8006	Leakage from high pressure pipes
		Lubricating oil
	FS 8114	Piston cooling oil outlet/cylinder
	XC 8126	Bearing wear (All types except S40/35ME-B9)
	XS 8127	Bearing wear detector failure (All types except S40-35ME-B9)
	XS 8150	Water in lubricating oil
	XS 8151	Water in lubricating oil – too high
	XS 8152	Water in lubricating oil sensor not ready
		Cylinder lube oil
	LS 8212	Small tank for heating element, low level (Not for ACOM)
	XC 8265	ACOM (Only for ACOM)
	LS 8285	Level switch
		Scavenge air
	LS 8611	Water mist catcher – water level
		Miscellaneous functions
	ZT 8801 I	Turbocharger speed/turbocharger
WI 8812	WT 8812	Axial vibration monitor (For certain engines only, see note in Table 18.04.04) (WI 8812 instrument is part of the transmitter WT 8812)
	XS 8813	Oil mist in crankcase/cylinder
	XS 8814	Oil mist detector failure
	XC 8816	Shaftline earthing device
	XS/XT 8817	Turbocharger overspeed (Only in case of EGB, VT TC, power turbine/ hybridTC, TC Cut-out, see Table 18.06.03)

Table 18.05.01c: Other indicators on engine, and remote indication sensors

2025-03-27 - en

This page is intentionally left blank

2025-03-27 - en

Engine protection systems and alarms

Drain box for fuel oil leakage alarm

Any leakage from the high-pressure fuel oil pipes of a cylinder is directed to a common drain box for all cylinders, which is equipped with a level alarm. This is included in the basic design of Everllence B&W engines.

Bearing condition monitoring

Based on our experience, we decided in 1990 that all plants must include an oil mist detector (OMD) specified by Everllence. Since then, the OMD and, optionally, a bearing temperature monitoring (BTM) equipment have made up the warning arrangements for prevention of crankcase explosions on two-stroke engines. Both warning systems are approved by the classification societies.

To achieve a response to damage, which is faster than possible with oil mist detection and bearing temperature monitoring, we introduced bearing wear monitoring (BWM) systems. By monitoring the actual bearing wear continuously, mechanical damage to the crank-train bearings (main, crank, and crosshead bearings) can be predicted in time to react and avoid damaging the journal and bearing housing.

Oil mist detector

The OMD system constantly measures samples of the atmosphere in the crankcase compartments and registers the results on an optical measuring track, where the opacity (degree of haziness) is compared with the opacity of the atmospheric air. If an increased difference is recorded, a slowdown is activated (Germanischer Lloyd requires a shutdown).

Furthermore, for shop trials, Everllence requires that the OMD is connected to the shutdown system. For personnel safety, the oil mist detectors and related equipment are located on the manoeuvring side of the engine.

The following oil mist detectors are available:

Graviner Mk 7, make:	Kidde Fire Protection
Visatron VN 215/93, make:	Schaller Automation GmbH & Co. KG *)
MD-SX, make:	Daihatsu Diesel Mfg. Co., Ltd.
Vision III C, make:	Specs Corporation
GDMS-OMDN09, make:	MSS AG
Triton, make:	Heinzmann GmbH & Co. KG
Visatron VN301^{plus}, make:	Schaller Automation GmbH & Co. KG
KG MOT-2R5M7R5MP, make:	Meiyo Electric Co., Ltd.

*) Only applicable for S50ME-C/-GI/-LGI and smaller.

For reference, Figs. 18.06.01a and 18.06.01b show examples of piping diagrams (for Visatron VN 215/93 only) and wiring diagrams (for all other detectors).

2025-06-18 - en

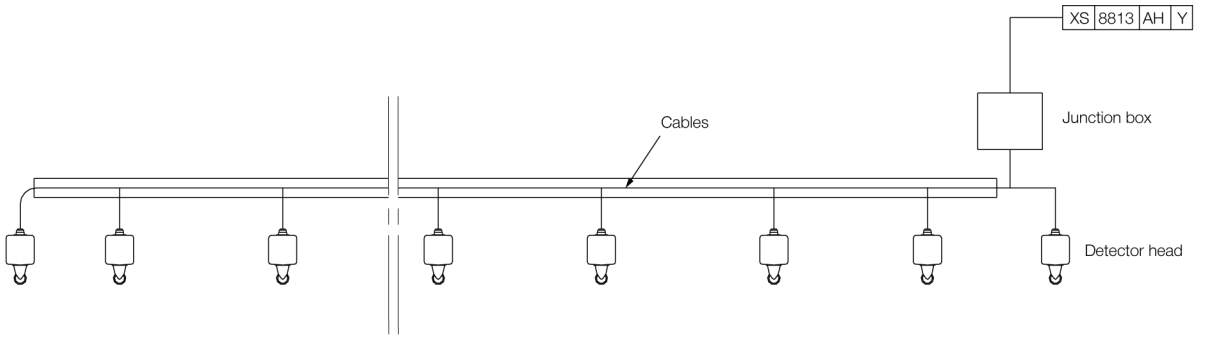

178 49 80-9.3.0

Fig. 18.06.01a: Example of oil mist detector wiring on the engine

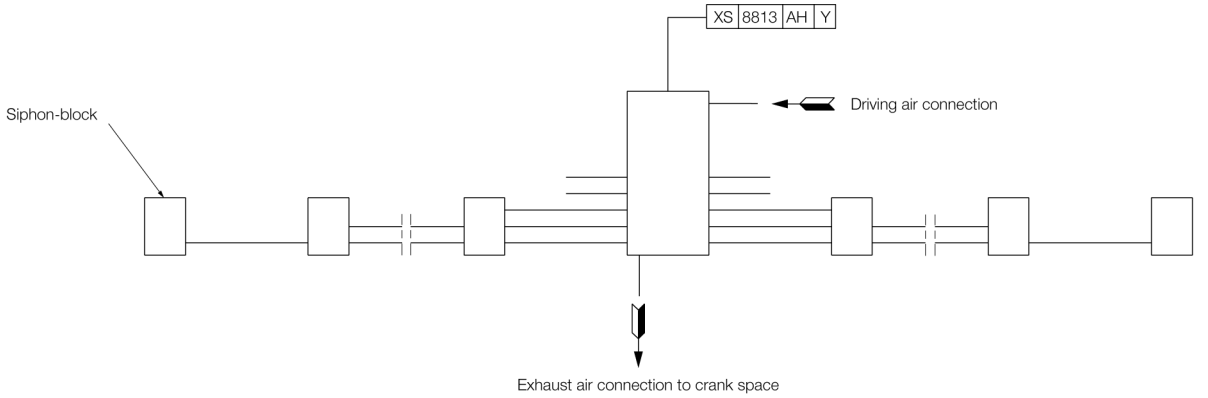

178 49 81-0.3.0

Fig. 18.06.01b: Oil mist detector pipes on the engine, type Visatron VN215/93 from Schaller Automation

Bearing wear monitoring system

The BWM system monitors all three principal crank-train bearings using two proximity sensors (forward/aft) per cylinder unit, which are placed inside the frame box.

Continuously targeting the guide shoe bottom ends, these sensors measure the distance to the crosshead in bottom dead centre (BDC). Signals are processed and digitally transmitted to computer hardware, which then presents an easily interpretable interface to the user.

The measuring precision is more than adequate to obtain an alarm well before steel-to-steel contact occurs in the bearings. Also the long-term stability of the measurements has proven to be excellent. In fact, BWM is expected to provide long-term wear data at a better precision and reliability than the manual vertical clearance measurements normally performed by the crew during regular service checks.

For the above reasons, we consider unscheduled open-up inspections of the crank-train bearings to be superfluous, given that a BWM system has been installed.

2025-06-18 - en

Two BWM ‘high-wear’ alarm levels, including a deviation alarm, apply. The first level of the high-wear/deviation alarm is indicated in the alarm panel only, while the second level also activates a slowdown.

The BWM options are:

XTS–W (BWM), make:	AMOT
BDMS (BW&TMS), make:	Dr. E. Horn
BWCM, make:	Kongsberg Maritime
B-WACS, make:	Doosan Engine Co., Ltd.
BWCMS, make:	KOMECO
BCM-1, make:	Mitsui Zosen Systems Research Inc.

ME, ME-C/-GI/-LGI engines are as standard specified with BWM and any of the above options can be chosen.

Bearing temperature monitoring system

The BTM system continuously monitors the temperature of main, crank pin, and crosshead bearings. Some systems measure the temperature on the backside of the bearing shell directly, other systems measure by sampling a small part of the return oil from each bearing in the crankcase.

If a specified temperature is recorded, it triggers either a bearing shell/housing temperature alarm, or a bearing oil outlet temperature alarm.

In main bearings, the shell/housing temperature, or the oil outlet temperature is monitored, depending on how the temperature sensor of the BTM system is installed.

In crank pin and crosshead bearings, the shell/housing temperature, or the oil outlet temperature is monitored, depending on which BTM system is installed.

For the shell/housing temperature in main, crank pin, and crosshead bearings, two high-temperature alarm levels apply. The first level alarm is indicated in the alarm panel while the second level activates a slowdown.

For oil outlet temperatures in main, crank pin and crosshead bearings, two high-temperature alarm levels, including a deviation alarm, apply. The first level of the high temperature/deviation alarm is indicated in the alarm panel, while the second level activates a slowdown.

The three temperature measuring options are:

- Temperature sensors fitted to main bearings
- Temperature sensors fitted to main bearings, crank pin bearings, crosshead bearings and to the moment compensator, if any
- Temperature sensors fitted to main bearings, crank pin bearings, and crosshead bearings.

Water in oil monitoring system

All Everllence B&W engines are as standard specified with a water in oil monitoring (WIOM) system to detect and avoid free water in the lubricating oil.

2025-06-18 - en

If the lubricating oil becomes contaminated with an amount of water exceeding our limit of 50% of the saturation point (corresponding to approx. 0.2% water content), acute corrosive wear of the crosshead bearing overlayer may occur. The higher the water content, the faster the wear rate.

To prevent water from accumulating in the lubricating oil and damaging the bearings, the oil should be monitored manually, or automatically with a WIOM system connected to the engine alarm and monitoring system. If a water contamination occurs, the source should be found and the equipment inspected and repaired accordingly.

The saturation point of the water in the lubricating oil varies depending on the age of the lubricating oil, the degree of contamination, and the temperature. For this reason, we have chosen to specify the water activity (a_w) measuring principle and the aw-type sensor. Among the available methods for measuring a water content in the lubricating oil, only the aw-type sensor measures the relationship between the water content and the saturation point, regardless of the properties of the lubricating oil.

WIOM systems with an aw-type sensor measure water activity expressed in 'aw' on a scale from 0 to 1. Here, '0' indicates oil, which is free of water, and '1' indicates oil saturated with water.

Alarm levels are specified as follows:

Engine condition	Water activity (a_w)
High alarm level	0.5
High High alarm level	0.9

The a_w = 0.5 alarm level gives sufficient margin to the saturation point to avoid free water in the lubricating oil. If the a_w = 0.9 alarm level is reached within a short time after the a_w = 0.5 alarm, this may be an indication of a water leak into the lubricating oil system.

Note that corrosion of the overlayer is a potential problem only for crosshead bearings, because these are designed with an overlayer. Main, thrust, and crank pin bearings may also suffer irreparable damage from water contamination, but the damage mechanism would be different and not as acute.

Liner wall monitoring system

The liner wall monitoring (LWM) system monitors the temperature of each cylinder liner. The LWM system includes two sensors placed in the manoeuvring and exhaust side of the liners, near the piston skirt top dead centre (TDC) position. The sensors are interfaced to the ship alarm system, which monitors the liner temperatures.

If the cylinder oil film indicates early signs of breakdown, the LWM tool will provide the engine room crew the possibility to react with appropriate countermeasures. In doing so, the LWM system can assist the crew in the recognition phase and help avoiding consequential scuffing of the cylinder liner and piston rings.

The signs of oil film breakdown in a cylinder liner are increased and fluctuating temperatures. Therefore, recording a preset maximum allowable absolute temperature for the individual cylinder, or a maximum allowed deviation from a calculated average of all sensors will trigger a cylinder liner temperature alarm.

2025-06-18 - en

For each individual engine, the maximum and deviation alarm levels are optimised by monitoring the temperature level of each sensor during normal service operation and setting the levels accordingly.

The temperature data should be logged on a PC for a minimum of one week. Ideally, it should be recorded for the entire duration of a round trip to monitor the temperature development.

Axial vibration monitor

An axial vibration monitor is available as an option, which includes an indication of a condition check of the axial vibration damper and terminals for alarm and slowdown. For a functional check of the vibration damper, a mechanical guide is installed. As an option, an electronic vibration monitor can be supplied.

The AVM is required for all ME-C10/9 engines, incl. their -GI, and -LGI variants.

The alarm and slowdown system should include the filtration necessary to prevent the AVM from unintentionally activating the alarm and slowdown functions at torsional vibration resonances, i.e. in the barred speed range, and when running astern.

In the low speed range and when running astern, the alarm and slowdown functions are to be disabled so that the AVM only gives an indication of the vibration level.

The AVM alarm and slowdown functions must be enabled when the engine is running ahead and at speeds above the barred range.

To prevent rapid hunting of the engine speed in a slowdown situation, a holding time function has been introduced to delay the automatic resetting of the slowdown function.

The specification of the AVM interface to the alarm and slowdown system is available from Everllence, Copenhagen.

Load dependent cylinder liner cooling water system

With the load dependent cylinder liner (LDCL) cooling water system, the cooling water outlet temperature from the cylinder liner is controlled relative to the engine load, independent of the cooling water outlet from the cylinder cover.

The interval for the liner outlet temperature may be wide, for example from 70 to 130°C. Each cylinder liner has a sensor, which measures the cooling water outlet temperature.

For monitoring the LDCL cooling water system, the following alarm and slowdown functionality must be fulfilled:

Using one common analogue sensor, the alarm system must be able to detect two alarm limits and two slowdown limits:

- Upper slowdown limit
- Upper alarm limit
- Load dependent slowdown limit
- Load dependent alarm limit.

Fig. 18.06.02 shows an example of the limits.

2025-06-18 - en

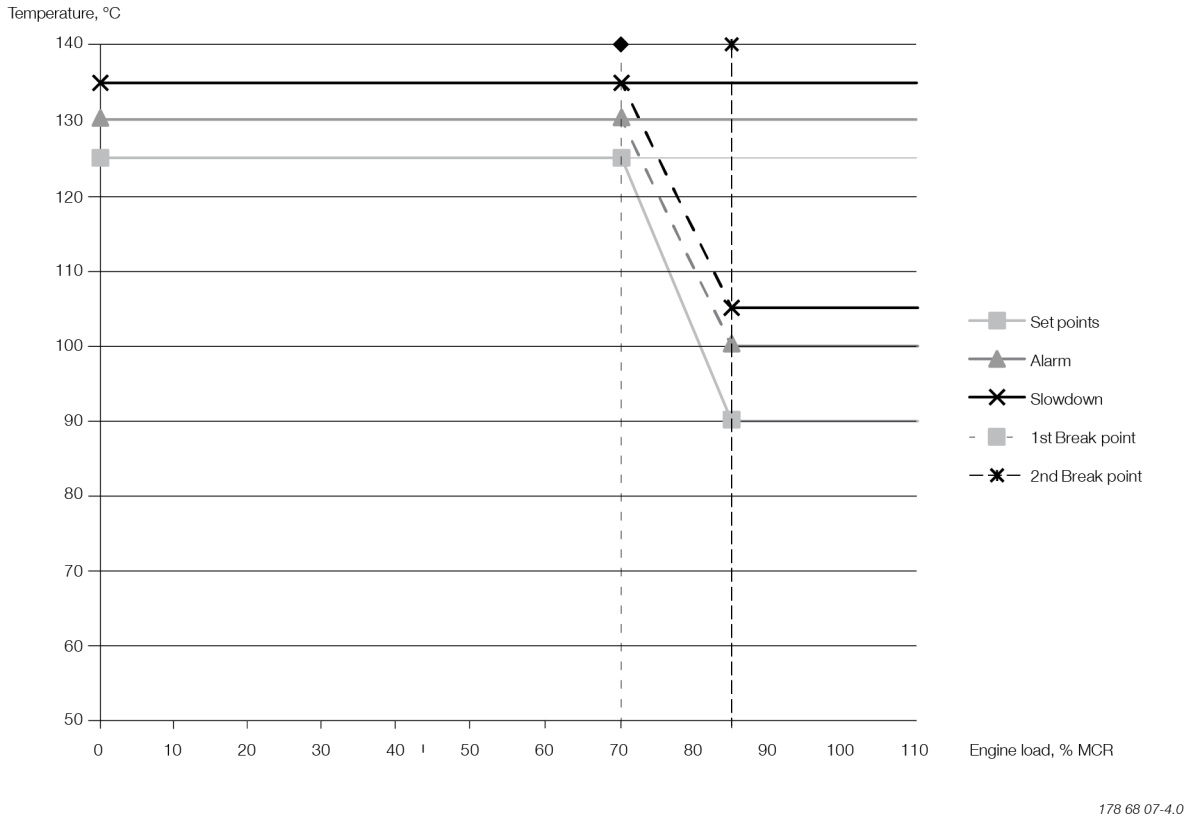

Fig. 18.06.02: Example of setpoints versus slowdown and alarm limits for an LDCL cooling water system

The load dependent limits must include at least one breakpoint to allow cut-in/-out of the lower limits. The upper limits are fixed limits without breakpoints.

The values of the load dependent limits are defined as a temperature difference (ΔT) to the actual cooling water temperature (which varies relative to the engine load).

The cooling water temperature is plant dependent and consequently, the actual values of both upper limits and load dependent limits are defined during commissioning of the engine.

All 95-50ME-C10/9/-GI/-LGI are as standard specified with an LDCL cooling water monitoring system.

Motor start method

Direct online start (DOL) is required for all the electric motors for the pumps in the LDCL cooling water system to ensure proper operation under all conditions.

Turbocharger overspeed protection

All engine plants fitted with turbocharger cut-out, exhaust gas bypass (EGB), power turbine/turbo generator, hybrid turbocharger, or variable turbocharger may experience turbocharger overspeed. To protect the turbocharger, such plants must be equipped with a turbocharger overspeed alarm and slowdown function. However, the handshake interface between the ship's power man-

2025-06-18 - en

agement system and a waste heat recovery system (WHRS), or a shaft generator may delay the slowdown for up to 120 s. Therefore, the slowdown function must be upgraded to a non-cancellable shutdown for engine plants with handshake interface.

On engine plants designed with exhaust gas recirculation (EGR), a sudden increase of energy to the turbocharger(s) will occur if the EGR system trips. As protection, a turbocharger overspeed alarm and a non-cancellable slowdown must be fitted. Consequently, the ship alarm system and the safety system(s) must monitor the turbocharger speed and trigger a slowdown or a non-cancellable shutdown, if the turbocharger speed exceeds the defined alarm levels.

Table 18.06.03 summarises the protection applicable for individual engine plants and power management configurations.

Turbocharger overspeed protection		
Engine plant configuration	No power management system handshake	Engine with WHR or shaft generator with power management system handshake
Traditional exhaust gas train and turbocharger	No monitoring of turbocharger overspeed	No monitoring of turbocharger overspeed
Exhaust gas bypass, variable turbo charger, power turbine, or hybrid turbocharger	Turbocharger overspeed slowdown	Turbocharger overspeed shutdown
Exhaust gas recirculation	Turbocharger overspeed slowdown	Turbocharger overspeed shutdown
Turbocharger cut-out	Turbocharger overspeed slowdown	Turbocharger overspeed shutdown

Table 18.06.03: Turbocharger overspeed protection for individual engine plant configurations

2025-06-18 - en

Control devices

The control devices include a position switch (ZS), or a position transmitter (ZT), and solenoid valves (ZV), which are listed in Table 18.06.04. The sensor identification codes are listed in Table 18.07.01.

Sensor	Point of location
	Manoeuvring system
ZS 1109-A/B C	Turning gear – disengaged
ZS 1110-A/B C	Turning gear – engaged
ZS 1111-A/B C	Main starting valve – blocked
ZS 1112-A/B C	Main starting valve – in service
ZV 1114 C	Slow turning valve
ZS 1116-A/B C	Start air distribution system – in service
ZS 1117-A/B C	Start air distribution system – blocked
ZV 1120 C	Activate pilot pressurised air to starting valves
ZS 1121-A/B C	Activate main starting valves - open
E 1180	Electric motor, auxiliary blower
E 1181	Electric motor, turning gear
E 1185 C	Local operator panel (LOP)
	Hydraulic power supply
PT 1201-1/2/3 C	Hydraulic oil pressure, after non-return valve
ZV 1202-A/B C	Force-driven pump bypass
PS/PT 1204-1/2/3 C	Lubricating oil pressure after filter, suction side
	Tacho/crankshaft position
ZT 4020	Tacho for safety
	Engine cylinder components
XC 4108 C	ELVA NC valve
ZT 4111 C	Exhaust valve position
ZT 4114 C	Fuel plunger, position 1
	Fuel oil
ZV 8020 Z	Fuel oil cut-off at engine inlet (shutdown), Germanischer Lloyd only
	Cylinder lubricating oil, Alpha/ME lubricator
ZV 8281 C	Solenoid valve, lubricator activation
ZT 8282 C	Feedback sensor, lubricator feedback
	Cylinder lubricating oil, Alpha Mk 2 lubricator

2025-06-18 - en

XC 8288 C	Proportional valve
ZT 8289 C	Feedback sensor
	Scavenge air
PS 8603 C	Scavenge air receiver, auxiliary blower control
	ME-GI alarm system (ME-GI only)
XC 2212	External gas shutdown (request)
	ME-GI safety system (ME-GI only)
XC 2001	Engine shutdown (command)
XC 6360	Gas plant shutdown (command)

Table 18.06.04: Control devices on the engine

2025-06-18 - en

This page is intentionally left blank

2025-06-18 - en

Identification of instruments

Measured or Indicating Variables

The instruments and sensors are identified by a position number which is made up of a combination of letters and an identification number.

First letters:

DS	Density switch
DT	Density transmitter
E	Electrical component
FS	Flow switch
FT	Flow transmitter
GT	Gauging transmitter, index/load transmitter
LI	Level indication, local
LS	Level switch
LT	Level transmitter
PDI	Pressure difference indication, local
PDS	Pressure difference switch
PDT	Pressure difference transmitter
PI	Pressure indication, local
PS	Pressure switch
PT	Pressure transmitter
ST	Speed transmitter
TC	Thermo couple (NiCr-Ni)
TE	Temperature element (Pt 100)
TI	Temperature indication, local
TS	Temperature switch
TT	Temperature transmitter
VS	Viscosity switch
VT	Viscosity transmitter
WI	Vibration indication, local
WS	Vibration switch
WT	Vibration transmitter
XC	Unclassified control
XS	Unclassified switch
XT	Unclassified transmitter
ZS	Position switch (limit switch)
ZT	Position transmitter (proximity sensor)

2025-03-28 - en

ZV	Position valve (solenoid valve)

Location of measuring point

Ident. number; first two digits indicate the measurement point and xx the serial number:

11xx	Manoeuvring system
12xx	Hydraulic power supply system (HPS)
13xx	Hydraulic control oil system, separate oil to HPS
14xx	Combustion pressure supervision
15xx	Top bracing pressure, stand alone type
16xx	Exhaust Gas Recirculation (EGR)
20xx	ECS to/from safety system
21xx	ECS to/from remote control system
22xx	ECS to/from alarm system
24xx	ME ECS outputs
29xx	Power supply units to alarm system
30xx	ECS miscellaneous input/output
40xx	Tacho/crankshaft position system
41xx	Engine cylinder components
50xx	VOC, supply system
51xx	VOC, sealing oil system
52xx	VOC, control oil system
53xx	VOC, other related systems
54xx	VOC, engine related components
60xx	GI-ECS to Fuel Gas Supply System (FGSS)
61xx	GI-ECS to Sealing Oil System
62xx	GI-ECS to Control Air System
63xx	GI-ECS to other GI related systems
64xx	GI engine related components
66xx	Selective Catalytic Reduction (SCR) related component. Stand alone
80xx	Fuel oil system
81xx	Lubricating oil system
82xx	Cylinder lubricating oil system
83xx	Stuffing box drain system
84xx	Cooling water systems, e.g. central, sea and jacket cooling water
85xx	Compressed air supply systems, e.g. control and starting air
86xx	Scavenge air system

2025-03-28 - en

87xx	Exhaust gas system
88xx	Miscellaneous functions, e.g. axial vibration
90xx	Project specific functions
A0xx	Temporary sensors for projects
xxxx-A	Alternative redundant sensors
xxxx-1	Cylinder/turbocharger numbers
	ECS: Engine Control System
	GI: Gas Injection engine
	VOC: Volatile Organic Compound

Table 18.07.01a: Identification of instruments

Functions

Secondary letters:

A	Alarm
C	Control
H	High
I	Indication, remote
L	Low
R	Recording
S	Switching
X	Unclassified function
Y	Slow down
Z	Shut down

Repeated signals

Signals which are repeated, for example measurements for each cylinder or turbocharger, are provided with a suffix number indicating the location, ‘1’ for cylinder 1, etc.

If redundant sensors are applied for the same measuring point, the suffix is a letter: A, B, C, etc.

Examples

TI 8005 indicates a local temperature indication (thermometer) in the fuel oil system.

ZS 1112-A C and ZS 1112-B C indicate two redundant position switches in the manoeuvring system, A and B, for control of the main starting air valve position.

PT 8501 I AL Y indicates a pressure transmitter located in the control air supply for remote indication, alarm for low pressure and slow down for low pressure.

2025-03-28 - en

078 89 33-9.6.0

Table 18.07.01b: Identification of instruments

2025-03-28 - en

01 Engine Design
02 Engine Layout and Load Diagrams, SFOC, dot 5
03 Turbocharger Selection & Exhaust Gas Bypass
04 Electricity Production
05 Installation Aspects
06 List of Capacities: Pumps, Coolers & Exhaust Gas
07 Fuel
08 Lubricating Oil
09 Cylinder Lubrication
10 Piston Rod Stuffing Box Drain Oil
11 Low-temperature Cooling Water
12 High-temperature Cooling Water
13 Starting and Control Air
14 Scavenge Air
15 Exhaust Gas
16 Engine Control System
17 Vibration Aspects
18 Monitoring Systems and Instrumentation
19 Dispatch Pattern, Testing, Spares and Tools
20 Project Support and Documentation
21 Appendix

This page is intentionally left blank

Dispatch pattern, testing, spares and tools

Painting of main engine

The painting specification, Section 19.02, indicates the minimum requirements regarding the quality and the dry film thickness of the coats of, as well as the standard colours applied on Everllence B&W engines built in accordance with the 'Copenhagen' standard.

Paints according to builder's standard may be used provided they at least fulfil the requirements stated.

Dispatch pattern

The dispatch patterns are divided into two classes, see Section 19.03:

A: Short distance transportation and short term storage
B: Overseas or long distance transportation or long term storage.

Short distance transportation *(A)* is limited by a duration of a few days from delivery ex works until installation, or a distance of approximately 1,000 km and short term storage.

The duration from engine delivery until installation must not exceed 8 weeks.

Dismantling of the engine is limited as much as possible.

Overseas or long distance transportation or long term storage require a class B dispatch pattern.

The duration from engine delivery until installation is assumed to be between 8 weeks and maximum 6 months.

Dismantling is effected to a certain degree with the aim of reducing the transportation volume of the individual units to a suitable extent.

Note: Long term preservation and seaworthy packing are always to be used for class B.

Furthermore, the dispatch patterns are divided into several degrees of dismantling in which '1' comprises the complete or almost complete engine. Other degrees of dismantling can be agreed upon in each case.

When determining the degree of dismantling, consideration should be given to the lifting capacities and number of crane hooks available at the engine maker and, in particular, at the yard (purchaser).

The approximate masses of the sections appear in Section 19.04. The masses can vary up to 10% depending on the design and options chosen.

Lifting tools and lifting instructions are required for all levels of dispatch pattern. The lifting tools, are to be specified when ordering and it should be agreed whether the tools are to be returned to the engine maker.

Everllence' recommendations for preservation of disassembled / assembled engines are available on request.

Furthermore, it must be considered whether a drying machine, is to be installed during the transportation and/or storage period.

2025-06-18 - en

Shop trials/delivery test

Before leaving the engine maker's works, the engine is to be carefully tested on diesel oil in the presence of representatives of the yard, the shipowner and the classification society.

The shop trial test is to be carried out in accordance with the requirements of the relevant classification society, however a minimum as stated in Section 19.05.

Everllence's recommendations for shop trial, quay trial and sea trial are available on request.

In connection with the shop trial test, it is required to perform a precertification survey on engine plants with FPP or CPP, engine test cycle E3 or engine test cycle E2 respectively.

Spare parts

List of spare parts, unrestricted service

The tendency today is for the classification societies to change their rules such that required spare parts are changed into recommended spare parts.

Everllence, however, has decided to keep a set of spare parts included in the basic extent of delivery, covering the requirements and recommendations of the major classification societies, see Section 19.06.

This amount is to be considered as minimum safety stock for emergency situations.

Additional spare parts recommended by Everllence

The above mentioned set of spare parts can be extended with the 'Additional spare parts recommended by Everllence, which facilitates maintenance because, in that case, all the components such as gaskets, sealings, etc. required for an overhaul will be readily available, see Section 19.07.

Wearing parts

The consumable spare parts for a certain period are not included in the above mentioned sets, but can be ordered for the first 1, 2, up to 10 years' service of a new engine.

The wearing parts that, based on our service experience, are estimated to be required, are listed with service hours in Tables 19.08.01 and 19.08.02.

Large spare parts, dimensions and masses

The approximate dimensions and masses of the larger spare parts are indicated in Section 19.09. A complete list will be delivered by the engine maker.

2025-06-18 - en

Tools

List of standard tools

The engine is delivered with the necessary special tools for overhauling purposes. The extent, dimen sions and masses of the main tools is stated in Section 19.10. A complete list will be delivered by the engine maker.

Tool panels

Most of the tools are arranged on steel plate panels, see Section 19.11 'Tool panels'.

It is recommended to place the panels close to the location where the overhaul is to be carried out.

2025-06-18 - en

This page is intentionally left blank

2025-06-18 - en

Specification for painting of main engine

Components to be painted before shipment from workshop	Type of paint	No. of coats Total nominal dry film thickness (NDFT) µm	Colour: RAL 840 HR, DIN 6164, MUNSELL
1. Components/surfaces, inside the engine, exposed to oil and air Unmachined surfaces all over. However, cast type crank throws, main bearing cap, crosshead bearing caps, crankpin bearing cap, pipes inside crankcase and chain wheel need not be painted, but the cast surface must be cleaned, so it is free from sand and scales, and kept free of rust.	In accordance with corrosivity categories C2 Medium ISO 12944-5		
	Engine alkyd primer, weather-resistant	1-2 layers Total NDFT: 80 µm	Free
	Oil- and acid-resistant alkyd paint, temperature resistant to min. 80°C	1 layer Total NDFT: 40 µm	**White:** RAL 9010 DIN N:0:0,5 MUNSELL N-9.5
		Total NDFT: 120 µm	
2. Components, outside the engine Engine body, pipes, gallery brackets, etc. Delivery standard is in a primed and finally painted condition, unless otherwise stated in the contract. See also Everllence EN-690D for colour marking of piping systems.	In accordance with corrosivity categories C2 Medium ISO 12944-5		
	Engine alkyd primer, weather-resistant	1-2 layers Total NDFT: 80 µm	Free
	Final alkyd paint, resistant to seawater and oil	1 layer Total NDFT: 40 µm	**Light green:** RAL 6019 DIN 23:2:2 MUNSELL 10GY 8/4
		Total NDFT: 120 µm	
3. Low-flashpoint fuels See also Everllence EN-690D for colour marking of piping systems. Chain pipe, supply pipe. Spool piece.	In accordance with corrosivity categories C2 Medium ISO 12944-5		
	Engine alkyd primer, weather resistant	1-2 layers Total NDFT: 80 µm	Free
	Final alkyd paint, resistant to seawater and oil	1 layer Total NDFT: 40 µm	**Yellow:** RAL 1021 MUNSELL 2.5Y 8/14
		Total NDFT: 120 µm	

2025-06-18 - en

Components to be painted before shipment from workshop	Type of paint	No. of coats Total nominal dry film thickness (NDFT) µm	Colour: RAL 840 HR, DIN 6164, MUNSELL
4. Heat-affected components Supports for exhaust receiver, air cooler housing, inside and outside. No surface may be left unpainted in the cooler housing. Exhaust valve housing (exhaust flange), non-water cooled only	In accordance with corrosivity categories C3 Medium ISO 12944-5		
	Ethyl silicate based zincrich paint, heat resistant to min. 300°C	1 layer Total NDFT: 80 µm	
5. Components affected by water, cleaning agents, and acid fluids below neutral pH Scavenge air cooler box, inside (reversing chamber). Preparation, actual number of coats, film thickness per coat, etc. has to be according to the paint manufacturer specifications. Air flow reversing-chamber, inside and outside. No surfaces may be left unpainted. Supervision from manufacturer is recommended during the introduction of the paint system.	In accordance with corrosivity categories C5-M High ISO 12944-5		Free
	Two-component epoxy phenolic	3 layers Total NDFT: 350 µm See specifications from product data sheet	
6. Gallery plates, topside	Engine alkyd primer, weather-resistant	C2 medium 1-2 layers Total NDFT: 80 µm	

2025-06-18 - en

Components to be painted before shipment from workshop	Type of paint	No. of coats Total nominal dry film thickness (NDFT) µm	Colour: RAL 840 HR, DIN 6164, MUNSELL
7. EGR-system - mixing chamber *) To be applied after the water mist catcher (WMC) and to the non-return valve at the scavenge air reciever. Optional: EGR paint can be applied from the air cooler outlet, (reversing chamber). *) Only for engines specified with EGR, or prepared for EGR installation	Vinyl ester/acrylic copolymer	Total NDFT: 500-1200 µm	Free
8. Purchased equipment and instruments painted in makers colour are acceptable, unless otherwise stated in the contract Tools are to be surface treated according to specifications stated on the drawings.	Electro(-) galvanised	See specifications from product data sheet	
Tool panels	Oil-resistant paint	1-2 layers Total NDFT: 80 µm	Pale grey: RAL 7038 DIN 24:1:2 MUNSELL N-7.5
9. Lifting points Pad eyes, wholes, clamps, threaded wholes, eye screws, eye nuts and other lifting points	Alkyd paint, resistant to water, lubricants, hydraulic oil and degreaser.	1 layer Total NDFT: 80 µm	Yellow: RAL 1021 MUNSELL 2.5y 8/14

All paints must be of good quality. Paints according to builder's standard may be used provided they fulfil at least the above requirements.
The data stated are only guidelines. Preparation, number of coats, film thickness per coat, etc., must be in accordance with the paint manufacturer's specifications.

074 33 57-9.21.0

Table 19.02.01: Painting of main engine

2025-06-18 - en

This page is intentionally left blank

2025-06-18 - en

Dispatch Pattern

The relevant engine supplier is responsible for the actual execution and delivery extent. As differences may appear in the individual suppliers' extent and dispatch variants.

Dispatch pattern A – short:

Short distance transportation limited by duration of transportation time within a few days or a distance of approximately 1,000 km and short term storage.

Duration from engine delivery to installation must not exceed eight weeks.

Dismantling must be limited.

Dispatch pattern B – long:

Overseas and other long distance transportation, as well as long-term storage.

Dismantling is effected to reduce the transport volume to a suitable extent.

Long-term preservation and seaworthy packing must always be used.

Note
The engine supplier is responsible for the necessary lifting tools and lifting instructions for transportation purposes to the yard.
The delivery extent of lifting tools, ownership and lend/lease conditions are to be stated in the contract.

Furthermore, it must be stated whether a drying machine is to be installed during the transportation and/or storage period.

2024-05-29 - en

Dispatch pattern variants

A1 + B1
Engine complete, i.e. not disassembled

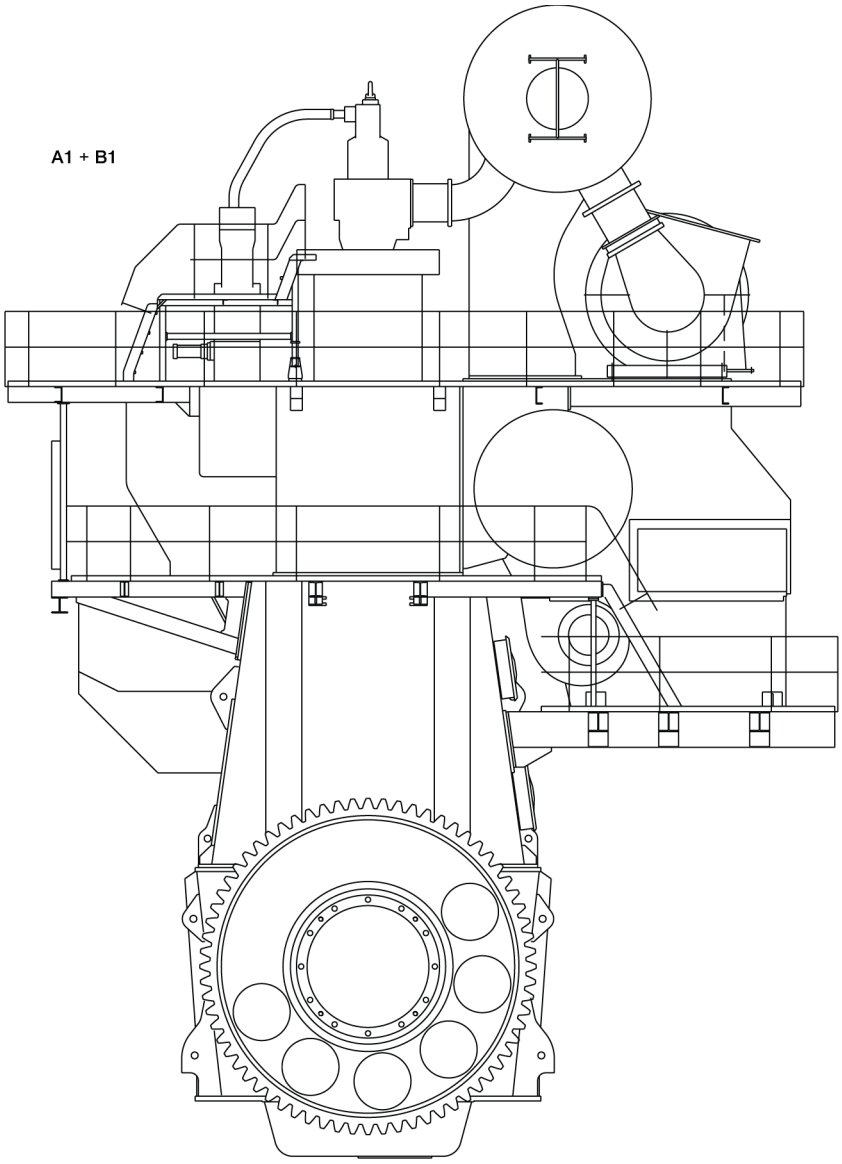

Engine complete

074 27 27-7.0.0a

Fig. 19.03.01: Dispatch pattern, engine with turbocharger on exhaust side

2024-05-29 - en

A2 + B2)

• Top section including cylinder frame complete, cylinder covers complete, scavenge air receiver including cooler box and cooler insert, turbocharger(s), piston complete and galleries with pipes, HCU units and oil filter

• Bottom section including bedplate complete, frame box complete, connecting rods, turning gear, crankshaft complete and galleries

• Remaining parts including stay bolts, chains, multi-way valves, etc.

A2 + B2

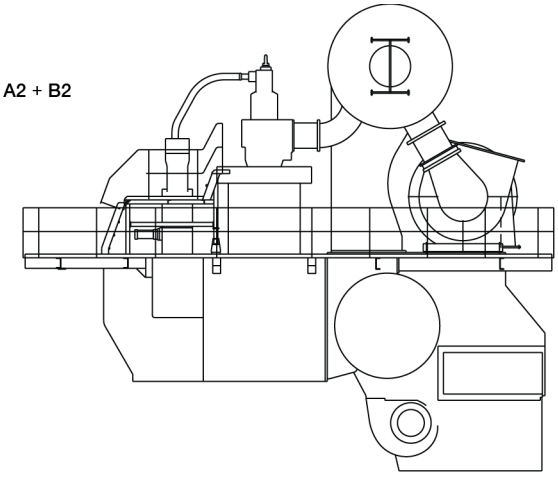

Top section

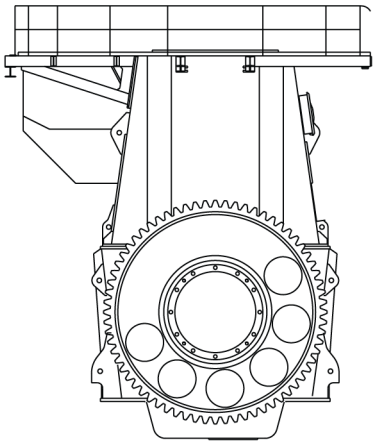

Bottom section

074 27 27-7.0.0b

Fig. 19.03.02: Dispatch pattern, engine with turbocharger on exhaust side

2024-05-29 - en

A3 + B3

• Top section including cylinder frame complete, cylinder covers complete, scavenge air receiver including cooler box and cooler insert, turbocharger(s), piston complete and galleries with pipes, HCU Units
• Frame box section including frame box complete, chain drive, connecting rods and galleries, gearbox for hydraulic power supply, hydraulic pump station and oil flter
• Bedplate/crankshaft section including bedplate complete, crankshaft complete with chainwheels and turning gear
• Remaining parts including stay bolts, chains, multi-way valves, etc.

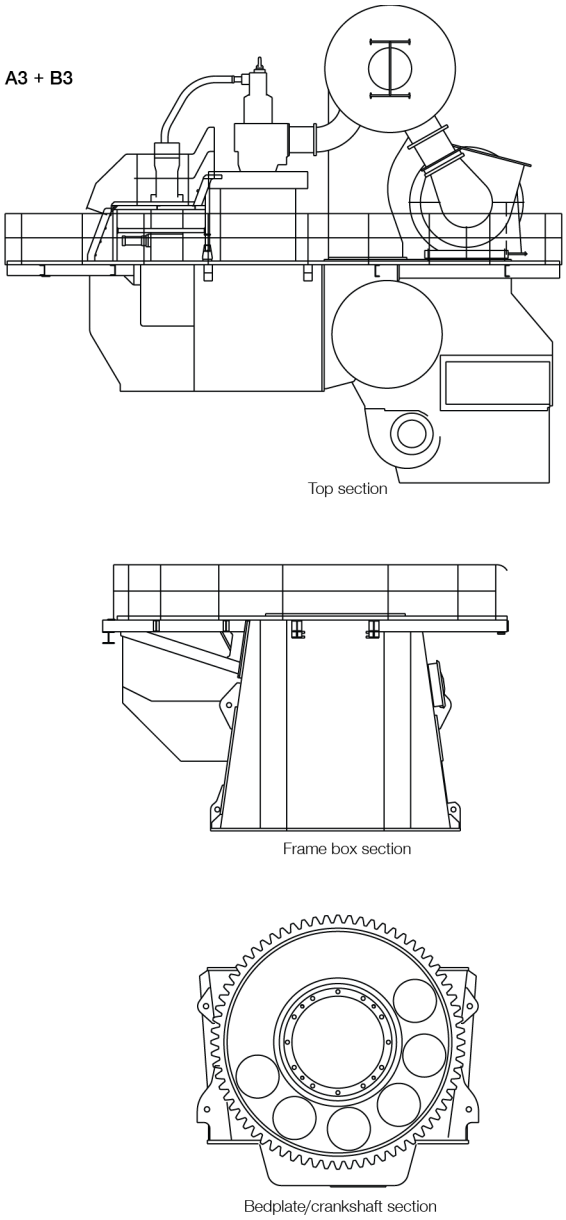

074 27 27-7.0.0c

Fig. 19.03.03: Dispatch pattern, engine with turbocharger on exhaust side

2024-05-29 - en

A4 + B4

• Top section including cylinder frame complete, cylinder covers complete, piston complete and galleries with pipes on manoeuvring side, HCU units
• Exhaust receiver with pipes
• Scavenge air receiver with galleries and pipes
• Turbocharger
• Air cooler box with cooler insert
• Frame box section including frame box complete, chain drive, connecting rods and galleries, gearbox for hydraulic power supply, hydraulic power station and oil flter
• Crankshaft with chain wheels
• Bedplate with pipes and turning gear
• Remaining parts including stay bolts, auxiliary blowers, chains, multi-way valves, etc.

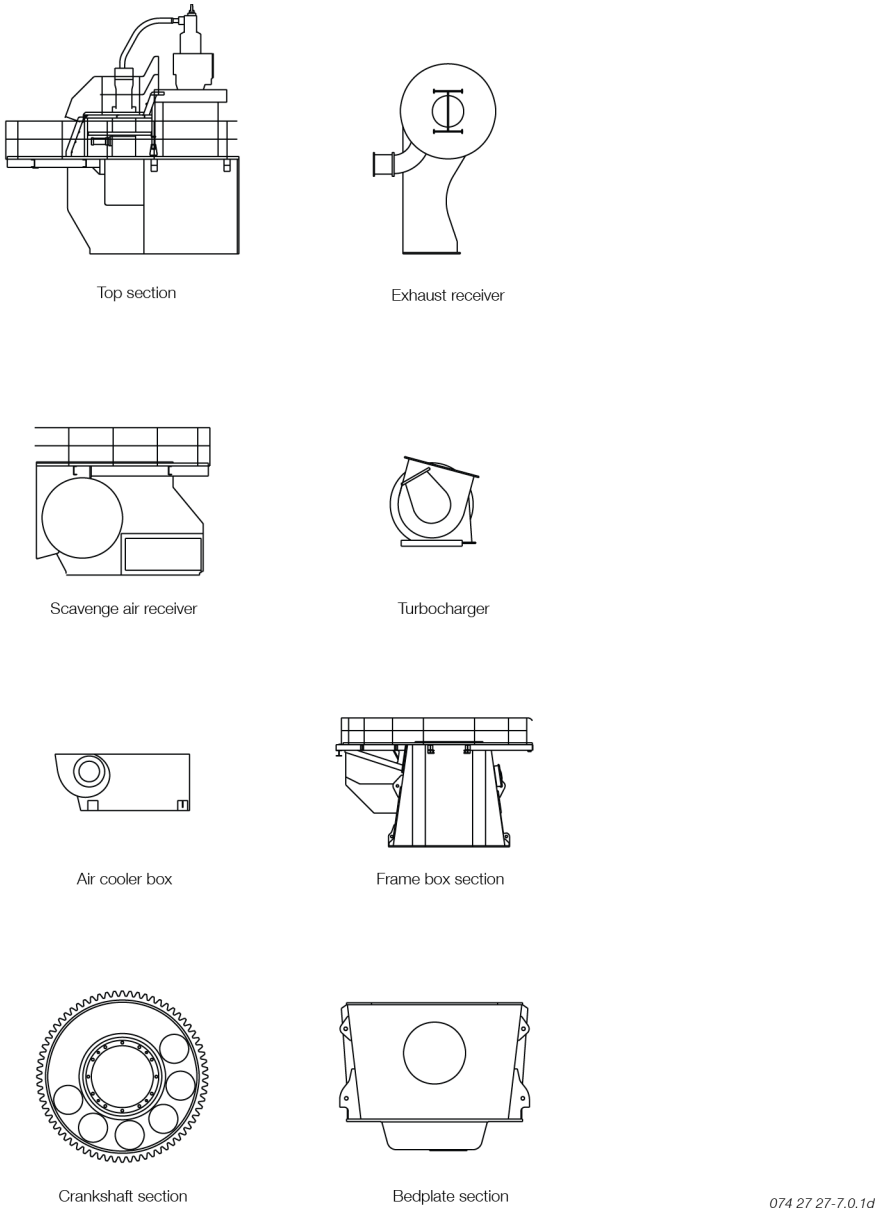

Fig. 19.03.03: Dispatch pattern, engine with turbocharger on exhaust side

2024-05-29 - en

This page is intentionally left blank

2024-05-29 - en

Dispatch pattern, list of masses and dimensions

This section is available on request

2025-03-28 - en

This page is intentionally left blank

Shop test

The minimum delivery test for Everllence B&W two-stroke engines involves:

- Starting
- Load test
- Engine to be started and run up to 50% of Specified MCR (M) in 1 hour.

and is followed by the below mentioned tests.

Load test at specific load points

The engine performance is recorded running at:

- 25% of specified MCR
- 50% of specified MCR
- 75% of specified MCR
- 90% of specified MCR or at NCR
- 100% of specified MCR *)
- 110% of specified MCR

Records are to be taken after 15 minutes or after steady conditions have been reached, whichever is shorter.

*) Two sets of recordings are to be taken at a minimum interval of 30 minutes.

Governor test and more:

- Integration test of ECS
- Governor test
- Minimum speed test
- Overspeed test
- Shut down test
- Starting and reversing test
- Turning gear blocking device test
- Start, stop and reversing from the Local Operating Panel (LOP).

Fuel oil test

Before leaving the factory, the engine is to be carefully tested on diesel oil in the presence of representatives of Yard, Shipowner, Classification Society, and Everllence

Fuel oil analysis is to be presented. All load point measurements are to be carried out on diesel or gas oil.

The shop tests are all carried out according to:

Factory Acceptance Test and Shipboard Trials of I.C. Engines, UR M51

by International Association of Classification Societies LTD. (IACS), www.iacs.org.uk

2025-06-18 - en

Vibration aspects

Torsional vibration

The installation aspects in a shop test and on a vessel are different. As a result, the torsional vibration characteristics are also different, and special countermeasures may apply during the shop test.

To reduce the stress amplitudes in the shafting system at the main critical resonance, a tuning wheel is commonly applied on 5-7 cylinder engines. In a shop test, the shaft between the engine and water brake is typically short and stiff compared to the shafting system connecting the propeller to the engine on a vessel. Due to the different installation aspects, a torsional vibration calculation of the shop test conditions is always made to ensure acceptable vibrations. It is common that the tuning wheel is omitted at the shop test to avoid excessive crankshaft stresses.

Regarding SFOC, the power absorbed in the tuning wheel and main bearing is very small. Based on elasto-hydrodynamic simulations of the foremost main bearing, the power loss with a large tuning wheel is 0.033% of engine power and 0.032% without a tuning wheel. Therefore, this power loss can be ignored in terms of the SFOC measurement conducted in a shop test.

In some cases, a torsional vibration damper has to be applied on the water brake side to achieve acceptable vibration conditions.

Structural vibration

In most cases, the vibration level and behaviour of the main engine is quite different when comparing test bed trials with sea trials. The main reason for this is the strong influence and dynamic interaction with the surroundings, the most important being:

1. The engine seating stiffness (foundation) is lower for the test bed compared to a vessel's double bottom. This will shift vibration resonances to lower engine speeds, which results in significantly different vibration levels and resonance speeds.
2. If top bracings are installed (vessel installation), this additional stiffness will not be present at the shop test (due to lack of stiffness/strength of the surrounding building). Some licensees may mount an electrically driven moment compensator (EMC) temporarily to reduce vibration levels during shop tests.

The global vibration behaviour of an engine erected on a test bed cannot, and should not, be compared to the vibration levels of a vessel-installed engine. Local vibrations of turbochargers and exhaust gas receivers are also strongly influenced by the dynamic interaction with the surroundings, be it a "soft test bed" or a "stiff ship hull".

2025-06-18 - en

EIAPP certificate

Most marine engines installed on ocean going vessels are required to have an 'Engine International Air Pollution Prevention' (EIAPP) Certificate, or similar. Therefore, a pre-certification survey is to be carried out for all engines according to the survey method described in the engine's NO_x Technical File, which is prepared by the engine manufacturer. For Everllence B&W engines, the Unified Technical File (UTF) format is recommended.

The EIAPP certificate documents that the specific engine meets the international NO_x emission limitations specified in Regulation 13 of MARPOL Annex VI. The basic engine 'Economy running mode', complies with these limitations.

The pre-certification survey for a 'Parent' or an 'Individual' engine includes NO_x measurements during the delivery test. For 'Member' engines, a survey according to the group definition for the engine group is needed. This survey should be based on the delivery test.

The applicable test cycles are:

- E3, marine engine, propeller law for FPP

  or
- E2, marine engine, constant speed for CPP

2025-06-18 - en

This page is intentionally left blank

2025-06-18 - en

List of spare parts, unrestricted service

Spare parts are **requested** by the following Classification Society only: NK, while just **recommended** by: ABS, DNV, CRS, KR, LR and RS, but neither requested nor recommended by: BV, CCS and RINA.

The final scope of spare parts is to be agreed between the owner and engine builder/yard.

Cylinder cover, plate 2272-0300 (901 and more)

1 Cylinder cover complete with fuel, exhaust and starting valves, indicator valve, cooling jacket and sealing rings (disassembled)
½ set Studs for 1 cylinder cover

Piston and piston rod, plates 2272-0400/0420/0500 (902)

1 Piston complete (with cooling pipe), piston rod, piston rings and stuffing box, studs and nuts
1 set Piston rings for 1 cylinder

Cylinder liner, plate 2272-0600 (903)

1 Cylinder liner complete, including cooling jacket, non-return valves, sealing rings and gaskets (assembled)

Cylinder lubricating oil system, plates 3072-0600,6670-0100 (903) 1)

1 Lubricator complete
1 set O-rings and seals
2 Lubricator backup cable

Connecting rod, and crosshead bearing, plates 1472-0300,2572-0300/0200 (904)

1 Telescopic pipe with bushing for 1 cylinder
1 Crankpin bearing shell (1 upper and 1 lower part) with studs and nuts
1 Crosshead bearing shell lower part with studs and nuts
2 Thrust piece

Thrust block, plate 2572-0600 (905)

1 set Thrust pads, complete FWD set for ‘Ahead’
1 set For KR and NK also 1 set ‘Astern’ if different from ‘Ahead’

HPS , Hydraulic power supply, plates 4572-1000/0750,4572-1100/1200/1250 (906) 1 and 2)

1 Proportional valve for hydraulic pumps
1 Leak indicator
1 Drive shaft for hydraulic pump, of each type (length)
1 Membrane plus seals for accumulator
1 set Minimess for accumulator

2026-04-15 - en

1 Compensator, fluid type
6 Chain links. Only for ABS, LR and NK
1 set Flexible hoses, one of each size and length
1 set High-pressure gasket kit
1 Coupling for start-up pump

ME filter, plate 4572-0800

1 set Filter elements for main filter, redundency, backwashing/sludge

Engine control system, plates 4772-1500/1550,7072-0800/1100/1250 [2])

1. Triton control system:

   set Controller spares:

   1 Base module
   1 CPU module
   1 Power supervision module
   1 Modbus module
   1 Digital I/O module (DI, DO, DRO)
   1 Analog I/O module
   1 Digital I/O module (DI, DO)
   1 Combi I/O module (AI/DO) Only GI
   1 ID-key for Triton

   1 Trigger sensor for tacho system. (if trigger ring and no angular encoder on fore end
   1 Encoder, steel compensator and bearing set (if angular encoder on fore end and no trigger ring)
   1 Marker sensor for tacho system
   1 Tacho signal amplifier (TCA)

Starting valve, plates 3472-0200/0250 (907)

1 Starting valve, complete [2])
(Included in the cylinder cover complete)
1 Solenoid valve [1])

Hydraulic cylinder unit, plates 4572-0500/0550/0100/0900,4272-0500 (906, 907) 1 and 2)

1 Fuel booster top cover, complete with plunger
1 ELFI + ELVA valves complete, or FIFA if applied.
1 Suction valve complete
1 20 %* Flexible high-pressure hoses, one of each size and length. *) Only for DNV
1 High-pressure pipe kit, one of each size and length
1 set Membrane plus seals for accumulator, 1 set for 1 HCU
1 Packing kit (O-rings, square seals and bonded seals)
1 Fuel booster position sensor
1 Exhaust actuator complete incl. non-return valve

2026-04-15 - en

Exhaust valve, plates 2272-0200/0210/0240 (908)

2 Exhaust valves complete
(The 2nd exhaust valve is included in the Cylinder cover complete)
Note: Not applicable for Class NK
1 High-pressure pipe from actuator to exhaust valve
1 Exhaust valve position sensor
1 Safety valve

Fuel valve, plates 4272-0200 (909)

1 set Fuel valves of each size and type fitted, complete with all fittings, for 1 engine

- engines with 1 or 2 fuel valves: 1 set of fuel valves for all cylinders on the engine
- engines with 3 and more fuel valves per cylinder: 2 fuel valves complete per cylinder, and a sufficient number of valve parts, excluding the body, to form, with those fitted in the complete valve, a full engine set

Fuel oil high-pressure pipes, plate 4272-0100 (909)

1 set High-pressure pipe, from fuel oil pressure booster to fuel valve

Turbocharger, plate 5472-0700 (910)

1 set Maker's standard spare parts
1 Spare rotor for 1 turbocharger, including compressor wheel, rotor shaft with turbine blades and partition wall, if any

Bedplate, plates 1072-0400, 2572-0400 (912)

1 Main bearing shell (1 upper and 1 lower part) of each size
1 set Studs and nuts for 1 main bearing

1) Everllence required spare parts.
2) All spare parts are requested by all Classes.

Note: Plate numbers refer to the Instruction Manual containing plates with spare parts (older three-digit numbers are included for reference)
Fig. 19.06.01b: List of spare parts, unrestricted service

2026-04-15 - en

This page is intentionally left blank

Additional spares

Beyond class requirements or recommendation, for easier maintenance and increased security in operation.

The final scope of spare parts is to be agreed between the owner and engine builder/yard.

Cylinder Cover, Plate 2272-0300 (901)

Exhaust valve studs for one unit
Exhaust valve nuts for one unit
½ eng O-rings for cooling jacket
½ eng Sealing between cylinder cover and liner
4 Spring housings for fuel valve.

Hydraulic Tool For Cylinder Cover, Plates 2270-0310/0315 (901)

1 set Hydraulic hoses with protection hose complete with couplings
8 pcs O-rings with backup rings, upper
8 pcs O-rings with backup rings, lower

Piston And Piston Rod, Plates 2272-0400/0420 (902)

1 box Locking wire, L=63 m
Piston ring pack for two units
2 D-rings for piston skirt
2 D-rings for piston rod

Piston Rod Stuffing Box, Plate 2272-0500 (902)

Stuffing box overhauling kit for two units

Cylinder Frame, Plate 1072-0710 (903)

½ set Studs for cylinder cover for 1 cylinder

Cylinder liner and Cooling Jacket, Plate 2272-0600/0660/0665 (903)

Non-return valves for two units
O-rings for one cylinder liner
½ eng Gaskets for cooling water connection
½ eng O-rings for cooling water pipes
1 set Cooling water pipes with blocks between liner and cover for 1 cylinder (only for engines not prepared for LDCL)
1 *) Repair kit for LDCL circulation pump
1 *) Repair kit for LDCL three-way control valve *) if fitted

Cylinder lubricating Oil System, Plate 3072-0600(903

1 Level switch for lubricator

2025-06-18 - en

Hydaulic Power Supply, HPS, Plates 4572-1000/0750, 4572-1100/1200/1250 (906)

1 Electric motor for start-up pump
1 Pressure relief valve for start-up pump
2 Pressure reducer for pump inlet
25% Plug screws for hydraulic system (HPS & HCU)
1 Accumulator, complete
1 Proportional valve
1 Swashplate transducer
1 Rubber compensator for inlet

Hydraulic Cylinder Unit, HCU, Plate 4572-0500 (906)

1 set Packings for booster & actuator, complete set
1 ELFI + ELVA valves, or FIVA if applied
1 Ball valve, pos. 420
1 Ball valve DN10
1 set Accumulator complete
25% Plug screws, shared with HPS & accumulator block

Accumulator/safety Block, Plate 4572-0700 (906)

1 Pressure transducer, pos. 320
25% Plug screws, shared with HPS & HCU
1 Ball valve DN10
1 Solenoid valve for valve pos. 310 (shut down)

Alarm and Safety System, Plate 4772-

1 Pressure sensor for scavenge air receiver, PT 8601
1 Pressure switch for lubricating oil inlet, PS 8109
1 Thrust bearing temperature sensor, TS 8107 (sensor only)
1 Pressure switch for jacket cooling water inlet, PS 8402

Main Starting Valve, Plate 3472-0300 (907)

The below main starting valve parts are all to be in accordance with the supplier's recommendation:
1 Repair kit for main actuator
1 Repair kit for main ball valve
1 *) Repair kit for actuator, slow turning
1 *) Repair kit for ball valve, slow turning

*) if fitted

Starting Valve, Plate 3472-0200 (907)

2 Locking plates
2 Pistons
2 Springs
2 Bushing
1 set O-rings
1 Valve spindle

2025-06-18 - en

Exhaust Valve, Plates 2272-0200/0210 (908)

1 Exhaust valve spindle
1 Exhaust valve seat
½ eng Sealing rings between exhaust valve and cylinder cover
4 Piston rings
½ eng Guide rings for air piston
½ eng Sealing rings
½ eng Safety valves
1 eng Gaskets and O-rings for safety valve
1 Piston complete
1 Opening damper piston
1 eng O-rings and sealings between air piston and exhaust valve housing/ spindle
1 Spindle guide
1 eng Gaskets and O-rings for cooling water connection
1 Conical ring in 2/2. Only for low-force design
1 eng O-rings for spindle/air piston
1 eng Non-return valve
1 Sealing oil unit. Only for engines without lowforce design/COL
1 Inductive sensor for exhaust valve positioning

Exhaust Valve Pipe, Plate 2272-0240 (908)

1 High pressure pipe from actuator to exhaust valve

Cooling Water Outlet, Plate 5072-0100 (908)

2 Ball valve
1 Butterfly valve
1 Gaskets for butterfly valve
1 Siemens Sipart for LDCL (if LDCL is installed)

Fuel Injection System, Plate 4272-0500 (909)

1 Fuel oil pressure booster complete, for 1 cylinder

Fuel Valve, Plate 4272-0200 (909)

1 eng Spindle guides, complete with fuel nozzle
1 eng O-rings and guide rings for fuel valve
½ eng Springs
½ eng Discs, +30 bar
3 Thrust spindles
3 Non-return valve, if mounted

Fuel Oil high-pressure Pipes, Plate 4272-0100 (909)

1 set High-pressure pipe, from fuel oil pressure booster to fuel valve
1 set O-rings for high-pressure pipes

2025-06-18 - en

Fuel Oil Regulating Valve, Plate 4272-0030 (909)

1 Fuel oil regulating valve, complete
1 O-ring of each kind

Turbocharger, Plate 5472-0700 (910)

1 set Spare parts for 1 turbocharger in accordance with the supplier's recommendation

Scavenge Air Receiver, Plates 5472-0400/0630 (910)

1 set Non-return valves for turbocharger (valve-flap including mounting)
1 set Non-return valve for auxiliary blower (valve-flap inlcuding mounting)
1 Compensator between TC and air cooler

Exhaust Pipes and Receiver, Plates 5472-0750/0900(910)

1 Compensator between TC and receiver
2 Compensator between exhaust valve and receiver
1 set Gaskets for each compensator
1 Compensator between FWD and Aft part, if any

Air Cooler, Plate 5472-0100 (910)

1 set Anodes (Corrosion blocks - only relevant for seawater cooled scavwenge air cooler)
1 set Packings. (If WHR-element or two-stage scavenge air cooler is installed then 1 set of packing for each type of cooler)

Auxiliary Blower, Plate 5472-0500 (910)

1 set Bearings for electric motor
1 set Shaft sealings

Arrangement of Safety Cap, Plate 3472-0900 (911)

1 eng Bursting disc

ME Filter, Plate 4572-0800 (912)

1 set Filter cartridges for redundancy filter.
Cartridge filtration ability, minimum Beta6=16.
Only for filter make Boll & Kirch

Notes: In the pcs/set column, 'eng' means 'engine set', i.e. a set for one engine, whereas 'set' means a set for the specific component(s).

Section numbers refer to Instruction Book, Vol. III containing plates with spare parts

2025-06-18 - en

Wearing Parts

Everllence Service Letter SL2026-782 provides guiding overhaul intervals and expected service life for key engine components.

See the latest Service Letter on
https://www.everllence.com/docs/default-source/service-letters/sl2026-782.pdf

Everllence

Service Letter
SL2026-782/SRJ

Two-stroke Copenhagen, April 2026

Action code: WHEN CONVENIENT

Guiding overhaul intervals

Updated tables

Concerns
Owners and operators of Everllence electronically controlled and dual-fuel two-stroke, low-speed marine engines.

Summary
Guiding overhaul intervals and expected service life of components on two-stroke engines.

Contact details
Engine Support Department: EngineSupport@everllence.com, or
PrimeServ Service Department: primeserv-services-dk@everllence.com.

References
Replaces SL2023-744/SRJ

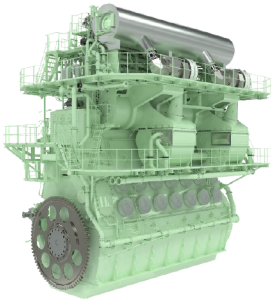

Everllence B&W 7G80ME-C10.5

Everllence
Teglholmsgade 41
2450 Copenhagen SV, Denmark
P +45 33 85 11 00
info-cph@everllence.com
www.everllence.com

Everllence PrimeServ
Teglholmsgade 41
2450 Copenhagen SV, Denmark
P +45 33 85 11 00
PrimeServ-cph@everllence.com

Production
Teglholmsgade 35, Denmark
P +45 33 85 11 00
manufacturing-dk@everllence.com

Forwarding & Receiving
Teglholmsgade 35, 2450 Copenhagen SV, Denmark
P +45 33 85 11 00
shipping-cph@everllence.com

Everllence
Filial af Everllence SE, Tyskland
CVR No.: 31611792

A Danish registered branch of Everllence SE
German Reg No.: HRB 22056
Amtsgericht Augsburg

Fig.19.08.01: Example from Service Letter

2026-05-11 - en

This page is intentionally left blank

2026-05-11 - en

Large spare parts, dimensions and masses

General

This section is available on request

This page is intentionally left blank

List of standard tools for maintenance

General

This section is available on request

2024-04-10 - en

This page is intentionally left blank

Tool panels

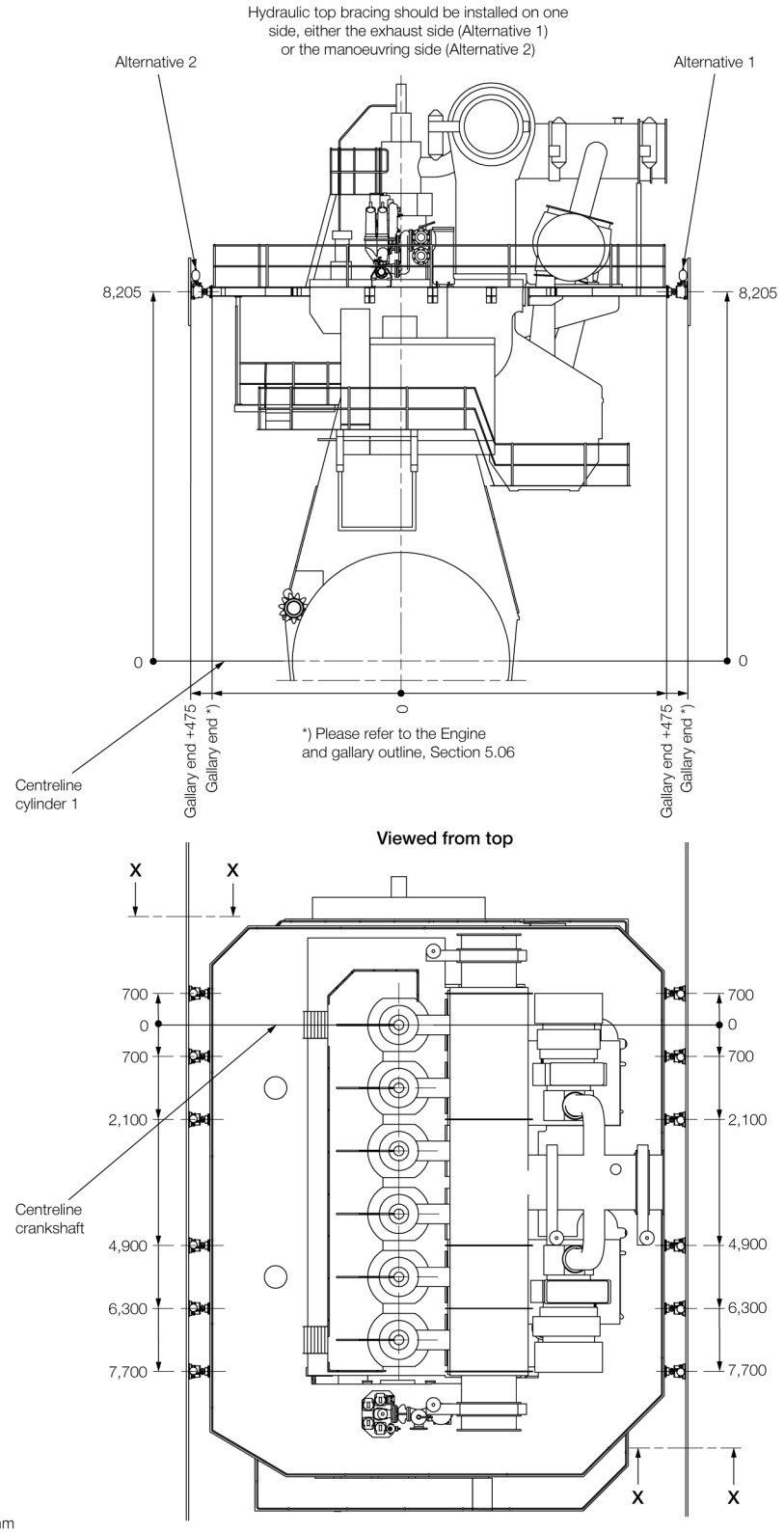

Note: All dimensions are in mm

602 99 54-8.5.0

Fig. 5.15.01: 6G80ME-C10.7/-GI-HPSCR, Example of Hydraulic top bracing arrangement, with two turbocharger(s) mounted on the exhaust side

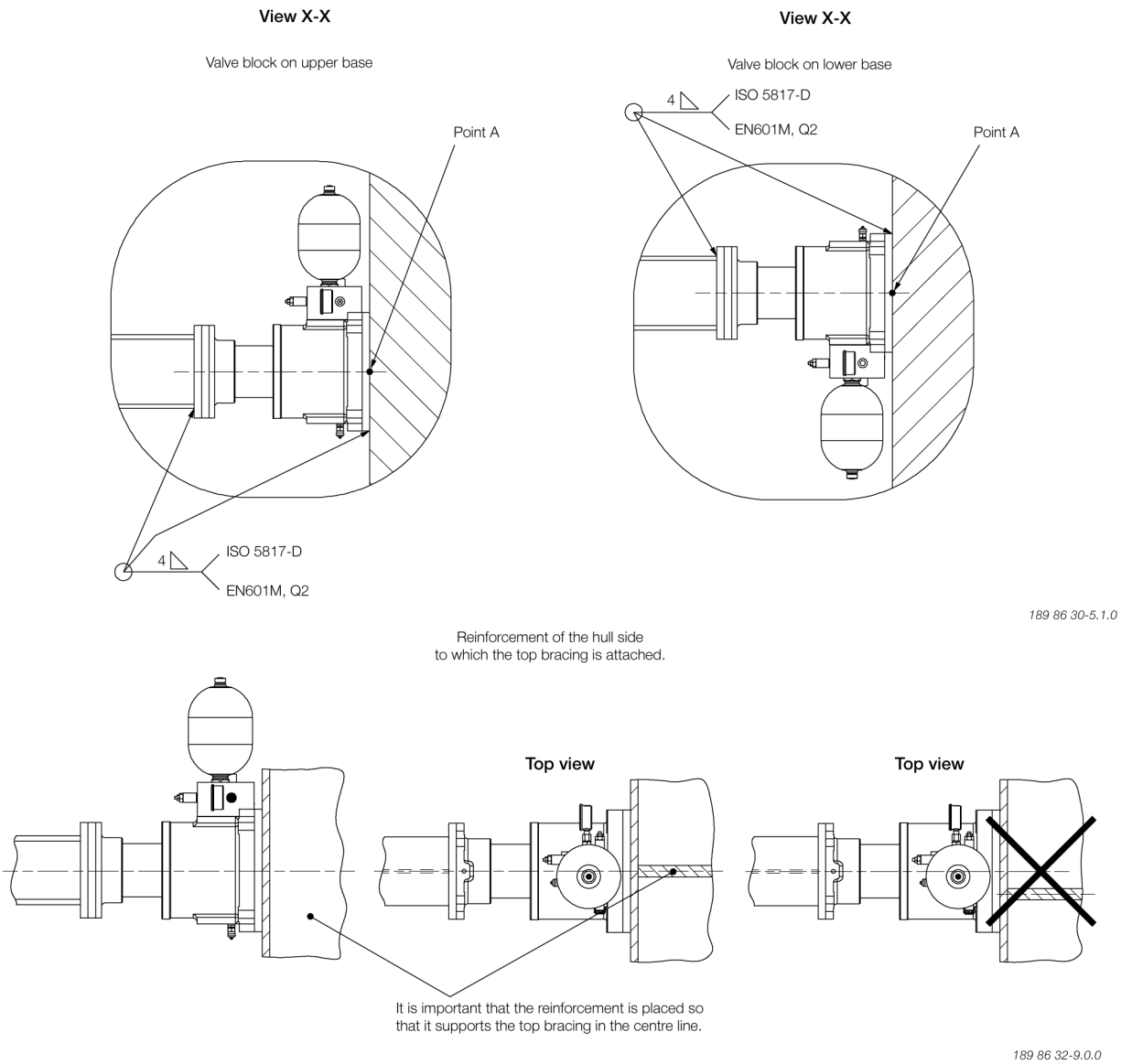

Fig. 5.15.02: Hydraulic top bracing data

As the rigidity of the casing structure to which the top bracing is attached is most important, it is recommended that the top bracing is attached directly into a deck.

Required rigidity of the casing side point A:

In the axial direction of the hydraulic top bracing: Force per bracing: 127 kN

Max. corresponding deflection of casing side: 0.51 mm

In the horizontal and vertical direction of the hydraulic top bracing: Force per bracing: 22 kN

Max. corresponding deflection of casing side : 2.00 mm

2026-06-25 - en

Optional tools

Fig. 19.12.01 shows the wide range of optional tools which can be requested for on-board maintenance. Optional tools are a supplement to the standard set of tools specified for each engine. Optional tools are available via Everllence, or directly via our co-operation agreement holders.

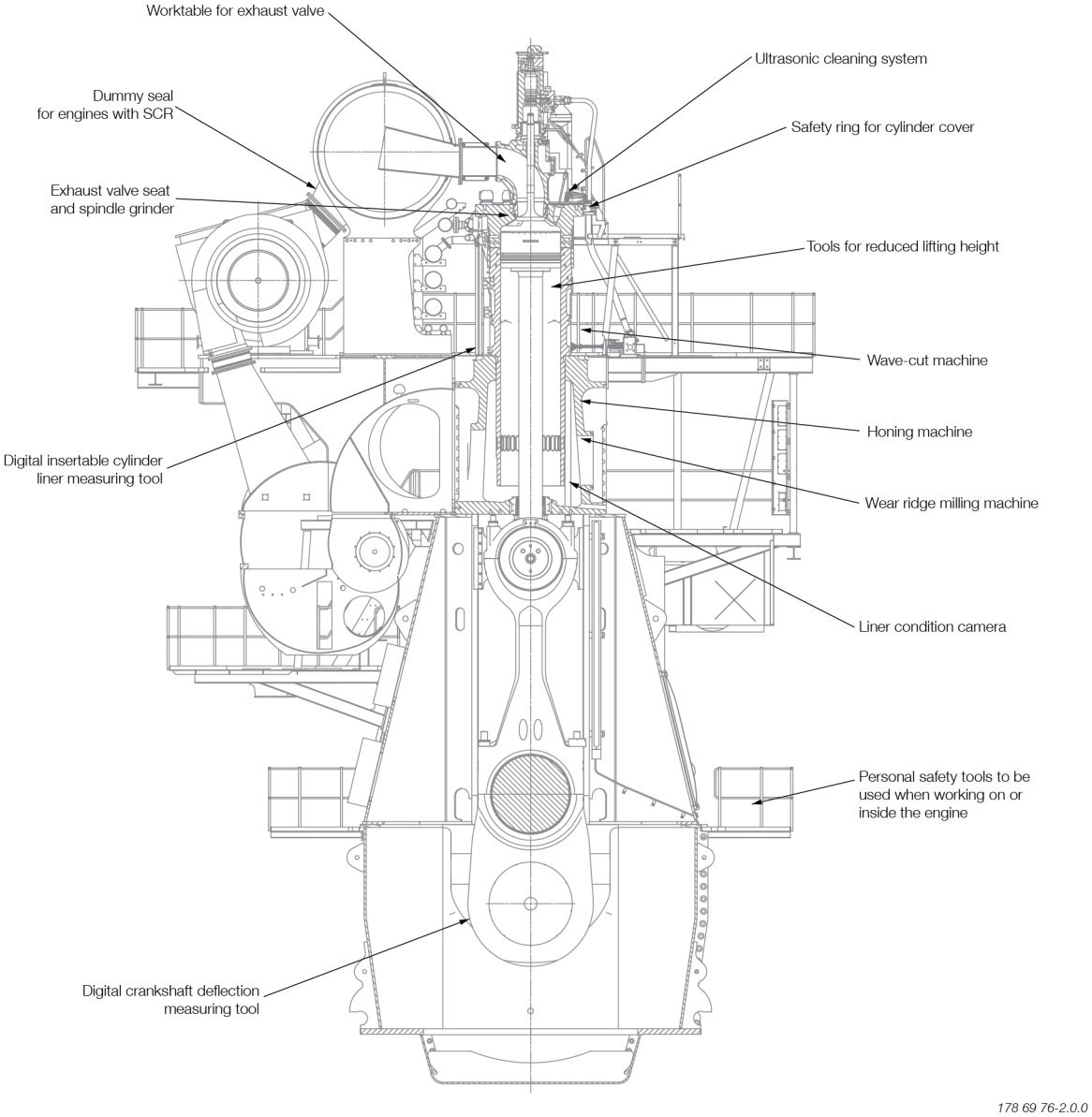

Fig. 19.12.01: Outline of optional tools

Inspection tools

The objective of a condition-based overhaul (CBO) strategy is to obtain the highest number possible of safe running hours. An overhaul should only be carried out when necessary, and the most important factor in a CBO strategy is the evaluation of the engine condition. This is done through regular scavenge port inspections and logging of wear and hot corrosion.

Everllence recommends to use the following optional measuring tools.

2026-06-08 - en

Digital cylinder liner measuring tool

The insertable digital cylinder liner measuring tool in Fig. 19.12.02 facilitates liner condition monitoring.

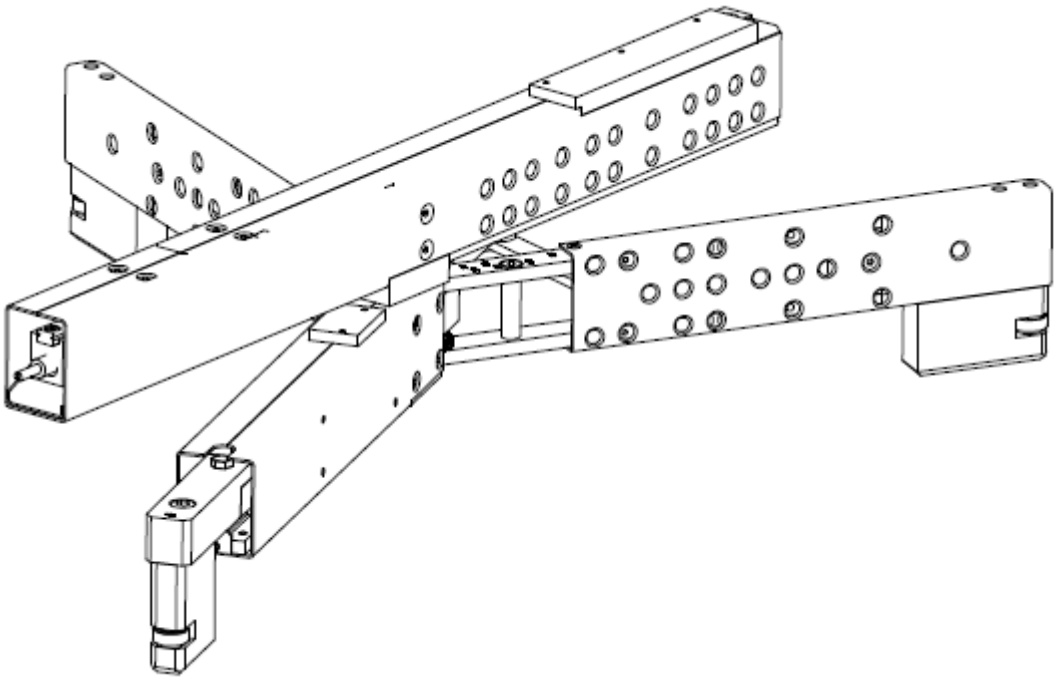

Fig. 19.12.02: The insertable cylinder liner measuring tool is available from different makers for engine bore size 40 and up

The cylinder liner wear profile can be predicted by regularly performing measurements during scavenge port inspections.

Measurements are done without removing the cylinder cover or exhaust valve housing, which saves time and enables more frequent measurements than when using the standard measuring tool.

2026-06-08 - en

Liner condition camera

The liner condition camera in Fig. 19.12.03 is used for in situ photography of the cylinder liner walls and piston rings in two-stroke engines.

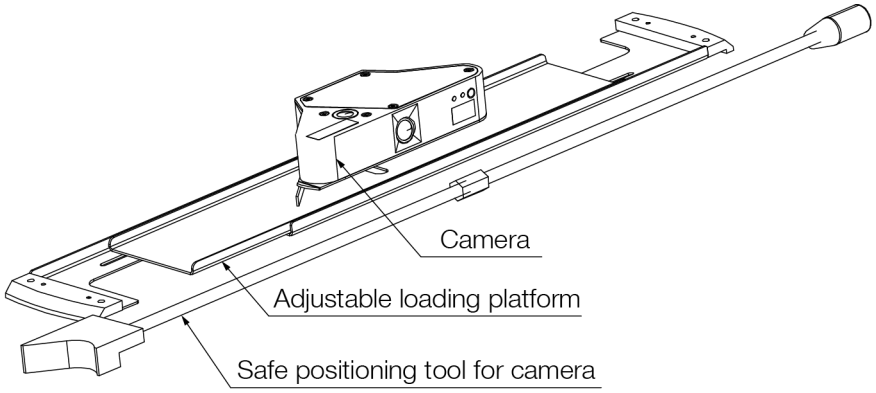

597 07 95-4.1.0

Fig. 19.12.03: Liner condition camera

The photos can be used for evaluating cylinder condition parameters such as cleanliness of ring land, size of cylinder wear edge, cylinder honing mark and wave-cut groove extension, as well as black lacquering from corrosive wear and bore polish.

2026-06-08 - en

Digital crankshaft deflection measuring tool

Crank web deflection measurements are used to assess the alignment of the crank throws and the main bearings. Compared to the standard tool with mechanical dial gauge, the digital crankshaft deflection tool has a higher accuracy, easier reading and is able to store data, see Fig. 19.12.04.

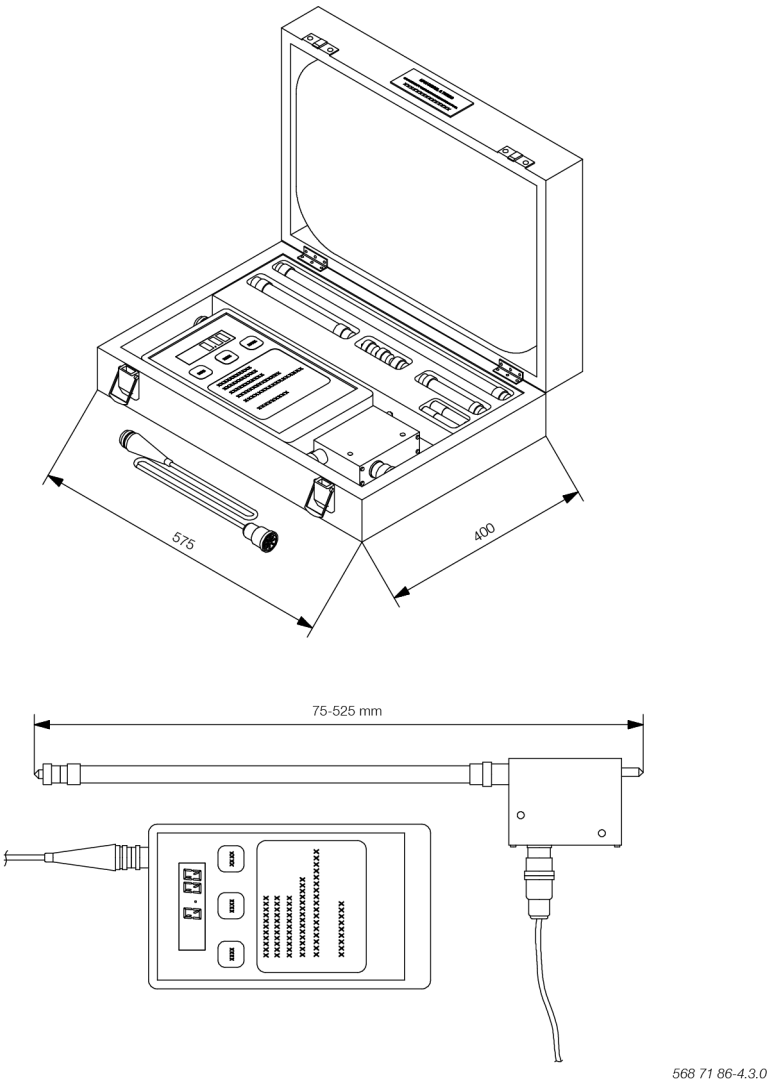

The digital measuring tool is available for all engine bore sizes.

Fig. 19.12.04: Digital crankshaft deflection measuring tool

Handling, grinding or refreshing tool

The following tools are recommended for best practice overhaul.

2026-06-08 - en

Wear ridge milling machine

The wear ridge milling machine in Fig. 19.12.05 removes the wear ridge created in the top of the cylinder liner.

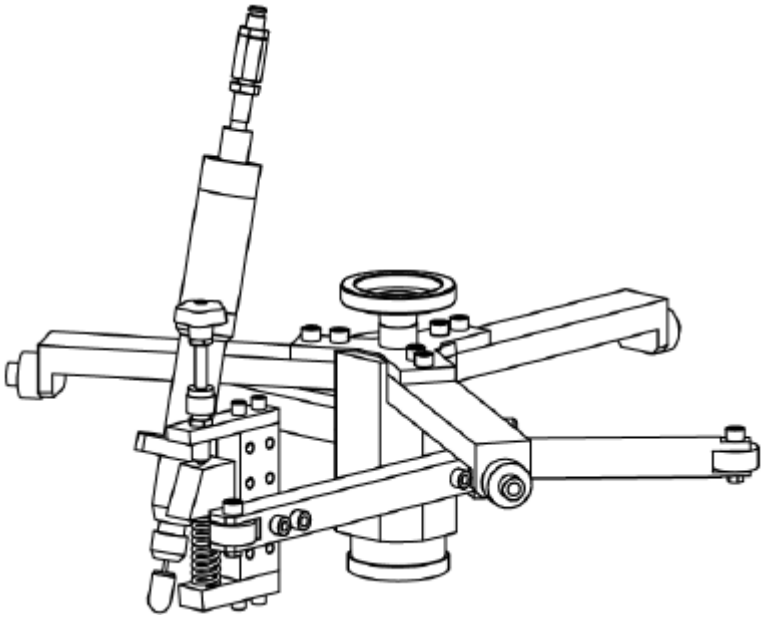

Fig. 19.12.05: Wear ridge milling machine

The ridge must be removed before pulling the piston, to prevent damage of the piston, and/or lifting of the cylinder liner.

The risk of damaging piston rings, when pulling a piston without removing the wear ridge, is especially high for CPR rings. The wear ridge milling machine minimises the risk of liner damage due to uncontrolled grinding. The wear ridge milling machine can also be used to create a groove in the top of the liner to prevent the build-up of a new wear ridge.

The wear ridge milling machine is available in two different versions: A standard milling machine, and a customised milling machine which does not require a hot works permit. The wear ridge milling machine is available for all engine bore sizes.

Honing machine

Honing is the best method for removing liner ovality, which causes premature ring breakage. Honing will also remove liner surface hardening and re-establish a normal wear rate of a hardened liner.

The honing machine can be used on its own, or combined with the wave-cut machine, see Fig. 19.12.06.

2026-06-08 - en

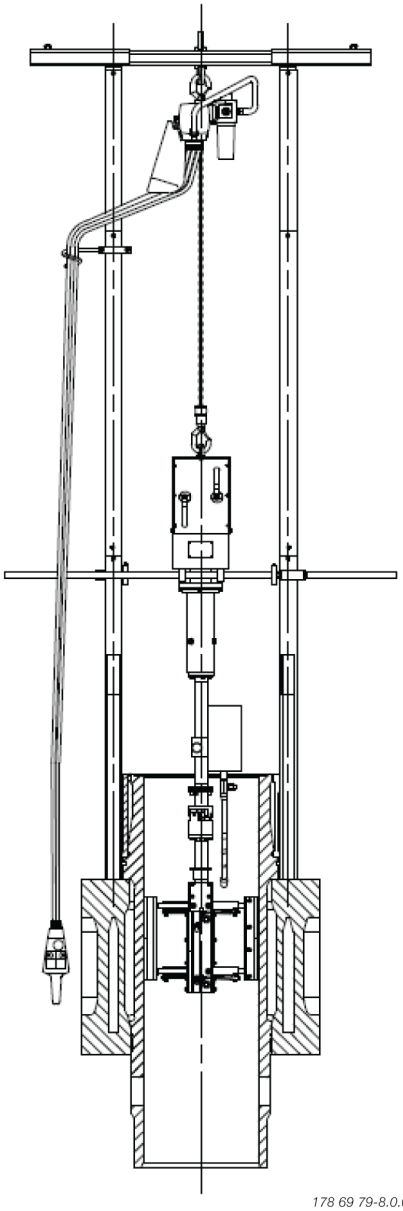

Fig. 19.12.06: Cylinder liner with honing machine

2026-06-08 - en

Wave-cut machine

The purpose of the wave-cut machine in Fig. 19.12.07 is to re-establish the wave-cut pattern of the cylinder liner wall, which retains oil and facilitates running-in of new piston rings.

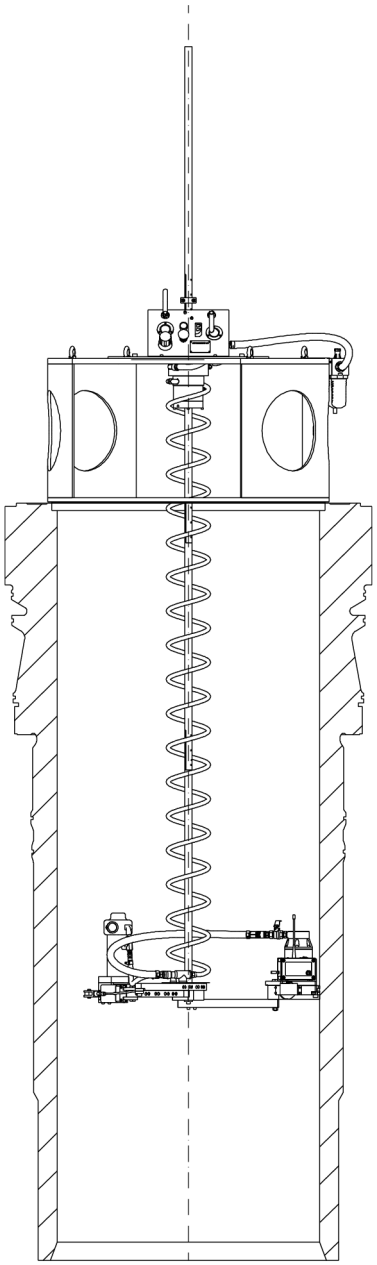

565 37 83-2.0.0

Fig. 19.12.07: Cylinder with wave-cut machine and wave-cut pattern

Wave-cutting does not compensate for liner ovality. The wave-cut machine can be used on its own, or combined with honing.

2026-06-08 - en

Worktable for exhaust valve

The exhaust valve worktable ensures that maintenance of the complete exhaust valve, or the exhaust valve housing can be carried out safely and easily, see Fig. 19.12.08. The worktable is available for all bore sizes.

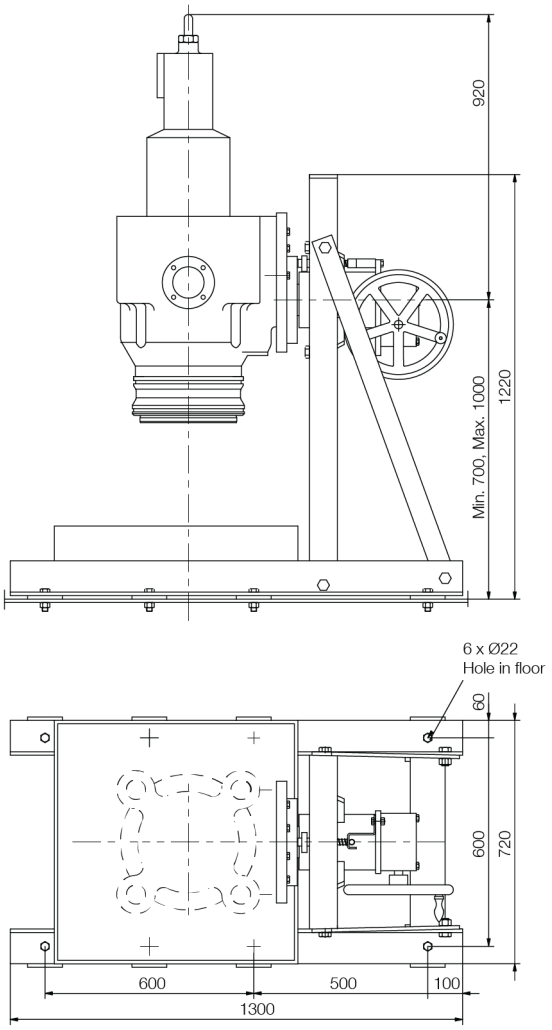

Fig. 19.12.08: Worktable for exhaust valve

2026-06-08 - en

Exhaust valve seat and spindle grinder

The exhaust valve seat and spindle grinder enables easy and accurate on-board grinding of the exhaust valve spindle and bottom piece sealing surfaces. See Fig. 19.12.09.

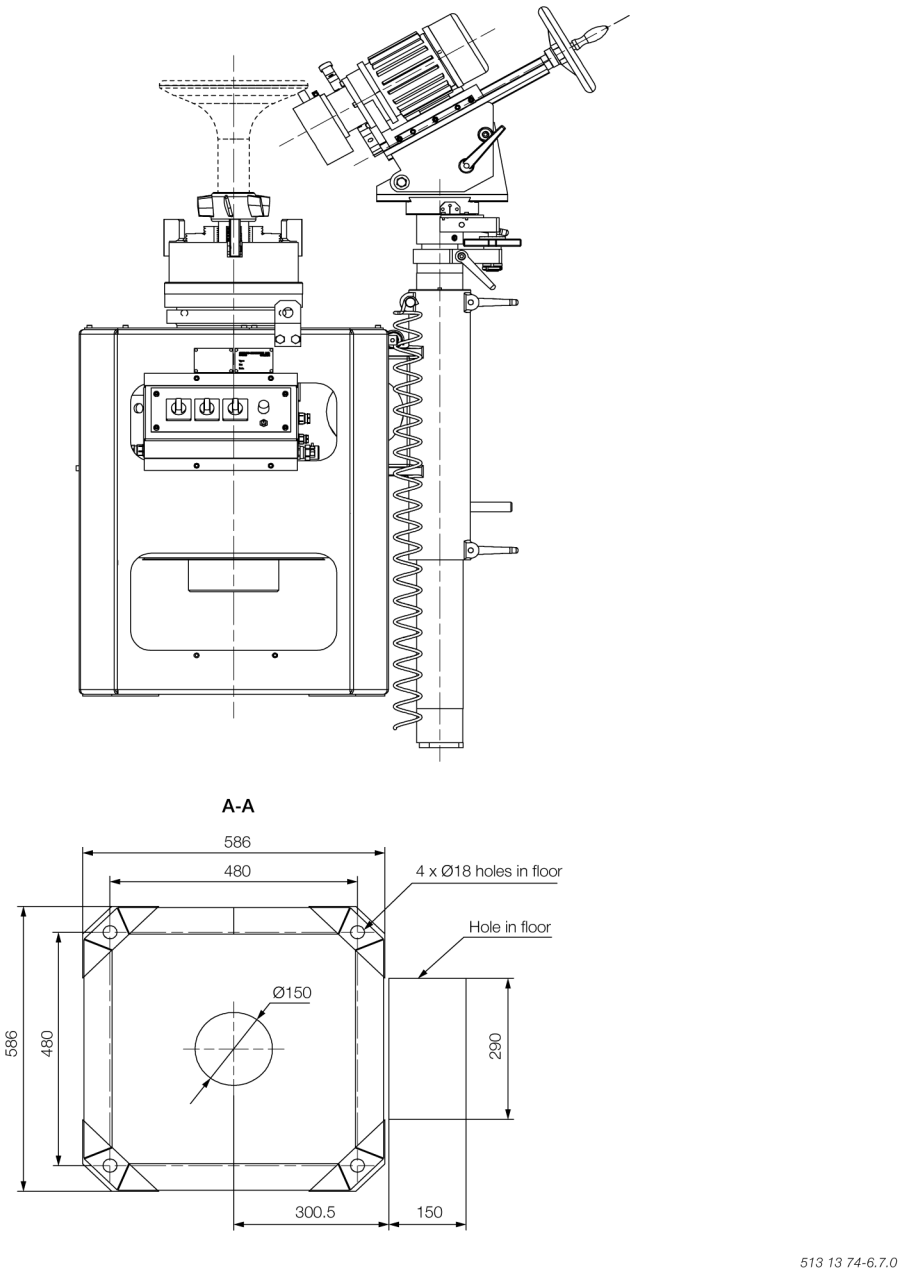

Fig. 19.12.09: Exhaust valve seat and spindle grinder

There are different versions of the grinder and it can be ordered for all engine bore sizes.

2026-06-08 - en

Dummy seal for SCR system

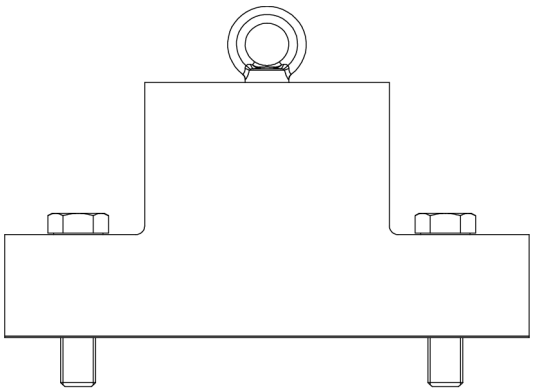

587 41 89-8.1.0

Fig. 19.12.10: Dummy seal for SCR system

Safety tools

Personal safety tools

Working on, or inside two-stroke engines are connected with the risk of falling down. The risk of falling down can be mitigated by using fall protection equipment, see Fig. 19.12.11.

The supplementary fall arrest safety equipment is CE or ANSI approved and includes a safety harness and lanyards.

178 69 80-8.0.0

a)

Lightweight full body harness (1,3 kg):

- Attach point on the backside
- Easy donning and adjustment
- Certified according to North American, European, and Russian standards
- Available in three sizes.

2026-06-08 - en

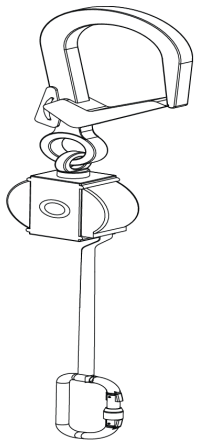

b)

Mini fall arrest block with steel hook:

- Extracts up to max. 2 m for flexibility
- Brake stops a free fall within a few centimeters
- Connects directly to the harness attach point at the hip, and hooks to a safe anchor point.

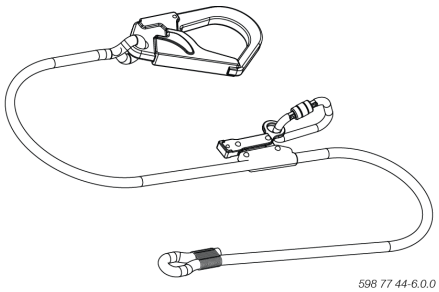

c)

Working positioning lanyard (2 m):

- Adjustable length and one-hand operated steel hook
- Connects directly to the harness attach point at the hip, and hooks to a safe anchor point.

Fig. 19.12.11: Full body harness (a), mini fall arrest block (b) and working positioning lanyard (c)

Safety ring for cylinder cover

The safety ring in Fig. 19.12.12 is used to provide access to the cylinder liner through the exhaust valve bore of the cylinder cover. This option is available for bore size 90 and above. For smaller bore sizes, the cylinder cover has to be dismantled.

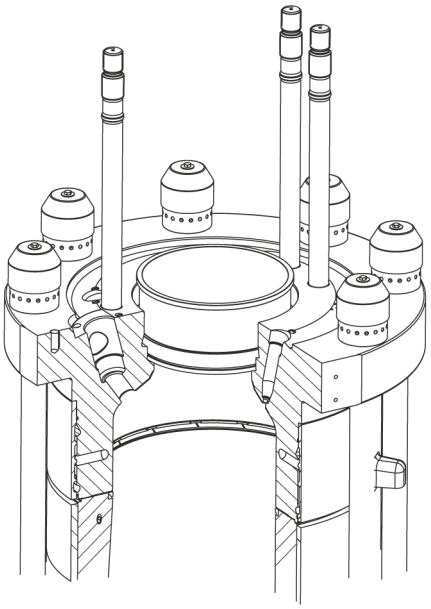

178 69 84-5.0.0

Fig. 19.12.12: Safety ring for cylinder cover

Tools for reduced lifting height

The optional tool package for engine rooms with reduced lifting height includes a collar ring which makes it possible to tilt the piston, thereby reducing the required lifting height.

It is possible to order engines with a bore-size smaller than 70 for engine rooms with a procedure for reduced lifting height. The tool package can be ordered for these engines upon request.

Tilted lift is not allowed for the cylinder liner, but the Everllence B&W double jib engine room crane reduces the necessary lifting height compared to the single crane standard solution. If possible, lifting screws for the double jib crane are included in the tool package for engine rooms with reduced lifting height, see Figs. 19.12.13 and 19.12.14.

2026-06-08 - en

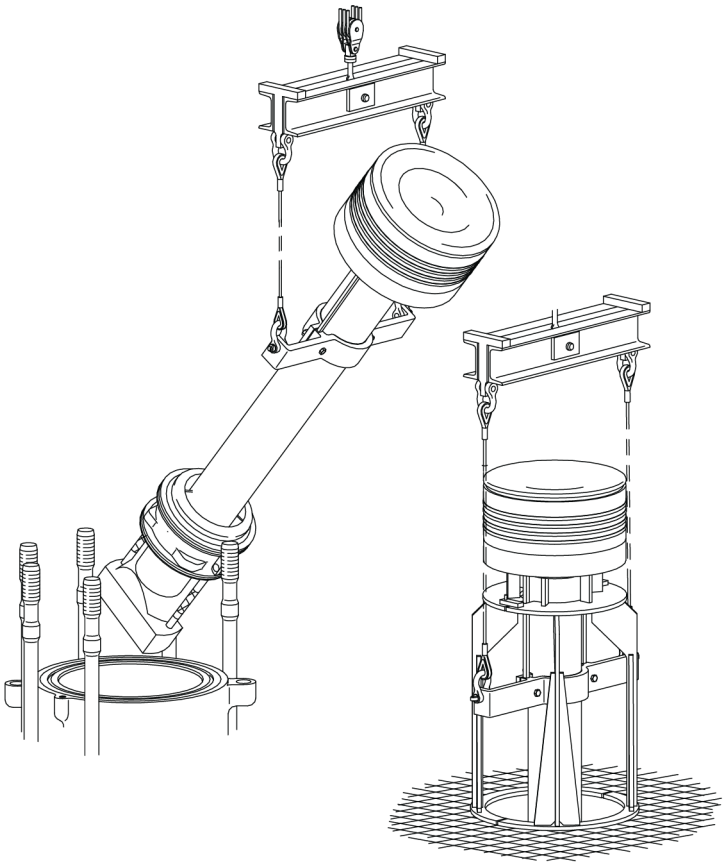

178 69 85-7.0.0

Fig. 19.12.13: Piston tool for reduced lifting height

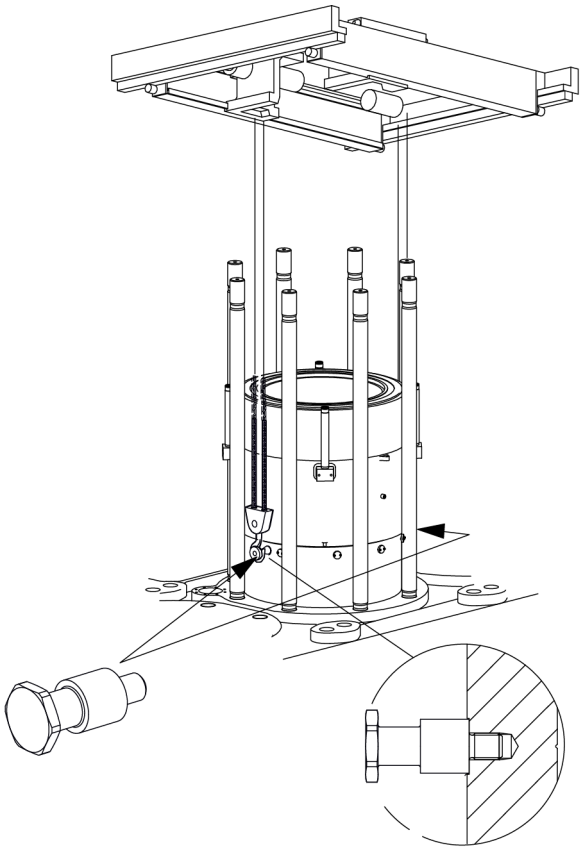

178 69 86-9.0.0

Fig. 19.12.14: Cylinder liner tool for engine rooms with reduced lifting heights

Ultrasonic cleaning system

An ultrasonic cleaning system can be installed onboard to enable cleaning of smaller engine parts such as fuel and spray nozzles, filters, etc. using ultra-sound waves in a specific chemical cleaning bath. The system is available in different sizes. See Fig. 19.12.15.

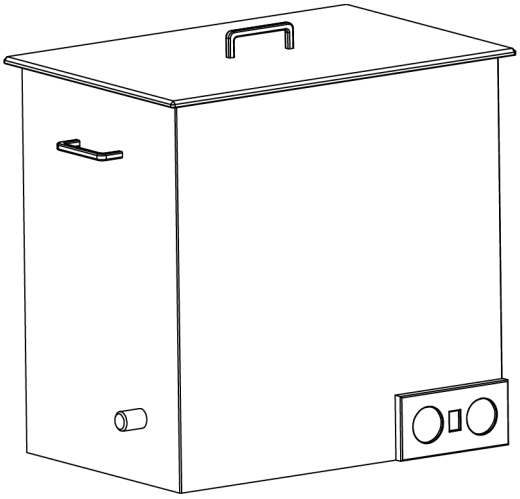

597 55 69-4.1.0

Fig. 19.12.15: Onboard ultrasonic cleaning system

2026-06-08 - en

Rig for large fuel valve

The rig in Fig. 19.12.16 facilitates overhaul work on large injection valves, e.g. dismantling and cleaning.

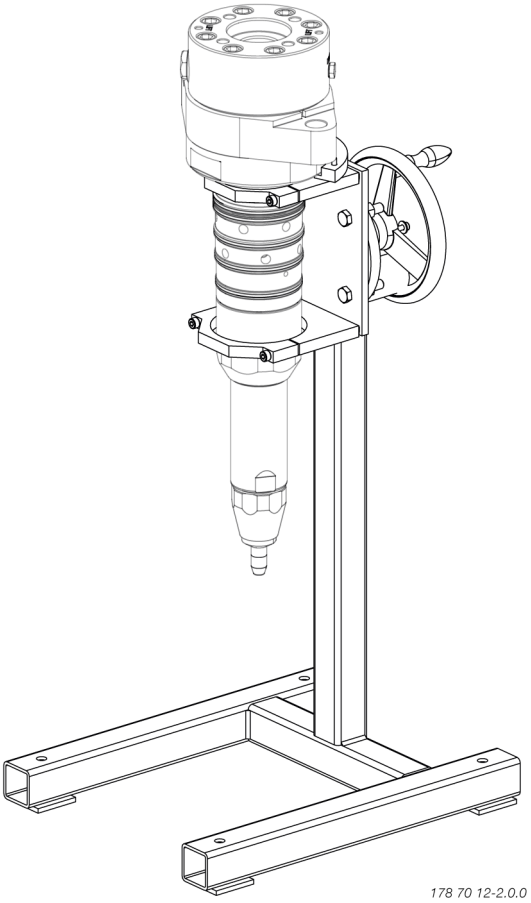

Fig. 19.12.16: Rig for large fuel valve

The depicted valve fixture bolted to the rig is a part of the standard maintenance tool package.

2026-06-08 - en

Tools for oil testing

Clean lubricating oil is fundamental for the operation of an Everllence B&W engine. Everllence recommends testing cylinder oil samples to detect metal particles and to determine the level of corrosive elements to avoid excessive cylinder liner wear.

Contaminants in the lubricating oil may damage hydraulic components. The following equipment is available for testing the lubricating oil:

- Ferrous wear test equipment (Fig. 19.12.17) for detecting metal particles in samples of cylinder lubricating oil
- Additional consumable pack for ferrous wear test equipment containing 500 test tubes and sampling pipettes.

178 70 58-9.0.0

Fig. 19.12.17: Ferrous wear test equipment for detecting metal particles in samples of cylinder lubricating oil

2026-06-08 - en

- Cold corrosion test equipment (Fig. 19.12.18) for obtaining the level of corrosive elements in the cylinder lubricating oil, including reagent pack for 100 tests
- Additional reagent pack for cold corrosion test kit containing reagents for 100 tests.

178 70 59-0.0.0

Fig. 19.12.18: Cold corrosion test equipment for obtaining the level of corrosive elements in the cylinder liner lubricating oil

2026-06-08 - en

- Total base number test kit (Fig. 19.12.19) for determining viscosity, total base number, total acid number, and a soot and water content in the oil
- Additional reagent pack for total base number test kit containing reagents for 50 tests.

178 70 60-0.0.0

Fig. 19.12.19: Total base number test kit for determining viscosity, total base number, total acid number, soot and water in oil

2026-06-08 - en

- Drip oil analyser (Fig. 19.12.20) for measuring the total iron content in the cylinder lubricating oil, which indicates corrosive and abrasive wear.

178 70 61-2.0.0

Fig. 19.12.20 Drip analyser for measuring the total iron content in the cylinder lubricating oil

- Rack, including 12 pcs. of iron testing units for the drip oil analyser

178 70 62-4.0.0

Fig. 19.12.21: Rack, including 12 pcs. of iron testing units for the drip oil analyser

- Pipette for drip oil analyser, Fig 19.12.22.

178 70 63-6.0.0

Fig. 19.12.22: Pipette for drip oil analyser

2026-06-08 - en

Appendix: Tool plates for optional tools

Table 19.12.01 shows tool plates with optional tools described in previous sections. For ordering, contact Everllence PrimeServ and state IMO no., engine type, plate no. and item no. of the tool in question.

Plate No.	Description
2270-0610	Digital insertable cylinder liner measuring tool
1070-1035	Digital crankshaft deflection measuring tool
2270-0620	Wear ridge milling machine
2270-0630	Honing machine
2270-0630	Wave-cut machine
2270-0220	Worktable for exhaust valve
2270-0210	Exhaust valve seat and spindle grinder
0570-0100	Personal safety package
2270-0335	Safety ring for cylinder liner
2270-0460	Tools for reduced lifting height, bore sizes smaller than 70
4270-0240	Rig for large fuel valve
3070-0600	Ferrous wear meter (FWM) test kit
3070-0600	Consumable pack for FWM
3070-0600	Cold corrosion test kit (CCTK)
3070-0600	Reagent pack for CCTK
3070-0600	Total base number (TBN) test kit
3070-0600	Reagent pack for TBN
3070-0600	DOT FAST drip oil analyser
3070-0600	DispoRack, including 12 pcs. of iron testing units
3070-0600	MicroMan pipette

Table 19.12.01: Tool plates for optional tools

2026-06-08 - en

This page is intentionally left blank

2026-06-08 - en

01 Engine Design
02 Engine Layout and Load Diagrams, SFOC, dot 5
03 Turbocharger Selection & Exhaust Gas Bypass
04 Electricity Production
05 Installation Aspects
06 List of Capacities: Pumps, Coolers & Exhaust Gas
07 Fuel
08 Lubricating Oil
09 Cylinder Lubrication
10 Piston Rod Stuffing Box Drain Oil
11 Low-temperature Cooling Water
12 High-temperature Cooling Water
13 Starting and Control Air
14 Scavenge Air
15 Exhaust Gas
16 Engine Control System
17 Vibration Aspects
18 Monitoring Systems and Instrumentation
19 Dispatch Pattern, Testing, Spares and Tools
20 Project Support and Documentation
21 Appendix

This page is intentionally left blank

Project support and documentation

The selection of the ideal propulsion plant for a specific newbuilding is a comprehensive task. However, as this selection is a key factor for the profitability of the ship, it is of the utmost importance for the end-user that the right choice is made.

Everllence is able to provide a wide variety of support for the shipping and shipbuilding industries all over the world.

The knowledge accumulated over many decades by Everllence covering such fields as the selection of the best propulsion machinery, optimization of the engine installation, choice and suitability of a power take off for a specific project, vibration aspects, environmental control etc., is available to shipowners, shipbuilders and ship designers alike.

Part of this information can be found in the following documentation:

- Marine engine programme
- Turbocharger selection
- Installation drawings
- CEAS - Engine room dimensioning
- Project guides
- Technical papers

The publications are available at:
www.everllence.com--> Marine --> Planning tools & download.

Project guides

For each engine type of MC, ME or ME-B design a 'Project Guide' has been prepared, describing the general technical features of that specific engine type, and also including some optional features and equipment.

The information is general, and some deviations may appear in a final engine documentation, depending on the content specified in the contract and on the individual licensee supplying the engine. The Project Guides comprise an extension of the general information in the Engine Selection Guide, as well as specific information on such subjects as:

- Engine design
- Engine layout and load diagrams, SFOC
- Turbocharger selection & exhaust gas by-pass
- Electricity production
- Installation aspects
- List of capacities: Pumps, coolers & exhaust gas
- Fuel oil
- Lubricating oil
- Cylinder lubrication
- Piston rod stuffing box drain oil
- Central cooling water system
- Seawater cooling
- Starting and control air
- Scavenge air
- Exhaust gas
- Engine control system
- Vibration aspects
- Monitoring systems and instrumentation

2025-06-19 - en

- Dispatch pattern, testing, spares and tools
- Project support and documentation
- Appendix

2025-06-19 - en

CEAS and Engine selection guide applications

CEAS application

Everllence offers further customised information as project support. For this purpose, we have developed the CEAS application for specific calculations during the project stage.

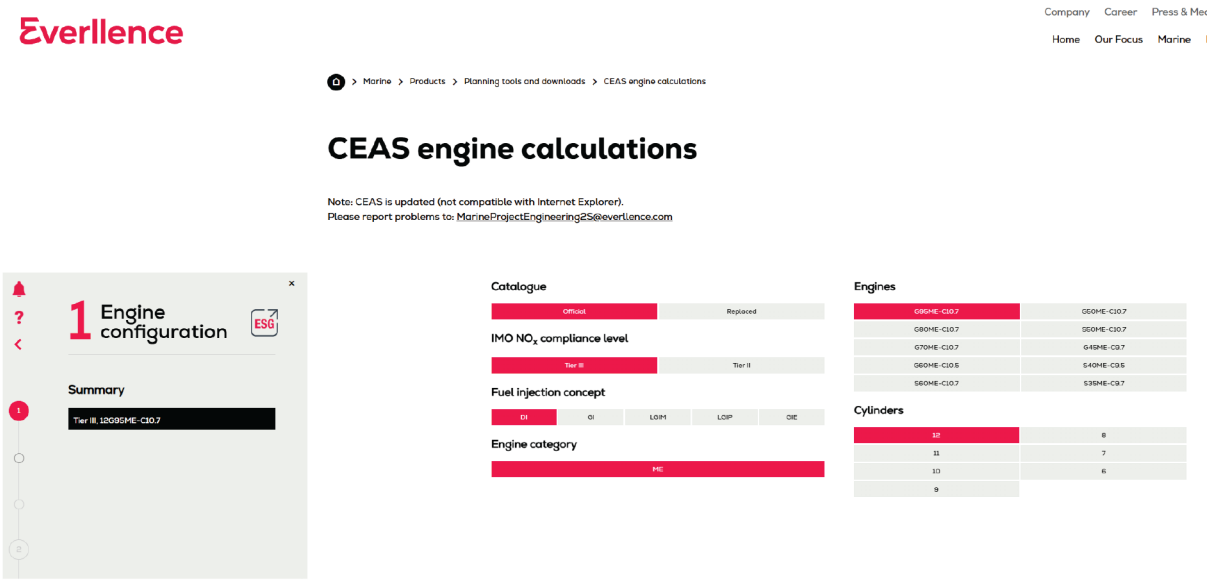

178 70 79-3.1.0

Fig. 20.02.01: CEAS application example

You can find the CEAS application at Everllence' web site:
CEAS application

On completion of the CEAS application, a report is generated covering the following:

- Main engine room data
- Specified main engine and ratings
- Ambient reference conditions
- Expected SFOC, lube oil consumption, air and exhaust gas data
- Necessary capacities of auxiliary machinery (SMCR)
- Starting air system, engine dimensions, tanks, etc.
- Tables of SFOC and exhaust gas data
- Heat dissipation of the engine
- Water condensation separation in air coolers
- Structure-borne noise in engine room and exhaust gas
- Preheating of diesel engine
- Alternative engines and turbochargers, further reading

The web site has links to related Everllence' publications and papers, too.

2025-06-19 - en

Supplementary project data on request

Further to the data generated by the CEAS application, the following data are available on request at the project stage:

- Estimation of ship's dimensions
- Propeller calculation and power prediction
- Selection of main engine
- Comparison of main engines
- Maintenance and spare parts costs of the engine
- Total economy – comparison of engine rooms
- Ship requirements to steam and electrical power
- Utilisation of exhaust gas heat
- Utilisation of jacket cooling water heat for freshwater production
- Exhaust gas back pressure
- Layout/load diagrams of the engine.

Contact Everllence Copenhagen to obtain data.

2025-06-19 - en

Engine selection guide

Based on few input options, the Engine selection guide lists and sorts applicable two-stroke Everllence B&W engines and variants.

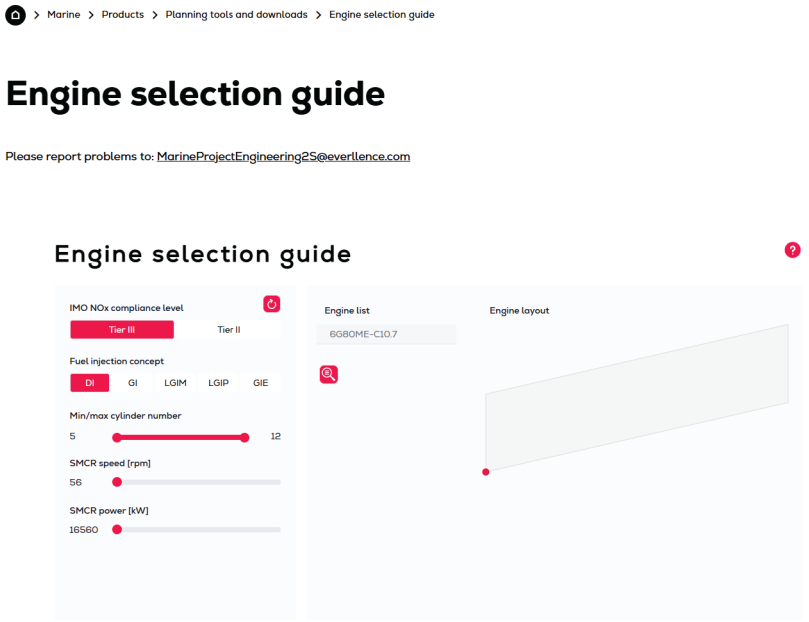

178 71 38-1.1.0

Fig. 20.02.02: Engine selection guide example

The application is available at Everllence' web site:

Engine selection guide

This page is intentionally left blank

2025-06-19 - en

Extent of delivery

The extent of delivery (EoD) has been phased out and will no longer be updated

178 71 30-7.0.0

2024-05-06 - en

This page is intentionally left blank

2024-05-06 - en

Installation documentation

When a final contract is signed, a complete set of documentation, in the following called 'Installation Documentation', will be supplied to the buyer by the engine maker.

The extent of Installation Documentation is decided by the engine maker and may vary from order to order.

As an example, for an engine delivered according to Everllence 'Copenhagen standard extent of delivery', the Installation Documentation is divided into the volumes 'A' and 'B':

- Volume 'A'
Mainly comprises general guiding system drawings for the engine room
- Volume 'B'
Mainly comprises specific drawings for the main engine itself.

Most of the documentation in volume 'A' are similar to those contained in the respective project guides, but the installation documentation will only cover the order-relevant designs.

The engine layout drawings in volume 'B' will, in each case, be customised according to the buyer's requirements and the engine maker's production facilities.

A typical extent of a set of volume 'A' and B' drawings is listed in the following.

For questions concerning the actual extent of Installation Documentation, please contact the engine maker.

Engine-relevant documentation

Engine data, on engine

External forces and moments
Guide force moments
Water and oil in engine
Centre of gravity
Basic symbols for piping
Instrument symbols for piping
Balancing

Engine connections

Engine outline
List of flanges/counterflanges
Engine pipe connections

Engine instrumentation

List of instruments
Connections for electric components
Guidance values automation, engine
Electrical wiring

2025-06-19 - en

Engine control system

Engine control system, description
Engine control system, diagrams
Pneumatic system
Speed correlation to telegraph
List of components
Sequence diagram

Control equipment for auxiliary blower

Electric wiring diagram
Auxiliary blower
Starter for electric motors

Shaft line, on engine

Crankshaft driving end
Fitted bolts

Turning gear

Turning gear arrangement
Turning gear, control system
Turning gear, with motor

Spare parts

List of spare parts

Engine paint

Specification of paint

Gaskets, sealings, O-rings

Instructions
Packings
Gaskets, sealings, O-rings

Engine pipe diagrams

Engine pipe diagrams
Bedplate drain pipes
Instrument symbols for piping
Basic symbols for piping
Lubricating oil, cooling oil and hydraulic oil piping
Cylinder lubricating oil pipes
Stuffing box drain pipes
Cooling water pipes, air cooler
Jacket water cooling pipes
Fuel oil drain pipes
Fuel oil pipes
Control air pipes

2025-06-19 - en

Starting air pipes
Turbocharger cleaning pipe
Scavenge air space, drain pipes
Scavenge air pipes
Air cooler cleaning pipes
Exhaust gas pipes
Steam extinguishing, in scavenge air box
Oil mist detector pipes, if applicable
Pressure gauge pipes

Engine room-relevant documentation

Engine data, in engine room

List of capacities
Basic symbols for piping
Instrument symbols for piping

Lubricating and cooling oil

Lubricating oil bottom tank
Lubricating oil filter
Crankcase venting
Lubricating and hydraulic oil system
Lubricating oil outlet

Cylinder lubrication

Cylinder lubricating oil system

Piston rod stuffing box

Stuffing box drain oil cleaning system

Seawater cooling

Seawater cooling system

Jacket water cooling

Jacket water cooling system
Deaerating tank
Deaerating tank, alarm device

Central cooling system

Central cooling water system
Deaerating tank
Deaerating tank, alarm device

2025-06-19 - en

Fuel oil system

Fuel oil heating chart
Fuel oil system
Fuel oil venting box
Fuel oil filter

Compressed air

Starting air system

Scavenge air

Scavenge air drain system

Air cooler cleaning

Air cooler cleaning system

Exhaust gas

Exhaust pipes, bracing
Exhaust pipe system, dimensions

Engine room crane

Engine room crane capacity, overhauling space

Torsiograph arrangement

Torsiograph arrangement

Shaft earthing device

Earthing device

Fire extinguishing in scavenge air space

Fire extinguishing in scavenge air space

Instrumentation

Axial vibration monitor

Engine seating

Profile of engine seating
Epoxy chocks
Alignment screws

2025-06-19 - en

Holding-down bolts

Holding-down bolt
Round nut
Distance pipe
Spherical washer
Spherical nut
Assembly of holding-down bolt
Protecting cap
Arrangement of holding-down bolts

Side chocks

Side chocks
Liner for side chocks, starboard
Liner for side chocks, port side

End chocks

Stud for end chock bolt
End chock
Round nut
Spherical washer, concave
Spherical washer, convex
Assembly of end chock bolt
Liner for end chock
Protecting cap

Engine top bracing

Top bracing outline
Top bracing arrangement
Friction materials
Top bracing instructions
Top bracing forces
Top bracing tension data

Shaft line, in engine room

Static thrust shaft load
Fitted bolt

Power take-off

List of capacities
PTO/RCF arrangement,if fitted

Large spare parts, dimensions

Connecting rod studs
Cooling jacket
Crankpin bearing shell
Crosshead bearing
Cylinder cover stud

2025-06-19 - en

Cylinder cover
Cylinder liner
Exhaust valve
Exhaust valve bottom piece
Exhaust valve spindle
Exhaust valve studs
Fuel valve
Main bearing shell
Main bearing studs
Piston complete
Starting valve
Telescope pipe
Thrust block segment
Turbocharger rotor

Gaskets, sealings, O-rings

Gaskets, sealings, O-rings

Material sheets

Everllence standard sheets Nos.:
- S19R
- S45R
- S25Cr1
- S34Cr1R
- C4

Engine production and installation-relevant documentation

Main engine production records, engine installation drawings

Installation of engine on board
Dispatch pattern 1, or
Dispatch pattern 2
Check of alignment and bearing clearances
Optical instrument or laser
Reference sag line for piano wire
Alignment of bedplate
Piano wire measurement of bedplate
Check of twist of bedplate
Crankshaft alignment reading
Bearing clearances
Check of reciprocating parts
Production schedule Inspection after shop trials
Dispatch pattern, outline
Preservation instructions

Shop trials

Shop trials, delivery test
Shop trial report

2025-06-19 - en

Quay trial and sea trial

Stuffing box drain cleaning
Fuel oil preheating chart
Flushing of lubricating oil system
Fresh water system treatment
Fresh water system preheating
Quay trial and sea trial
Adjustment of control air system
Adjustment of fuel pump
Heavy fuel operation
Guidance values automation

Flushing procedures

Lubricating oil system cleaning instruction

Tools

Engine tool

List of tools
Outline dimensions, main tools

List of tools

Tool panels

Engine seating tools

Hydraulic jack for holding down bolts
Hydraulic jack for end chock bolts

Auxiliary equipment

Ordered auxiliary equipment

2025-06-19 - en

This page is intentionally left blank

01 Engine Design
02 Engine Layout and Load Diagrams, SFOC, dot 5
03 Turbocharger Selection & Exhaust Gas Bypass
04 Electricity Production
05 Installation Aspects
06 List of Capacities: Pumps, Coolers & Exhaust Gas
07 Fuel
08 Lubricating Oil
09 Cylinder Lubrication
10 Piston Rod Stuffing Box Drain Oil
11 Low-temperature Cooling Water
12 High-temperature Cooling Water
13 Starting and Control Air
14 Scavenge Air
15 Exhaust Gas
16 Engine Control System
17 Vibration Aspects
18 Monitoring Systems and Instrumentation
19 Dispatch Pattern, Testing, Spares and Tools
20 Project Support and Documentation
21 Appendix

This page is intentionally left blank

Symbols for piping and instrumentation diagrams

Lines, pipes, etc.

	Line, primary process
	Line, secondary process
	Control line, general type
	Control line, capillary type
	Lines connected
	Crossing lines, connected
	Crossing lines, not connected
	Interruption of pipeline
P1	Interruption of pipeline with reference indication
	Pipeline or duct with thermal insulation
	Pipeline or duct with thermal insulation, end
	Pipeline with thermal insulation, heated or cooled by a separate circuit
	Pipeline with thermal insulation, heated or cooled by a separate circuit, end
	Jacketed (double walled) pipeline with thermal insulation
	Jacketed (double walled) pipeline with thermal insulation, end
	Jacketed (double walled) pipeline
	Jacketed (double walled) pipeline, end
	Change of pipe diameter, pipe reducer
	Pipe slope, located above pipeline

2026-03-05 - en

	Interlocked, to be located in interlocked line
NO	Indication of valve normally open
NC	Indication of valve normally closed
	Indication of specification boundary

Flanges, connections and other in-line pipe fittings

	Flange, single
	Flange coupling, flange pair, blind flange
	Flange coupling, clamped
	Screw joint
	Welded joint
	Quick release coupling
	Quick release coupling, automatically closing when uncoupled
	End cap, threaded
	End cap
	Orifice
	Swing blind, closed
	Swing blind, open
	Rupture disc
	Siphon
	Boss
	Boss with intersection pipe

2026-03-05 - en

	Spray nozzle, single
	Spray nozzle, multiple

Pipe supports

	Pipe support, fixation type
	Pipe support, sliding type

Wall penetrations, drains and vents

	Wall or roof penetration, general
	Wall or roof penetration, general, jacketed (sleeved) pipeline
*	Wall or roof penetration, sealed. * Must be replaced by a designation for the type of seal, e.g. fire
	Drain, funnel, etc.
	Drain pan
	Vent, outlet to atmosphere
	Vent, outlet to atmosphere outside enclosure

Valve symbols

	2-way on-off valve, straight type, general
	2-way on-off valve, angle type, general
	3-way valve, general
	4-way valve, general
	Non-return function, check function, flow left to right
	Control valve, straight type, general

2026-03-05 - en

	Control valve, angle type, general
	Control valve, 3-way type, general
	Preset control valve, e.g. flow balancing valve
	Safety function, straight type general, inlet/internal side to the left. Opening pressure must be stated
	Safety function, angle type general, inlet/internal side bottom. Opening pressure must be stated
	Breather valve, straight type general with safety function, e.g. tank overpressure/vacuum function
	Breather valve, angle type general with safety function, e.g. tank overpressure/vacuum function
	3-way plug valve, L-bore, general
	3-way plug valve, T-bore, general
	4-way plug valve, double L-bore, general

Supplementary valve symbols

	Valve, globe type
	Valve, gate type
	Valve, butterfly type
	Valve, ball type
	Valve, piston or plunger type
	Valve, plug type
	Valve, diaphragm type
	Valve, hose type
	Valve, needle type

2026-03-05 - en

Manual operators

	Manually operated
	Manually operated, by pushing
	Manually operated, by pulling
	Manually operated, by pulling and pushing
	Manually operated, by a lever
	Manually operated, by a pedal
	Manually operated, incl. locking device

Mechanical operators

	Mechanically operated, by weight
	Mechanically operated, by float
	Mechanically operated, by spring

Electric drivers

	Electric motor
	Electric motor, adjustable

Automatic actuators

	Actuator, without indication of type
	Single-acting hydraulic actuator
	Double-acting hydraulic actuator
	Single-acting pneumatic actuator

2026-03-05 - en

	Double-acting pneumatic actuator
	Single-acting diaphragm actuator
	Double-acting diaphragm actuator
	Single- or double-acting fluid actuator (for double-acting, two pilot lines are needed)
	Electromagnetic actuator
	Self-operated pressure sustain control diaphragm. Left side equal to upstream to valve
	Self-operated pressure reducer control diaphragm. Right side equal to downstream from valve

Spindle information, e.g. safety

	Automatic return, fail safe to close (FC)
	Automatic return, fail safe to open (FO)
	Quick-closing (QC)
	Quick-opening (QO)
	Double-acting, fail freeze
	Double-acting, fail freeze, drifting against open position
	Double-acting, fail freeze, drifting against closed position
	Limit switch, mechanical type

Flowmeters

F	Flowmeter, general
	Flowmeter, propeller, turbine and screw type
	Flowmeter, orifice type

2026-03-05 - en

	Flowmeter, flow nozzle type
	Flowmeter, venturi type
	Flowmeter, pitot tube type
	Flowmeter, vortex type
	Flowmeter, ultrasonic in-line type
	Flowmeter, ultrasonic clamp-on type
	Flowmeter, magnetic type
	Flowmeter, Coriolis type
	Flow switch, paddle type

Various

	Air release valve
	Condensate release valve
	Restrictor, multistage type
	Flow straightener
	Viewing glass
	Silencer
	Flow restriction
	Flow restriction, adjustable
	Level indicator

Dampers

	2-way on-off damper, general

2026-03-05 - en

	Multi-leaf damper, louvre type
	3-way on-off damper, general
	Non-return damper, general
	Safety damper, general

Safety devices other than valves

	Flame arrester, general
	Flame arrester, explosion-proof
	Flame arrester, fire-resistant
	Flame arrester, detonation-proof

Expansions

	Expansion loop
	Expansion sleeve
N	Flexible coupling
	Expansion joint/compensator bellow
	Flexible pipe, hose

Liquid pumps

	Pump, general
	Pump, positive displacement type
	Pump, centrifugal type
	Pump, hand type

2026-03-05 - en

	Pump, gear type
	Pump, screw type
	Pump, piston type
	Pump, piston radial type
	Pump, membrane type
	Pump, ejector type

Fans, ventilators, blowers, and compressors

	Fan, ventilator, blower, compressor, general
	Fan, ventilator, blower, compressor, rotary vane type
	Fan, ventilator, blower, compressor, impeller type
	Fan, ventilator, blower, compressor, screw type
	Fan, ventilator, blower, compressor, reciprocating piston type
	Fan, ventilator, blower, compressor, rotary reciprocating piston type
	Fan, ventilator, blower, compressor, reciprocating diaphragm type
	Fan, ventilator, blower, compressor, turbo type
	Fan, ventilator, blower, compressor, rotary piston type, e.g. Roots type
T C	Turbocharger

Filters, separators

	Screen, strainer, general
	Screen, strainer with pit for draining
	In-line strainer, general

2026-03-05 - en

	Cartridge filter, bag filter, etc., general
	Cartridge filter, bag filter, etc., flow direction outside - in, general
	Cartridge filter, etc., flow direction inside - out, general
	Permanent magnet filter
	Filter with backflush, Bernoulli type
	Filter with backflush
	Separator, cyclone type
	Separator, centrifuge type
	Separator, impact type

Heat exchangers

	Heat exchanger, general
	Condenser with hot well
	Electrical heater, superheater
	Heat exchanger with plates
	Heat exchanger with tubes
	Heat exchanger with ubend tubes
	Heat exchanger with coil-shaped tubes
	Electrical heating element
	Heating or cooling coil
	Finned tube

2026-03-05 - en

Tanks

	Open tank, basin
	Closed tank
	Closed tank with sloped bottom
	Tank with flat bottom and conical roof
	Tank with flat bottom and dished roof
	Vessel with dished ends
	Vessel with spherical ends
	Accumulator
	Gas cylinder

Instrumentation, general

	Instrument with two letters, e.g. PI
	Instrument with three letters, e.g. DPI

079 07 70-5.10.0

Fig. 21.00.01: P&ID – basic symbols

2026-03-05 - en

This page is intentionally left blank

2026-03-05 - en

List of abbreviations

A

ACC	automatic combustion control
ACCo	adaptive cylinder oil control
ACS	ammonia capture system
ACU	auxiliary control unit
AFR	air-fuel ratio
AMS	alarm and monitoring system
ATDC	after top dead centre
AVD	axial vibration damper
AWC	adverse weather condition

B

BHP	brake horsepower
BMEP	brake mean effective pressure
BN	base number
BOG	boil-off gas
BSR	barred speed range
BTDC	before top dead centre
BWMS	bearing wear monitoring system

C

CA	crank angle
CAD	crank angle degree
CCU	cylinder control unit
CEAS	computerised engine application system
CF	carbon factor
CII	carbon intensity indicator
CL	controlled leakage
CNG	compressed natural gas
CoCoS	computer controlled surveillance
COL	controlled oil level
CPP	controllable pitch propeller
CPR	controlled pressure relief
CPU	central processing unit
CR	common rail
CWCU	cooling water control unit

D

DF	dual fuel
DLF	dynamic limiter function
DMA	distillate marine A (marine gas oil fuel grade)
DSO	design specification order
DUN	design update note

E

ECA	emission control area
EC-MOP	engine control – main operating panel
ECR	engine control room
ECS	engine control system
EcoEGR	name of SFOC-optimised version of the EGR system (Tier III technology)
ECU	engine control unit
EEDI	energy efficiency design index
EEXI	energy efficiency existing ship index
EGB	exhaust gas bypass
EGB-LL	EGB low-load
EGB-PL	EGB part-load
EGR	exhaust gas recirculation
EGRBP	exhaust gas recirculation bypass
EGRC	exhaust gas recirculation cooler
EGRTC	exhaust gas recirculation turbocharger cut-out
EHP	engine handle panel
EICU	engine interface control unit
ELBI	electronic booster injection
ELBI	electronic block injection
ELFI	electronic fuel injection
ELGI	electronic gas injection

2025-06-19 - en

ELGIB	electronic gas injection block
ELSQ	electronic sequential valve
ELVA	electronic valve actuation
ELWC	electronic window control
ELWI	electronic window valve
EMG	engine mounted generator
EMS	engine management services
ESAL	engine supported air lubrication
ESP	emergency stop panel
EU ETS	EU Emissions Trading System

F

FAME	fatty acid methyl ester
FAT	factory acceptance test
FBIV	fuel booster injection valve
FBIVM	fuel booster injection valve for methanol
FBIVP	fuel booster injection valve for propane
FBIVS	fuel booster injection valve for sequential
FC	frequency converter
FCV	flow control valve
FF	floating frequency
FGIV	fuel gas injection valve
FGSS	fuel gas supply system
FPP	fixed pitch propeller
FIV	fuel injection valve
FIVA	fuel injection valve actuator
FO	fuel oil
FRC	fuel-ratio control
FSN	filtered smoke number
FVT	fuel valve train

G

GACU	gas auxiliary control unit
GAV	gas admission valve
GCCO	gas cylinder cut-out
GCR	gear constant ratio
GCRV	gas channel relief valve
GCSU	gas cylinder safety unit
GCU	gas combustion unit
GPCU	gas plant control unit
GPSU	gas plant safety unit
genset	generating set
GHG	greenhouse gas
GI	gas injection (engine designation)
GIE	gas injection ethane (engine designation)
GIV	gas injection valve
GRU	gas regulation unit
GVT	gas valve train
GVU	gas valve unit
GWP	global warming potential

H

HC	hydrocarbon
HCU	hydraulic cylinder unit
HCUS	hydraulic cylinder unit - sequential
HFO	heavy fuel oil
HD HHI	Hyundai Heavy Industries
HP	high pressure
HPS	hydraulic power supply
HPSCR	high-pressure selective catalytic reduction
HPT	high-pressure tuning
HR	heavy running
HRR	heat release rate
HSFO	high-sulphur fuel oil
HT	high temperature
HVO	hydrotreated vegetable oil

2025-06-19 - en

I

IFPS	integrated front-end power system
IGC	International Code for the Construction and Equipment of Ships Carrying Liquefied Gases in Bulk
IGF	International Code of Safety for Ship Using Gases or Other Low-flashpoint Fuels
IMEP	indicated mean effective pressure
IMO	International Maritime Organization
ISO	International Organization for Standardization

L

LCV	lower calorific value
LDCL	load dependent cylinder liner (cooling water system)
LEG	liquefied ethane gas
LEL	lower explosion limit
LFF	low-flashpoint fuel
LFSS	low-flashpoint-fuel supply system
LGI	liquid gas injection (engine designation)
LGIA	liquid gas injection ammonia (engine designation)
LGIM	liquid gas injection methanol (engine designation)
LGIM-W	LGIM with water emulsion (engine designation)
LGIP	liquid gas injection LPG (engine designation)
LHV	lower heating value
LL	licence letter
LNG	liquefied natural gas
LOP	local operating panel
LP	low pressure
LPG	liquefied petroleum gas
LPSCR	low-pressure selective catalytic reduction
LR	light running
LRM	light running margin
LS	low sulphur
LSFO	low-sulphur fuel oil
LT	low temperature

M

MARPOL	International Convention for the Prevention of Pollution from Ships
MBIV	micro-booster injection valve
MCR	maximum continuous rating
MDO	marine diesel oil
MEP	mean effective pressure
MEPC	Marine Environment Protection Committee (MEPC 80 – 80th session of marine environment protection committee, July 2023)
MGV	master gas valve
MHI	Mitsubishi Heavy Industries
MHP	manoeuvre handle panel
MIP	mean indicated pressure
MGO	marine gas oil
MOP	main operating panel
MPC	multi purpose controller
MSC	Maritime Safety Committee (MSC.1/Circ.1621 Interim Guidelines For The Safety Of Ships Using Methyl/Ethyl Alcohol As Fuel)

2025-06-19 - en

N

NECA	nitrogen oxides (NO_x) emission control area
NMCR	nominal maximum continuous rating
NOL	no objection letter
NPSH	net positive suction head

O

ORC	organic rankine cycle
OSU	oxygen sensor unit

P

PBIV	pilot booster injection valves
PCP	propulsion control panel
PCV	pressure control valve
PEVA	proportinal exhaust valve actuator
PFI	port fuel injection
PIV	pilot injection valve
PMS	power management system
PSC	propeller shaft clutch
PSV	pressure safety valve
PTG	power turbine generator
PTH	power take home
PTI	power take-in
PTO	power take-off
PVU	pump vaporiser unit

R

RCC	Research Centre Copenhagen
RCS	remote control system
RPM	revolutions per minute

S

SAC	scavenge air cooler
SACU	second fuel auxiliary control unit
SCR	selective catalytic reduction
SCSU	second fuel cylinder safety unit
SCSU	second fuel cylinder sensor unit
SDF	specified dual-fuel operation
SECA	sulphur oxide (SO_x) emission control area
SEQ	sequential
SF	synchronous frequency
SF	second fuel
SFOC	specific fuel oil consumption
SGC	specific gas consumption
SGAV	safe gas admission valve
SL	service letter
SMCR	specified MCR
SNG	synthetic natural gas
SOB	sealing oil block valve
SOLAS	Safety of Life at Sea (International Convention for the Safety of Life at Sea, 1974)
SOV	shut-off vlave
SPCU	second fuel plant control unit
SPOC	specific pilot oil consumption
SPSU	second fuel plant safety unit
SRS	supply and recirculation system
STC	sequential turbocharging
STG	steam turbine generator
SUC	sensor unit cabinet

2025-06-19 - en

T

TBO	time between overhaul
TC	turbocharger
TCCI	turbocharger cut-in
TCCO	turbocharger cut-out
TCEV	top-controlled exhaust valve
TDC	top dead centre
teu	twenty-foot equivalent unit
TIU	tacho interface unit
TOP	telegraph order panel
TVC	torsional vibration calculation

U

ULSF	ultra-low-sulphur fuel
ULSFO	ultra-low-sulphur fuel oil
UPS	uninterruptable power supply

V

VLSF	very-low-sulphur fuel
VLSFO	very-low-sulphur fuel oil

W

WASP	wind-assisted ship propulsion
WHRS	waste heat recovery system
WHS	water handling system
WIVA	window injection valve actuation
WtW	well-to-wake
WV	window valve
WVFC	Window Valve, Forced to Close

2025-06-19 - en

This page is intentionally left blank

2025-06-19 - en

Chemical nomenclature

Butane	C_4H_{10}
Calcium carbonate	$CaCo_3$
Methane	CH_4
Carbon dioxide	CO_2
Carbon monooxide	CO
Chloride	CL^-
Ethane	C_2H_6
Hydrogen	H_2
Methanol	CH_3OH
Methane	CH_4
Nitrogen oxides	NO_x
Nitrous oxides	N_2O
Ammonia	NH_3
Oxygen	O_2
Propane	C_3H_8
Sulphur oxide	SO_x
Sulphur dioxide	SO_2

2024-05-22 - en

This page is intentionally left blank

2024-05-22 - en