MAN 32/40CD TCF turbocharger variant

Project Guide – Marine

Four-stroke diesel engine compliant with IMO Tier III

Revision..... **06.2025/1.0**

2025-06-16 - 1.0

All data provided in this document is non-binding. This data serves informational purposes only and is especially not guaranteed in any way. Depending on the subsequent specific individual projects, the relevant data may be subject to changes and will be assessed and determined individually for each project. This will depend on the particular characteristics of each individual project, especially specific site and operational conditions.

Four-stroke diesel engine

MAN 32/40CD IMO Tier III Project Guide – Marine

MAN Energy Solutions SE
86224 Augsburg
GERMANY

Phone +49 (0) 821 322-0
Fax +49 (0) 821 322-3382
primeserv-germany@man-es.com
https://primeserv.man-es.com/

Copyright © 2025 MAN Energy Solutions
All rights reserved, including reprinting, copying (Xerox/microfiche) and translation.

2025-06-16 - 1.0

Table of contents

1 Introduction 11

1.1 Medium-speed propulsion engine programme 11

1.2 Engine description MAN 32/40CD TCF IMO Tier III 11

1.3 Engine overview and SCR system components 17

1.4 Turbocharger overview 22

1.4.1 View of a TCF type turbocharger 22

1.4.2 Compensator between turbine outlet (engine) and exhaust gas pipe (plant) 23

1.4.3 No additional masses allowed 24

2 Engine and operation 25

2.1 Approved applications and destination/suitability of the engine 25

2.2 Certification IMO Tier III 27

2.3 SCR – Special notes 27

2.3.1 Principle of SCR technology 27

2.3.2 System overview 28

2.3.3 Scope of supply 28

2.3.4 Operation 29

2.3.5 Boundary conditions for SCR operation 29

2.3.6 Performance coverage for SCR system 30

2.4 Engine design 32

2.4.1 Engine cross section 32

2.4.2 Engine designations – Design parameters 34

2.4.3 Turbocharger assignments 35

2.4.4 Engine main dimensions, weights and views – Electric propulsion, auxiliary GenSet 36

2.4.5 Engine main dimensions, weights and views – Mechanical propulsion 38

2.4.6 Main dimensions, weights and views of SCR components 39

2.4.7 Engine inclination 43

2.4.8 Engine equipment for various applications 44

2.5 Ratings (output) and speeds 48

2.5.1 General remark 48

2.5.2 Standard engine ratings 48

2.5.3 Engine ratings (output) for different applications 49

2.5.4 Derating, definition of P Operating 50

2.5.5 Engine speeds and related main data 51

2.5.6 Speed adjusting range 52

2.6 Increased exhaust gas pressure due to exhaust gas after treatment installations 52

2.7 Starting 54

2.7.1 General remarks 54

2.7.2 Type of engine start 55

2.7.3 Requirements on engine and plant installation 55

2.7.4 Starting conditions 57

2025-06-16 - 1.0

2.8 Start-up and load application 59
2.8.1 General remarks 59
2.8.2 Definitions and requirements 59
2.8.3 Load application – Continuous loading 60
2.8.4 Load application – Load steps (for electric propulsion/auxiliary GenSet) 63
2.8.5 Load application for mechanical propulsion (FPP and CPP) 65
2.9 Low-load operation 68
2.10 Engine load reduction and engine stop 70
2.11 Engine load reduction as a protective safety measure 72
2.12 Engine operation under arctic conditions 73
2.13 GenSet operation 77
2.13.1 Operating range for GenSet/electric propulsion 77
2.13.2 Available outputs and permissible frequency deviations 78
2.13.3 Generator operation/electric propulsion – Power management 79
2.13.4 Alternator – Reverse power protection 80
2.13.5 Earthing measures of diesel engines and bearing insulation on alternators 81
2.14 Propeller operation, suction dredger (pump drive) 83
2.14.1 General remark for operating ranges 83
2.14.2 Operating range for controllable pitch propeller (CPP) 84
2.14.3 General requirements for the CPP propulsion control 86
2.14.4 Operating range for fixed pitch propeller (FPP) 90
2.14.5 General requirements for the FPP propulsion control 92
2.14.6 Operating range for mechanical pump drive 94
2.15 Fuel oil, urea, lube oil, starting air and control air consumption 96
2.15.1 Fuel oil consumption for emission standard: IMO Tier III 96
2.15.2 Urea consumption for emission standard IMO Tier III 101
2.15.3 Lube oil consumption 101
2.15.4 Compressed air consumption – SCR system 103
2.15.5 Starting air and control air consumption 103
2.15.6 Recalculation of fuel consumption dependent on ambient conditions 104
2.15.7 Influence of engine aging on fuel consumption 105
2.16 Service support pumps for lower speed range of FPP applications 106
2.17 Planning data for emission standard: IMO Tier II – Auxiliary GenSet 107
2.17.1 Nominal values for cooler specification – MAN L32/40CD TCF IMO Tier II – Auxiliary GenSet 107
2.17.2 Nominal values for cooler specification – MAN V32/40CD TCF IMO Tier II – Auxiliary GenSet 109
2.17.3 Flow scheme for cooler specification – MAN L/V32/40CD TCF IMO Tier II 111
2.17.4 Temperature basis, nominal air and exhaust gas data – MAN L32/40CD TCF IMO Tier II – Auxiliary GenSet 112
2.17.5 Temperature basis, nominal air and exhaust gas data – MAN V32/40CD TCF IMO Tier II – Auxiliary GenSet 113
2.17.6 Load specific values at ISO conditions – MAN L/V32/40CD TCF IMO Tier II – Auxiliary GenSet 114
2.17.7 Load specific values at tropical conditions – MAN L/V32/40CD TCF IMO Tier II – Auxiliary GenSet 115

2025-06-16 - 1.0

2.18 Planning data for emission standard: IMO Tier II – Electric propulsion 116
2.18.1 Nominal values for cooler specification – MAN L32/40CD TCF IMO Tier II – Electric propulsion 116
2.18.2 Nominal values for cooler specification – MAN V32/40CD TCF IMO Tier II – Electric propulsion 118
2.18.3 Flow scheme for cooler specification – MAN L/V32/40CD TCF IMO Tier II 120
2.18.4 Temperature basis, nominal air and exhaust gas data – MAN L32/40CD TCF IMO Tier II – Electric propulsion 121
2.18.5 Temperature basis, nominal air and exhaust gas data – MAN V32/40CD TCF IMO Tier II – Electric propulsion 122
2.18.6 Load specific values at ISO conditions – MAN L/V32/40CD TCF IMO Tier II – Electric propulsion 123
2.18.7 Load specific values at tropical conditions – MAN L/V32/40CD TCF IMO Tier II – Electric propulsion 124
2.19 Planning data for emission standard: IMO Tier II – Mechanical propulsion with CPP 125
2.19.1 Nominal values for cooler specification – MAN L32/40CD TCF IMO Tier II – Mechanical propulsion with CPP 125
2.19.2 Nominal values for cooler specification – MAN V32/40CD TCF IMO Tier II – Mechanical propulsion with CPP 127
2.19.3 Flow scheme for cooler specification – MAN L/V32/40CD TCF IMO Tier II 129
2.19.4 Temperature basis, nominal air and exhaust gas data – MAN L32/40CD TCF IMO Tier II – Mechanical propulsion with CPP 130
2.19.5 Temperature basis, nominal air and exhaust gas data – MAN V32/40CD TCF IMO Tier II – Mechanical propulsion with CPP 131
2.19.6 Load specific values at ISO conditions – MAN L/V32/40CD TCF IMO Tier II – Mechanical propulsion with CPP, constant speed 132
2.19.7 Load specific values at tropical conditions – MAN L/V32/40CD TCF IMO Tier II – Mechanical propulsion with CPP, constant speed 133
2.20 Planning data for emission standard: IMO Tier II – Mechanical propulsion with FPP 134
2.20.1 Nominal values for cooler specification – MAN L32/40CD TCF IMO Tier II – Mechanical propulsion with FPP 134
2.20.2 Nominal values for cooler specification – MAN V32/40CD TCF IMO Tier II – Mechanical propulsion with FPP 136
2.20.3 Flow scheme for cooler specification – MAN L/V32/40CD TCF IMO Tier II 138
2.20.4 Temperature basis, nominal air and exhaust gas data – MAN L32/40CD TCF IMO Tier II – Mechanical propulsion with FPP 139
2.20.5 Temperature basis, nominal air and exhaust gas data – MAN V32/40CD TCF IMO Tier II – Mechanical propulsion with FPP 140
2.20.6 Load specific values at ISO conditions – MAN L/V32/40CD TCF IMO Tier II – Mechanical propulsion with FPP 141
2.20.7 Load specific values at tropical conditions – MAN L/V32/40CD TCF IMO Tier II – Mechanical propulsion with FPP 142
2.21 Planning data for emission standard: IMO Tier II – Suction dredger/pumps (mechanical drive) 143
2.21.1 Nominal values for cooler specification – MAN L32/40CD TCF IMO Tier II – Suction dredger/pumps (mechanical drive) 143
2.21.2 Nominal values for cooler specification – MAN V32/40CD TCF IMO Tier II – Suction dredger/pumps (mechanical drive) 145
2.21.3 Flow scheme for cooler specification – MAN L/V32/40CD TCF IMO Tier II 147

2025-06-16 - 1.0

2.21.4 Temperature basis, nominal air and exhaust gas data – MAN L32/40CD TCF IMO Tier II – Suction dredger/pumps (mechanical drive) 148
2.21.5 Temperature basis, nominal air and exhaust gas data – MAN V32/40CD TCF IMO Tier II – Suction dredger/pumps (mechanical drive) 149
2.21.6 Load specific values at ISO conditions – MAN L/V32/40CD TCF IMO Tier II – Suction dredger/pumps (mechanical drive) 150
2.21.7 Load specific values at tropical conditions – MAN L/V32/40CD TCF IMO Tier II – Suction dredger/pumps (mechanical drive) 151
2.22 Operating/service temperatures and pressures 152
2.23 Leakage rate 159
2.24 Filling volumes 159
2.25 Venting amount of crankcase and turbocharger 160
2.26 Exhaust gas emission 161
2.26.1 Maximum permissible NOx emission limit value IMO Tier II and IMO Tier III 161
2.26.2 Smoke emission index (FSN) 161
2.26.3 Exhaust gas – possible components and visibility 162
2.26.4 Emission-related installation instruction for engines 164
2.27 Noise 167
2.27.1 Airborne noise 167
2.27.2 Intake noise 168
2.27.3 Exhaust gas noise 170
2.27.4 Blow-off noise example 172
2.27.5 Noise and vibration – Impact on foundation 173
2.28 Vibration 176
2.28.1 Torsional vibrations 176
2.29 Requirements for power drive connection (static) 179
2.30 Requirements for power drive connection (dynamic) 181
2.30.1 Moments of inertia – Crankshaft, damper, flywheel 181
2.30.2 Balancing of masses – Firing order 182
2.30.3 Static torque fluctuation 184
2.31 Power transmission 187
2.31.1 Flywheel arrangement 187
2.32 Arrangement of attached pumps 193
2.33 Foundation 196
2.33.1 General requirements for engine foundation 196
2.33.2 Rigid seating 197
2.33.3 Chocking with synthetic resin 203
2.33.4 Resilient seating 206
2.33.5 Recommended configuration of foundation 208
2.33.6 Engine alignment 216
3 Engine automation 217
3.1 SaCoSone system overview 217
3.1.1 Cybersecurity guidelines 226
3.1.1.1 Terms, abbreviations and definitions 226
3.1.1.2 System Overview 227

2025-06-16 - 1.0

3.1.1.3 Physical security of SaCoS 228
3.1.1.4 Secure access and storage of SaCoS data 228
3.1.1.5 Secure use of the Engine Vault PC in the DLC 228
3.1.1.6 Securing Z1:Control(Customer) 228
3.1.1.7 Maintaining network segmentation 228
3.1.1.8 Preparation for security incidents 229
3.1.1.9 Safe disposal 229
3.1.1.10 User account management 229
3.1.1.11 Security Incident Report 230

3.2 Power supply and distribution 230
3.3 Safety architecture 234
3.4 Operation 236
3.5 Functionality 237
3.6 Interfaces 240
3.7 Data Logging 242
3.8 Technical data 242
3.9 Installation requirements 244
3.10 Engine-located measuring and control devices 246

4 Specification for engine supplies 253
4.1 Explanatory notes for operating supplies – Diesel engines 253
4.1.1 Lube oil 253
4.1.2 Fuel 253
4.1.3 Nozzle cooling 254
4.1.4 Intake air 254
4.1.5 Urea 255
4.1.6 Compressed air – SCR catalyst 255
4.2 Specification of lubricating oil (SAE 40) for operation with DMA/DMB, DFA, DFB 255
4.3 Specification of lubricating oil (SAE 40) for residual fuel operation (HFO) 257
4.4 Diesel fuel (DMA, DFA) specification 260
4.5 Marine diesel oil (DMB, DFB) specification 265
4.6 Residual fuel (HFO) specification 268
4.7 Viscosity-temperature diagram (VT diagram) 278
4.8 Specification of engine coolant 279
4.9 Coolant inspecting 284
4.10 Cooling water system cleaning 286
4.11 Specification of intake air (combustion air) 288
4.12 Specification of compressed air 289
4.13 Specification of urea solution 290

5 Engine supply systems 293
5.1 3D Engine Viewer – A support programme to configure the engine room 293
5.2 Basic principles for pipe selection 294
5.2.1 External pipe dimensioning 294

2025-06-16 - 1.0

5.2.2 Specification of materials for piping 295
5.2.3 Installation of flexible pipe connections 296
5.2.4 Condensate amount in charge air pipes and air vessels....301

5.3 Media interfaces 303

5.4 Lube oil system 310

5.4.1 Internal lube oil system 310
5.4.2 External lube oil system – Description....312
5.4.3 External lube oil system – Low-speed operation lube oil system 321
5.4.4 External lube oil system – Prelubrication/postlubrication 323
5.4.5 External lube oil system – Lube oil outlets....324
5.4.6 External lube oil system – Lube oil service tank 326
5.4.7 External lube oil system – Lube oil Filter....331

5.5 Crankcase vent and lube oil tank vent 332

5.6 Cooling water system 334

5.6.1 Internal cooling water system 334
5.6.2 External cooling water system – Description....336
5.6.3 External cooling water system – Collection and supply system....347
5.6.4 External cooling water system – Low-speed operation cooling water system 348
5.6.5 External cooling water system – Miscellaneous items 350
5.6.6 External cooling water system – Nozzle cooling system 351
5.6.7 External cooling water system – Nozzle cooling water module 352
5.6.8 External cooling water system – HT cooling water preheating module....355

5.7 Bilge water/oily water 356

5.7.1 Introduction....356
5.7.2 Turbocharger washing equipment 356
5.7.3 Cleaning of charge air cooler 359
5.7.4 Condensate monitoring tank drain....360
5.7.5 Nozzle cooling water drain....361
5.7.6 Condensate drain starting air system....361

5.8 Fuel oil system 362

5.8.1 Internal fuel system....362
5.8.2 External fuel system – DMB (Marine diesel oil) treatment system 364
5.8.3 External fuel system – Marine diesel oil (MDO) supply system for diesel engines....368
5.8.4 External fuel system – Residual fuel (HFO) treatment system 377
5.8.5 External fuel system – Heavy fuel oil (HFO) supply system 382
5.8.6 External fuel system – Fuel oil supply at blackout conditions 395

5.9 Compressed air system 396

5.9.1 Internal compressed air system 396
5.9.2 External compressed air system – Description 398
5.9.3 External compressed air system – Dimensioning starting air receivers, compressors.401
5.9.4 External compressed air system – Jet assist 403

5.10 Engine room ventilation and intake air 404

5.10.1 External general information 404
5.10.2 External air supply with or without arctic conditions 406

5.11 Exhaust gas system 411

2025-06-16 - 1.0

5.11.1 External exhaust gas system – General information 411
5.11.2 External components and assemblies of the exhaust gas system 412
5.12 SCR system 413
5.12.1 General 413
5.12.2 As-delivered conditions and packaging 413
5.12.3 Transportation and handling 413
5.12.4 Storage 414
5.12.5 Components and assemblies of the SCR system 414
5.12.6 Installation of the SCR system 417
5.12.7 Recommendations 417

6 Engine room planning 419
6.1 Installation and arrangement 419
6.1.1 General details 419
6.1.2 Installation drawings 420
6.1.3 Removal dimensions of piston and cylinder liner 425
6.1.4 3D Engine Viewer – A support programme to configure the engine room 431
6.1.5 Lifting device 432
6.1.6 Space requirement for maintenance 437
6.1.7 Major spare parts 438
6.1.8 Mechanical propulsion system arrangement 442
6.2 Exhaust gas ducting 444
6.2.1 Example: Ducting arrangement 444
6.2.2 External general details for Tier III SCR system duct arrangement 445
6.2.3 Position of the outlet casing of the turbocharger 446

7 Propulsion packages 449
7.1 General 449
7.2 Dimensions 450
7.3 Propeller layout data 452
7.4 Propeller clearance 452
7.5 Alphatronic 3000 propulsion control system 454

8 Electric propulsion plants 457
8.1 Advantages of electric propulsion 457
8.2 Losses in electric propulsion plants 457
8.3 Components of an electric propulsion plant 458
8.4 Electric propulsion plant design 459
8.5 Engine selection 460
8.6 E-plant, switchboard and alternator design 461
8.7 Over-torque capability 463
8.8 Power management 464
8.9 Example configurations of electric propulsion plants 465
8.10 High-efficient electric propulsion plants with variable speed GenSets (EPROX-DC) 470
8.11 Fuel-saving hybrid propulsion system (HyProp ECO) 472

2025-06-16 - 1.0

9 Annex 475

9.1 Safety instructions and necessary safety measures 475

9.1.1 General 475

9.1.2 Safety equipment and measures provided by plant-side 475

9.2 Programme for Factory Acceptance Test (FAT) 479

9.3 Engine running-in 485

9.4 Definitions 489

9.5 Abbreviations 494

9.6 Symbols 495

9.7 Preservation, packaging, storage 498

9.7.1 General 498

9.7.2 Storage location and duration 500

9.7.3 Follow-up preservation when preservation period is exceeded 500

9.7.4 Removal of corrosion protection 501

9.8 Engine colour 501

Index 503

2025-06-16 - 1.0

1 Introduction

1.1 Medium-speed propulsion engine programme

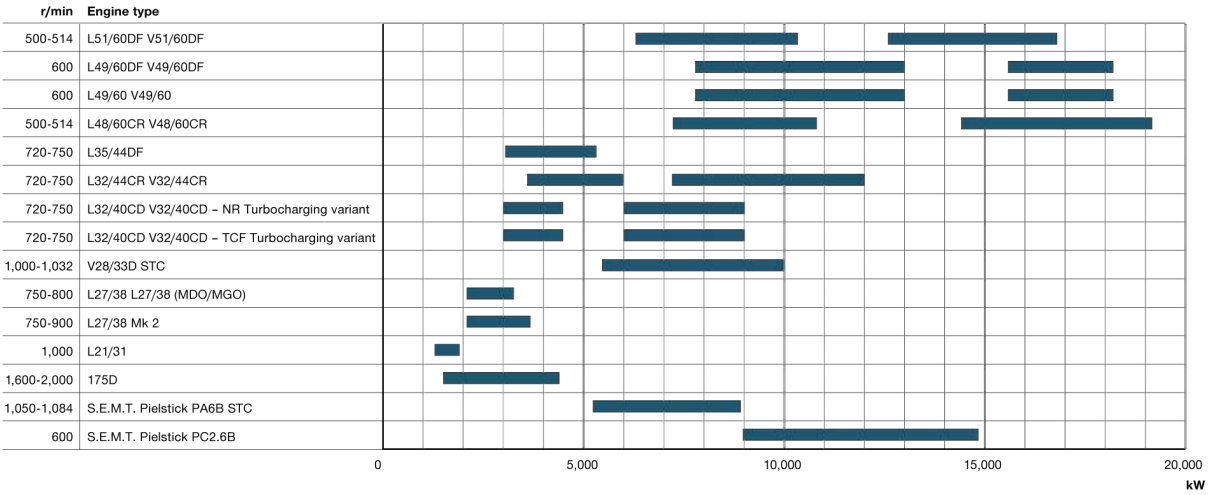

Figure 1: MAN Energy Solutions engine programme

1.2 Engine description MAN 32/40CD TCF IMO Tier III

General

The “Work Horse” MAN 32/40 is in service 24 hours a day. With a power output range of 3,000 to 9,000 kW, it is ideal for small and medium sized applications. The interacting of all important parts results to low wear rates and long maintenance intervals.

MAN Energy Solutions turbocharging system

Ready for the future with enhanced performance and efficiency – MAN Energy Solutions TCF turbochargers are from our latest generation of radial turbochargers and suitable for all speed ranges. They are designed for operation on conventional and future fuels. Main benefits of the TCF20 tubocharger on the 32/40CD are:

- Increased efficiency levels
- SFOC-, and cost savings
- CO_2 reductions
- Increased dynamic behaviour and acceleration

Fuels

The 32/40CD TCF can be operated with MGO (DMA), MDO (DMB) and with HFO up to a viscosity of 700 mm2/s (cSt) at 50°C. The fuel system is designed for fuel temperatures up to 150°C and starting and stopping the engine during HFO operation. Note the special chapters concerning synthetic fuels, FAME and residual marine fuels containing FAME.

2025-06-16 - 1.0

Fuels for operation with SCR catalyst

The MAN SCR components have been specially designed for operation with residual fuel (HFO) in accordance with specification DIN ISO 8217 up to sulphur content of max. 3.5% and optimised for our engine portfolio.

Operation with FAME - transesterified biofuel (optional)

In case of intended use of FAME fuels according to EN-14214 or ASTM D6751 and according to the additional requirements of MAN Energy Solutions (see paragraph FAME (fatty acid methyl ester) additive of 0.5 to 100% (DFA), Page 263 in section Diesel fuel (DMA, DFA) specification).

- Special considerations for fuel handling, storage and fuel preparation to be considered
- To be clarified, if special equipment on engine or within plant is needed
- Change of engine performance to be clarified

Contact MAN Energy Solutions if this option is needed.

Operation with synthetic fuels (optional)

Synthetic fuels such as HVO, BTL, CTL, GTL according to DIN EN 15940 differ in the procedure of production, but are identical in their fuel properties and need to comply to the requirements of MAN Energy Solutions (see paragraph "Synthetic fuels (DIN EN 15940)" in section Diesel fuel (DMA, DFA) specification).

In case of intended use of these synthetic diesel fuels:

- Special considerations for fuel handling, storage and fuel preparation have to be considered
- To be clarified, if special equipment on engine or within plant is needed
- Change of engine performance to be clarified

Due to the lower volumetric heat value than DMA in case of fixed engine setting a minor increase of the specific fuel consumption ($\Delta be_{42700,ISO}$ <+1,5%, [g/kWh]) and a slight decrease of NO_X-emissions is expected.

Contact MAN Energy Solutions if this option is needed.

Stepped piston

Forged dimensionally stable steel crown (with shaker cooling) made from high grade materials and skirt in spheroidal graphite cast iron (skirt also available in steel upon request). The stepped piston and the fire ring together prevent “bore polishing” of the cylinder liner, thereby reducing operating costs by keeping lubricating oil consumption consistently low. Chromium ceramic coating of the first piston ring with wear resistant ceramic particles in the ring surface results in minimal wear and tear, ensuring extremely long periods between maintenance.

Cylinder head

The cylinder head has optimised combustion chamber geometry for improved injection spray atomisation. This ensures balanced air-fuel mixture, reducing combustion residue, soot formation and improving fuel economy.

2025-06-16 - 1.0

Valves

Exhaust valves are designed with armoured, water cooled seats that keep valve temperatures down. Propellers on the exhaust valve shaft provide rotation by exhaust gas, resulting in the cleaning effect of the valve seat area during valve closing.

Cylinder liner

The precision machined cylinder liner and separate cooling water collar rest on top of the engine frame and is there isolated from any external deformation, ensuring optimum piston performance and long service life.

Device for variable injection timing (VIT)

The VIT is designed to influence injection timing and thus ignition pressure and combustion temperature. That enables engine operation in different load ranges well balanced between low NO_x emissions and low fuel consumption.

Sealed Plunger injection pumps (SP injection pumps)

The 32/40CD TCF conventional injection system is equipped with Sealed Plunger injection pumps. SP injection pumps have been designed for an operation with all specified fuels.

Benefit:

- The fuel and the lube oil within the injection pumps are completely separated and cannot get in contact with each other, so that the leakage fuel of the SP injection pumps can be completely reused again.
- For the same reason, there is no need for sealing oil anymore in the case of continuous DMA operation.

Note:
For reusing the operation leakage the fuel oil system must be changed. To specify the needed adaptions please contact MAN Energy Solutions for assistance.

Starting system – Starting air valves within cylinder head

The engine is equipped with starting air valves within some of the cylinder heads. On starting command, compressed air will be led in a special sequence into the cylinder and will push down the piston and turn thereby the crankshaft until a defined speed is reached.

Service friendly design

- Hydraulic tooling for tightening and loosening cylinder head nuts
- Clamps with quick release fasteners and/or clamp and plug connectors
- Generously sized access covers

Electronics – SaCoSone

The 32/40CD TCF is equipped with the classification society compliant safety and control system SaCoSone. SaCoSone combines all functions of modern engine management into one complete system.

SaCoSone offers:

- Integrated self-diagnosis functions
- Future prove design

2025-06-16 - 1.0

- Digital ready
- Maximum reliability and availability
- Simple use and diagnosis
- Quick exchange of modules
- Crankcase monitoring system plus oil mist detection As a standard for all our four-stroke medium-speed engines manufactured in Augsburg, these engines will be equipped with a crankcase monitoring system (CCM = splash oil & main bearing temperature) plus OMD (oil mist detection). OMD and CCM are integral part of the MAN Energy Solutions´ safety philosophy and the combination of both will increase the possibility to early detect a possible engine failure and prevent subsequent component damage.
- Crankcase monitoring system plus oil mist detection

  As a standard for all our four-stroke medium-speed engines manufactured in Augsburg, these engines will be equipped with a crankcase monitoring system (CCM = splash oil & main bearing temperature) plus OMD (oil mist detection). OMD and CCM are integral part of the MAN Energy Solutions´ safety philosophy and the combination of both will increase the possibility to early detect a possible engine failure and prevent subsequent component damage.

Cyber security

The marine certified safety and control system SaCoSone is compliant to the IACS UR E27 requirements for cyber resilience on-board equipment, which will get mandatory for ships contracted for construction or after 1st July 2024. A confirmation of compliance will be given by the main classification societies, ensuring the utmost benefit for our customers.

PrimeServ Assist - CEON (optional feature)

MAN PrimeServ Assist is our solution to support our customers in monitoring and assessing the condition of their equipment. Equipment connected to our MAN CEON cloud platform is monitored by MAN's advanced analytics running in the MAN CEON platform to detect degradations and optimisation potentials. MAN experts analyse root causes and define mitigating actions based on this data.

Benefits:

- Availability: Ensuring 24/7 engine availability by monitoring operating values and pro-actively advising on operating tasks.
- Efficiency: Optimize equipment performance and reduce fuel consumption and emissions by detecting degradations of performance influencing parameters over time.
- Maintenance: Reduce maintenance cost by evaluating aging of individual components over time and pro-active advising counter measures.

SCR technology

MAN Energy Solutions has developed its own SCR technology to be able to optimise the emissions technology and the engine performance in addition with the MAN Energy Solutions own SCR control programme for increased customer benefit.

2025-06-16 - 1.0

Common SCR systems require constantly high exhaust gas temperatures. The MAN Energy Solutions SCR system however is an integrated system (engine plus SCR) that is automatically adjusting the exhaust gas temperature in an optimal way to ensure ideal operation of both engine plus SCR.

For example, the engine is operating at optimum condition, however the system is registering an increasing back pressure over the SCR reactor. To resolve this, the regeneration feature of the integrated SCR system is activated and the waste gate engaged to increase exhaust gas temperature. After a short time, the SCR system is regenerated and the engine can continue operation in the design point area. Thus the SCR assures ideal engine operation by regenerating the SCR system whenever necessary to achieve minimum fuel oil consumption. Nevertheless, the SCR system complies with the IMO Tier III regulations on NO_x emissions at any time.

For the SCR reactor two designs are available to provide more flexibility to fit the reactor into the available space. The two reactor variants are named LPC and LPS. LPC is the standard reactor with a Low Pressure Compact design. The LPC reactor is equipped with a single layer of honeycombs resulting in a very low height.

The LPS is a Low Pressure Slim variant of the reactor with smallest footprint. Therefore the honeycombs are arranged in two layers. The honeycombs have different cell density per layer to keep the backpressure of the reactor on a low level.

MAN Energy Solutions total system competence

As the leading engine builder in the marine sector, MAN Energy Solutions has unrestricted access to the know-how required to design and execute highly efficient SCR systems for both new engines and retrofit applications on engines already in the field.

In MAN Energy Solutions´ case, this clear “Advantage” over other supplier of SCR systems is further multiplied by our status as a global leader in the design and manufacture of turbochargers and fuel injection systems for large engines. MAN Energy Solutions and its PrimeServ after-sales organisation is ideally placed to supply and service the optimum SCR system for your engine.

Core technologies in-house

As well as its expertise in engine design, development and manufacture, MAN Energy Solutions is also a leader in the engineering and manufacturing of the key technologies which determine the economic and ecological performance of a diesel engine and constitute the best offer for our customers:

- High-efficiency turbochargers
- Advanced-electronic fuel injection equipment
- Electronic hardware and software for engine control, monitoring and diagnosis
- High-performance exhaust gas after treatment systems

Our impressive array of computer aided design tools and one of the engine industry’s largest, best-equipped foundries allow us to decisively shorten product development and application engineering processes. Our mastery of these engine technologies is the firm foundation for:

- Low emissions
- Low-operating costs
- Low-life cycle costs

2025-06-16 - 1.0

- Long-service life

Committed to the future

MAN Energy Solutions is closely following and anticipating the upcoming requirements of the market, new fuel types arising and stricter emissions regulations in the making.
Accordingly new technologies are already under development at MAN Energy Solutions.
With this level of commitment MAN Energy Solutions` customers can plan with confidence.
Available technologies of exhaust gas after treatment and battery hybrid systems expand already our portfolio.

2025-06-16 - 1.0

1.3 Engine overview and SCR system components

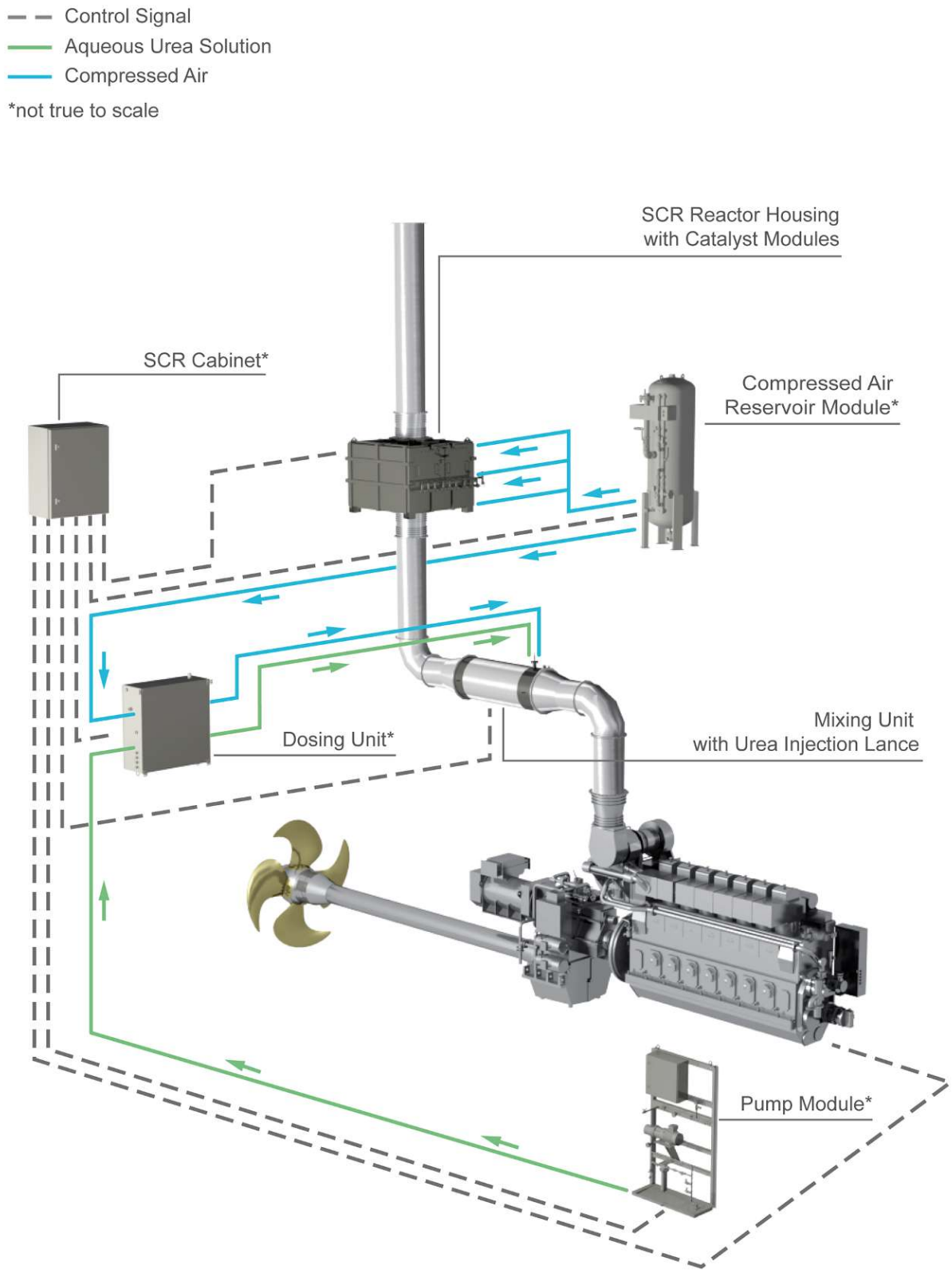

Figure 2: SCR system components overview (example)

2025-06-16 - 1.0

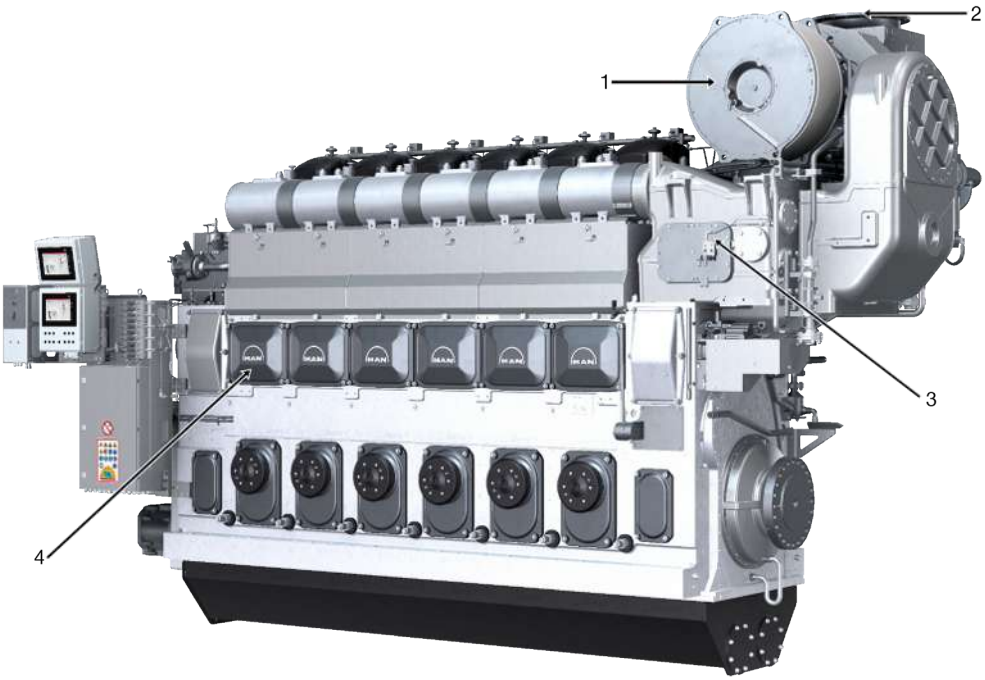

1 Silencer
2 Turbocharger exhaust outlet
3 Charge air cover
4 Camshaft cover

Figure 3: Engine overview L engine, view on coupling side (CS)

2025-06-16 - 1.0

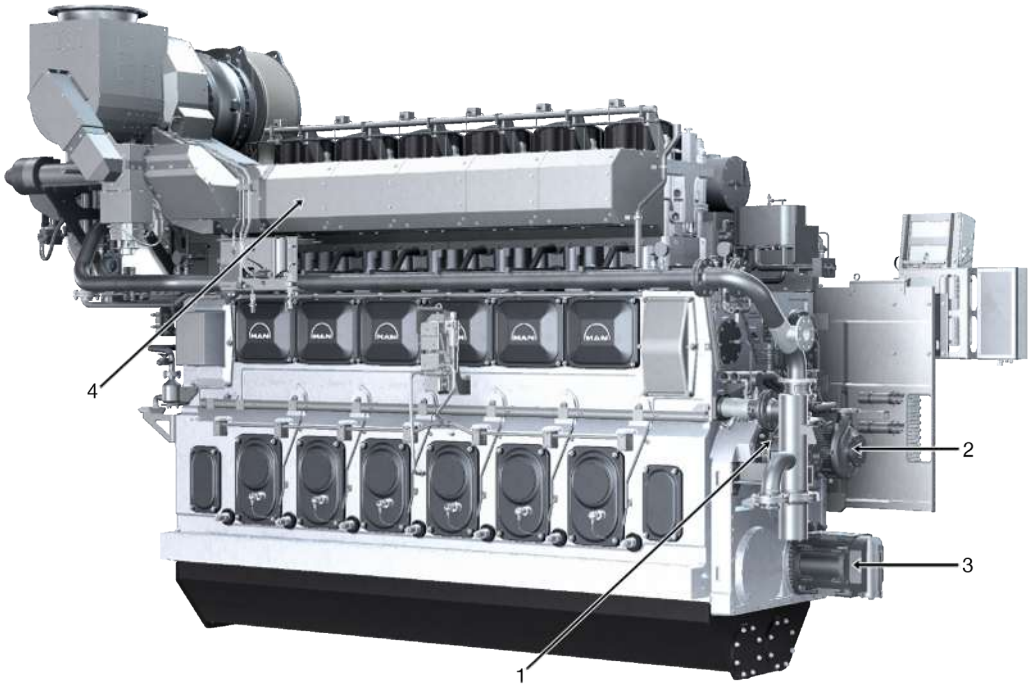

1 HT cooling water pump
2 LT cooling water pump
3 Lube oil pump
4 Exhaust heat shield

Figure 4: Engine overview L engine, view on counter coupling side (CCS)

2025-06-16 - 1.0

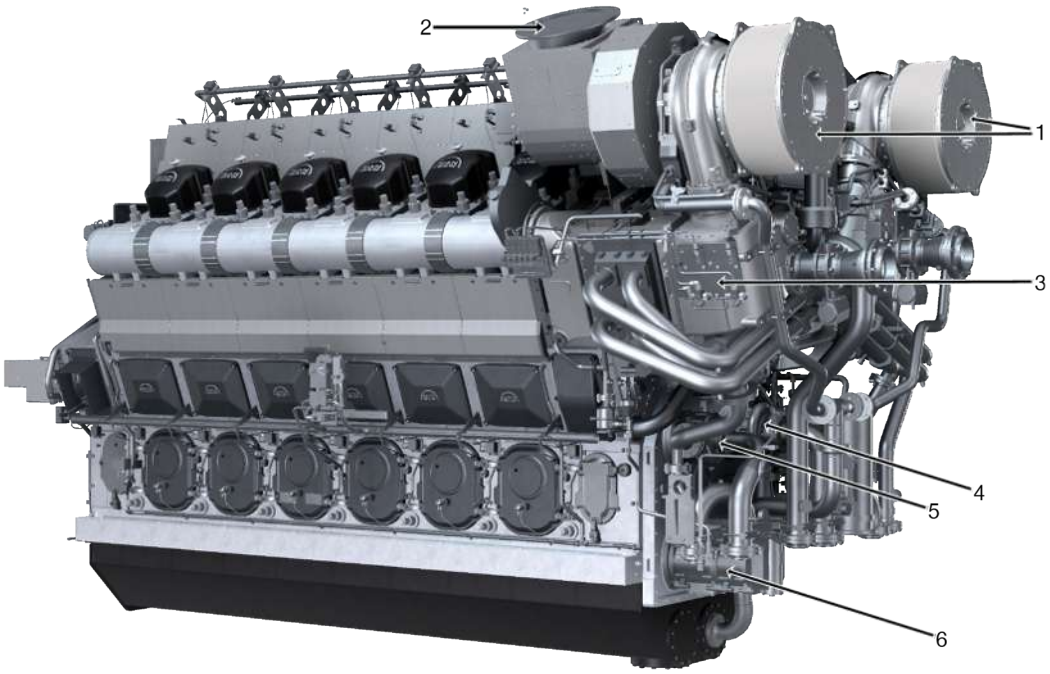

1 Silencer
2 Turbocharger exhaust outlet
3 Charge air cooler
4 LT cooling water pump
5 HT cooling water pump
6 Lube oil pump

Figure 5: Engine overview V engine, view on counter coupling side (CCS)

2025-06-16 - 1.0

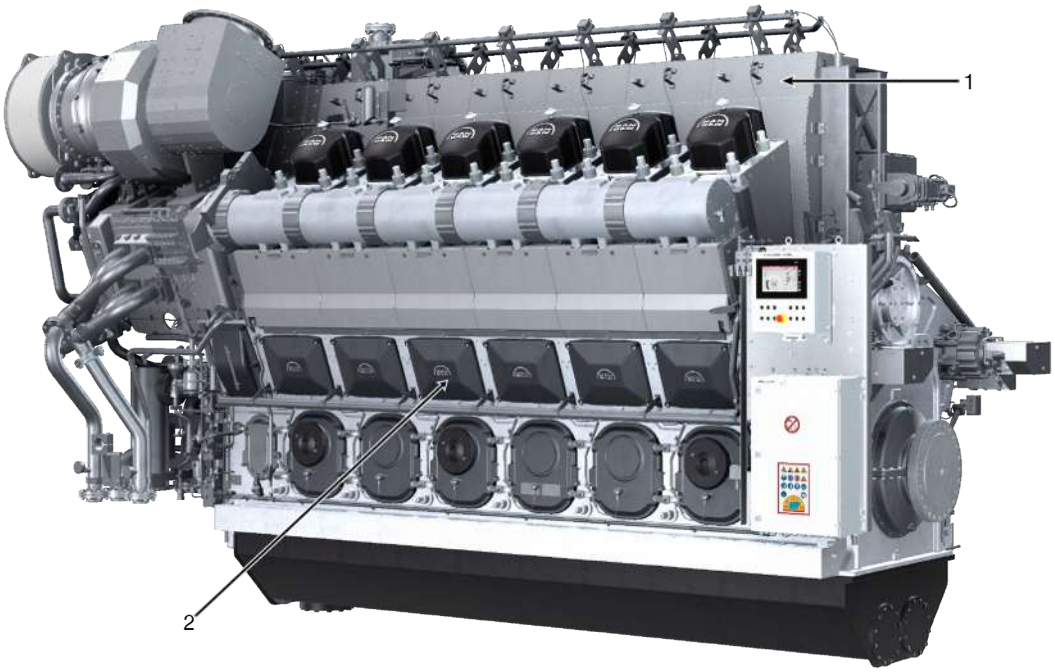

1 Exhaust heat shield
2 Camshaft cover

Figure 6: Engine overview V engine, view on coupling side (CS)

2025-06-16 - 1.0

1.4 Turbocharger overview

1.4.1 View of a TCF type turbocharger

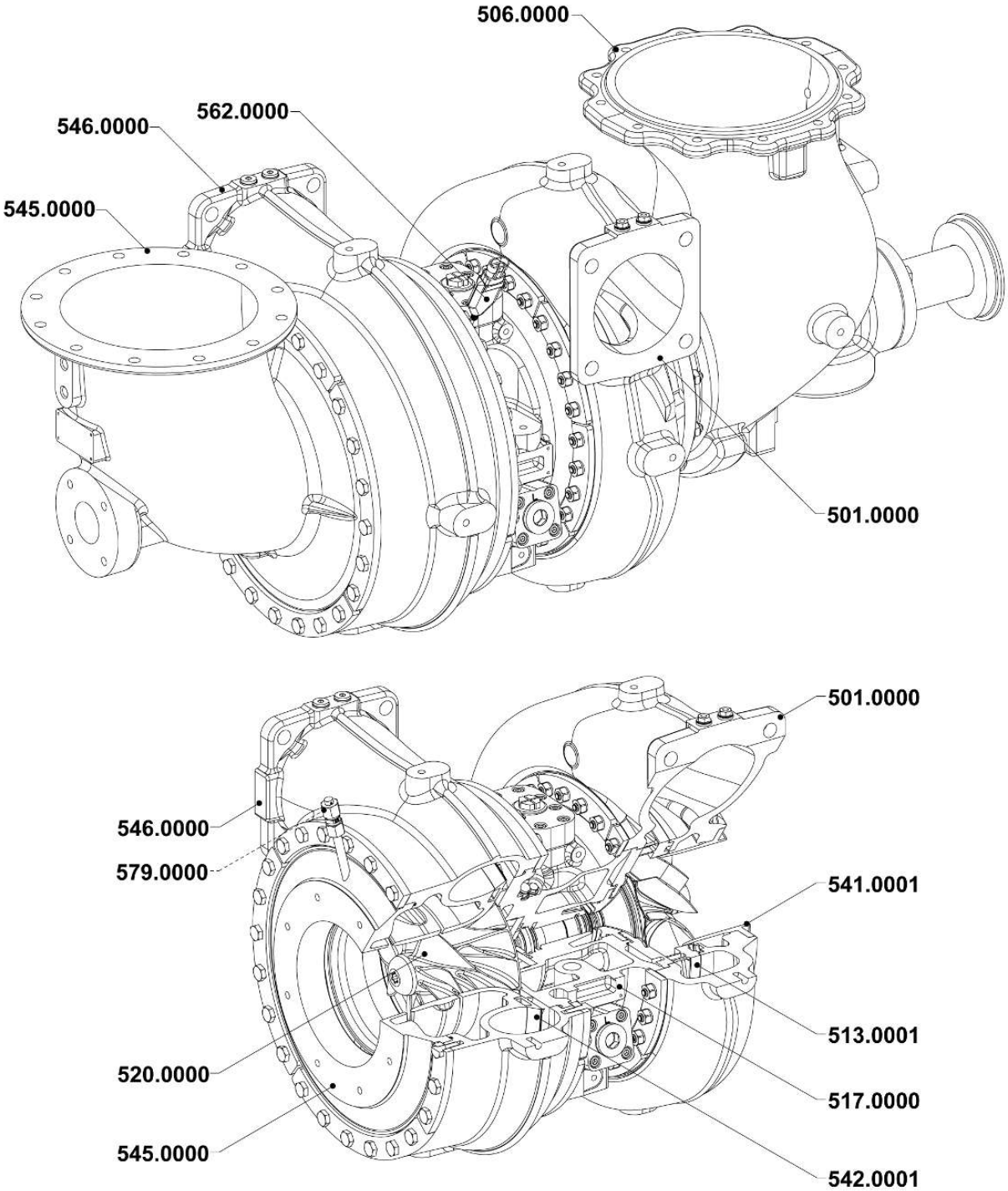

Figure 7: TCF type turbocharger

2025-06-16 - 1.0

Assembly	Designation	Option
500.0000	Turbocharger, complete	-
501.0000	Turbine inlet casing	-
506.0000	Turbine outlet elbow	X
513.0001	Turbine nozzle ring	-
517.0000	Bearing casing	-
520.0000	Rotor assembly	-
540.0001	Insert piece, compressor side	-
541.0001	Insert piece, turbine side	-
542.0001	Diffuser	-
544.0000	Silencer	X
545.0000	Suction piece (air intake)	X
546.0000	Compressor casing	-
562.0000	Speed measuring device[1)]	X
578.0000	Cleaning device for turbine, wet[1)]	X
578.0000	Cleaning device for turbine, dry[1)]	X
579.0000	Cleaning device for compressor[2)]	X
591.1000	Covering of turbine inlet casing	X
591.4000	Covering of turbine outlet elbow	X
591.6000	Sound insulation (textile covering)[1)]	X

[1)] Not shown in the figure.

[2)] Only the connecting pipe to the device is shown in the figure.

Table 1: Legend - TCF type turbocharger

1.4.2 Compensator between turbine outlet (engine) and exhaust gas pipe (plant)

All turbocharger casing flanges, with the exception of the turbine outlet, may only be subjected to loads generated by the gas forces, and not to additional external forces or torques.

This necessitates the use of compensators directly at the turbine outlet.

The compensators must be pre-loaded in such a manner that thermal expansion of the pipes and casings does not exert forces or torques in addition to those generated by the air and gas.

- Forces and torques according to API standard 617.
- Operating direction implemented according to MAN Energy Solutions standard.
- Minimising the load as far as possible.
- Characteristic values include gas forces, masses and compensator.

2025-06-16 - 1.0

1.4.3 No additional masses allowed

In general no masses are to be fixed to any part of the engine/turbocharger, as these have an impact to the general vibration behaviour of the engine.

Additional loads and changed vibration behaviour can endanger the operational safety of the engine.

Consequently, for any questions in this regard consult MAN Energy Solutions in advance.

2025-06-16 - 1.0

2 Engine and operation

2.1 Approved applications and destination/suitability of the engine

Approved applications

The 32/40CD TCF is designed as multi-purpose drive. It has been approved by type approval as marine main engine and auxiliary engine by all main classification societies (ABS, BV, CCS, ClassNK, CR, CRS, DNV, KR, LR, RINA).

As marine main engine[1] and auxiliary engine it may be applied for mechanical or electric propulsion[2] for applications as:

- Bulker, container vessel and general cargo vessel
- Ferry and cruise liner
- Tanker
- Fishing vessel
- Dredger and tugs – in line with project requirements regarding required high-torque performance engine will be adapted
- Others – to fulfill all customers needs the project requirements have to be defined at an early stage

For the applications named above the MAN L32/40 can be applied for single- and for multi-engine plants.

For single-engine plants a speed governor with mechanical backup is mandatory to fulfil the requirements of the classification societies.

For the applications named above the MAN V32/40 can be applied for multi-engine plants.

The 32/40CD TCF as marine auxiliary engine it may be applied for electric power generation[2] for auxiliary duties for applications as:

- Auxiliary GenSet[3]
- Emergency GenSet – all project requirements such as maximum inclination and required start-up time need to be clarified at an early project stage

Note:
The engine is not designed for operation in hazardous areas. It has to be ensured by the ship's own systems, that the atmosphere of the engine room is monitored and in case of detecting a -containing atmosphere the engine will be stopped immediately.

[1] In line with rules of classifications societies each engine whose driving force may be used for propulsion purpose is stated as main engine.

[2] See section Engine ratings (output) for different applications, Page 49.

[3] Not used for emergency case or fire fighting purposes.

Offshore

For offshore applications it may be applied as mechanical or electric propulsion[4] or as auxiliary engine for applications for:

- Platforms/offshore supply vessels
- Anchor handling tugs

2025-06-16 - 1.0

- General all kinds of service & supply vessels
- Drilling ships
- Semi subs
- FPSO (Floating Production Storage and Offloading Unit)

For the applications named above the MAN L32/40 can be applied for single- and for multi-engine plants. For the applications named above the MAN V32/40 can be applied for multi-engine plants.

Due to the wide range of possible requirements such as flag state regulations, fire fighting items, redundancy, inclinations and dynamic positioning modes all project requirements need to be clarified at an early stage.

On-board power generation for mobile or fixed offshore installations approved by ABS for MAN V32/40 according MODU rules.

Note:
The engine is not designed for operation in hazardous areas. It has to be ensured by the ship's own systems, that the atmosphere of the engine room is monitored and in case of detecting a -containing atmosphere the engine will be stopped immediately.

[4] See section Engine ratings (output) for different applications, Page 49.

Destination/suitability of the engine

Note:
Regardless of their technical capabilities, engines of our design and the respective vessels in which they are installed must at all times be operated in line with the legal requirements, as applicable, including such requirements that may apply in the respective geographical areas in which such engines are actually being operated.

Operation of the engine outside the specified operated range, not in line with the media specifications or under specific emergency situations (e.g. suppressed load reduction or engine stop by active "Override", triggered firefighting system, crash of the vessel, fire or water ingress inside engine room) is declared as not intended use of the engine (for details see engine specific operating manuals). If an operation of the engine occurs outside of the scope of supply of the intended use a thorough check of the engine and its components needs to be performed by supervision of the MAN Energy Solutions service department. These events, the checks and measures need to be documented.

Electric and electronic components attached to the engine – Required engine room temperature

In general our engine components meet the high requirements of the marine classification societies.

Relevant design criteria for the engine room air temperature:

Minimum air temperature in the area of the engine and its components ≥ 5°C.

Maximum air temperature in the area of the engine and its components ≤ 45°C.

The electronic components are suitable for proper operation within an air temperature range from 5°C to 55°C.

2025-06-16 - 1.0

For further information see also section Engine automation, Technical data, envirionmental conditions, Page 243.

Note:
Condensation of the air at engine components must be prevented.

Note:
It can be assumed that the air temperature in the area of the engine and attached components will be 5–10 K above the ambient air temperature outside the engine room. If the temperature range is not observed, this can affect or reduce the lifetime of electrical/electronic components at the engine or the functional capability of engine components. Air temperatures at the engine > 55°C are not permissible.

2.2 Certification IMO Tier III

The engine's certification for compliance with NO_x limits according to NO_x technical code will be done according scheme B, meaning engine plus SCR will be handled as separate parts. Certification has to be in line with IMO Resolution MEPC 198(62), adopted 15 July 2011.

Emission level engine: IMO Tier II

Emission level engine plus SCR catalyst: IMO Tier III

Certification of engine

Engine will be tested as specified in section Programme for Factory Acceptance Test (FAT), Page 479 according to relevant classification rules. It will also certified as member or parent engine according NO_x technical code for emission category IMO Tier II.

Certification of complete system (engine plus SCR system)

Certification of SCR catalyst and components will be done in accordance to MEPC 198(62) for a scaled, standardised SCR reactor and SCR components based on product features and following scaled parameters:

- Exhaust gas mass flow
- Exhaust gas composition (NO_x, O_2, CO_2, H_2O, SO_2)
- Exhaust gas temperature
- Catalyst modules (AV, SV or LV value)
- Reducing agent
- Desired NO_x conversion rate

The on-board confirmation test required for a scheme B certification will be done for the parent engine plus SCR system for a group according to IMO resolution MEPC 198(62).

2.3 SCR – Special notes

2.3.1 Principle of SCR technology

The selective catalytic reduction SCR uses ammonia (NH_3) to convert nitrogen oxides in the exhaust gas to harmless nitrogen and water within a catalyst. However, ammonia is a hazardous substance which has to be handled care-

2025-06-16 - 1.0

fully to avoid any dangers for crews, passengers and the environment. Therefore urea as a possible ammonia source is used. Urea is harmless and, solved in water, it is easy to transport and to handle. Today, aqueous urea solutions of 40% is the choice for SCR operation in mobile applications on land and at sea.

Using urea, the reaction within the exhaust gas pipe and the catalyst consists of two steps. In the beginning, the urea decomposes in the hot exhaust gas to ammonia and carbon dioxide using the available water in the injected solution and the heat of the exhaust gas:

$(NH_2)_2CO + H_2O \rightarrow 2NH_3 + CO_2$ [1]

The literal NO_x-reduction takes place supported by the catalyst, where ammonia reduces nitrogen oxides to nitrogen and water:

$4NO + 4NH_3 + O_2 \rightarrow 4N_2 + 6H_2O$ [2]

2.3.2 System overview

The MAN Energy Solutions SCR system is available in different sizes to cover the whole medium-speed engine portfolio. The SCR system consists of the reactor, the mixing unit, the urea supply system, the pump module, the dosing unit, the SCR cabinet and the soot-blowing system.

After initial start-up of the engine, the SCR system operates continuously in automatic mode. The amount of urea injection into the SCR system depends on the operating conditions of the engine. Since the SCR cabinet of the SCR system is connected to the engine control system all engine related information are continuously and currently available. This is one of the important benefits of the MAN Energy Solutions SCR system.
The urea is sprayed into the mixing unit which is part of the exhaust gas duct. Entering the reactor the reducing agent starts to react with NO_x coming from the combustion. The amount of reducing agent is controlled by the dosing unit, which is supported by a pump connected to an urea tank. It furthermore regulates the compressed air flow for the injector.

Each reactor is equipped with a soot blowing system to prevent blocking of the SCR catalyst by ashes and soot.

2.3.3 Scope of supply

- Engine in standard configuration according stated emission level (see above).
- Engine attached equipment for control of the temperature after turbine.
- Engine SaCoS software including functions for control of temperature after turbine and for optimising engine plus SCR performance.
- IMO Tier III Certificate.
- MAN Energy Solutions will act as "Applicant" within the meaning of the IMO.

Main components of SCR system in the standard scope of supply

- SCR reactor
- Catalyst modules
- Soot blowing system
- Dosing unit
- Mixing unit

2025-06-16 - 1.0

- Urea injection lance
- SCR cabinet
- Pump module
- Compressed air reservoir module

Not included in the standard scope of supply, among others

- Urea storage tank
- Urea storage tank minimum level switch
- Piping
- Insulation

2.3.4 Operation

Standard operation

Common SCR systems provided by third parties require constantly high exhaust gas temperatures. The MAN Energy Solutions SCR system on the other hand is an integrated engine plus SCR system, that allows operation on lower exhaust gas temperature levels.
The MAN Energy Solutions SCR system automatically adjusts the engine exhaust gas temperature to ensure both optimum engine plus SCR operation. For a maximum on safety the surveillance mode is always activated.

Enhanced operation

The MAN Energy Solutions SCR system assures ideal engine operation, regenerating the SCR system whenever necessary to account for minimum fuel oil consumption while complying with IMO Tier III emission limits at all times. The regeneration will be started automatically. One specific regeneration trigger is the back pressure increase of the catalysts. It varies depending on operation, fuel oil, engine type, ambient conditions etc. Especially long-term low-load operation might cause a significant back pressure increase.

See section Low-load operation, Page 68.

2.3.5 Boundary conditions for SCR operation

Consider following boundary conditions for the SCR operation:

- Temperature control of temperature turbine outlet:
  - By adjustable waste gate (attached to engine) or for individual engine types by VTA.
  - Set point 320°C as minimum temperature for active SCR.
  - Set point 290°C as minimum temperature for deactivated SCR.
- Fuel:
  - In line with MAN Energy Solutions specification, maximum 3.5% sulphur content.
- SCR active in following range:
  - −10°C (arctic) up to 45°C (tropic) intake air temperature.
  - In the range of 25% to 100% engine load.
- IMO requirements for handling of SCR operation disturbances:

2025-06-16 - 1.0

  - In case of SCR malfunction IMO regulations allow that the system will be turned off and the ship's journey will be continued to the port of destination. There, the ship must be repaired, if the emission limits of the harbor/sea area would be exceeded.
- Differential pressure Δp SCR (normal operation):
  - Max. 20 mbar for the MAN SCR-LPC.
  - Max. 37 mbar for the MAN SCR-LPS.

For the design of the complete exhaust gas line, consider:

- Maximum permissible exhaust gas back pressure (to be calculated from engine turbocharger outlet to end of complete exhaust gas line):
  - Max. 50 mbar (at 100% engine load).
- Maximum permissible temperature drop of exhaust gas line (to be calculated as difference of exhaust gas temperature turbine outlet and temperature SCR inlet):
  - Max. 5 K in the range of 25% to 100% engine load (calculated at 5°C air temperature in the engine room).
- Recommended for exhaust gas line:
  - Insulation according to SOLAS standard.

Note:
The SCR system requires high exhaust gas temperatures for an effective operation. MAN Energy Solutions therefore recommends to arrange the SCR as the first device in the exhaust gas line, followed by other auxiliaries like boiler, silencer etc.

For the design of the ship automation, consider:

- In order to ensure reliable regeneration of the SCR, it is necessary in some applications to bring individual engines or engine groups into a load range suitable for regeneration. This must be considered in the design phase of the load distribution control. In the case of single-engine plants and exceptional case, a temporary adjustment of the cruise profile may be necessary.

  Contact MAN Energy Solutions for further details.

2.3.6 Performance coverage for SCR system

- Performance guarantee for engine plus SCR within defined in section Boundary conditions for SCR operation, Page 29.
- Guarantee for engine plus SCR for marine applications to meet IMO Tier III level as defined by IMO within defined in section Boundary conditions for SCR operation, Page 29 (details will be handled within the relevant contracts).

Be aware:
All statements in this document refer to MAN Energy Solutions SCR systems only.

MAN Energy Solutions can only deliver an IMO Tier III certificate and act as “Applicant” (within the meaning of the IMO) if the engine plus SCR system is supplied by MAN Energy Solutions.

2025-06-16 - 1.0

If the engine is supplied without MAN Energy Solutions SCR system, only a standard warranty for a single engine will be given. No guarantee regarding minimum exhaust gas temperature after turbine or emissions after third-party SCR or suitability of the engine in conjunction with a third-party SCR system can be given.

If the engine is supplied without MAN Energy Solutions SCR system, no optimisation function within SaCoS can be applied and as maximum exhaust gas temperature after turbine only will be possible:

- 320°C (25% load – 100% load).

2025-06-16 - 1.0

2.4 Engine design

2.4.1 Engine cross section

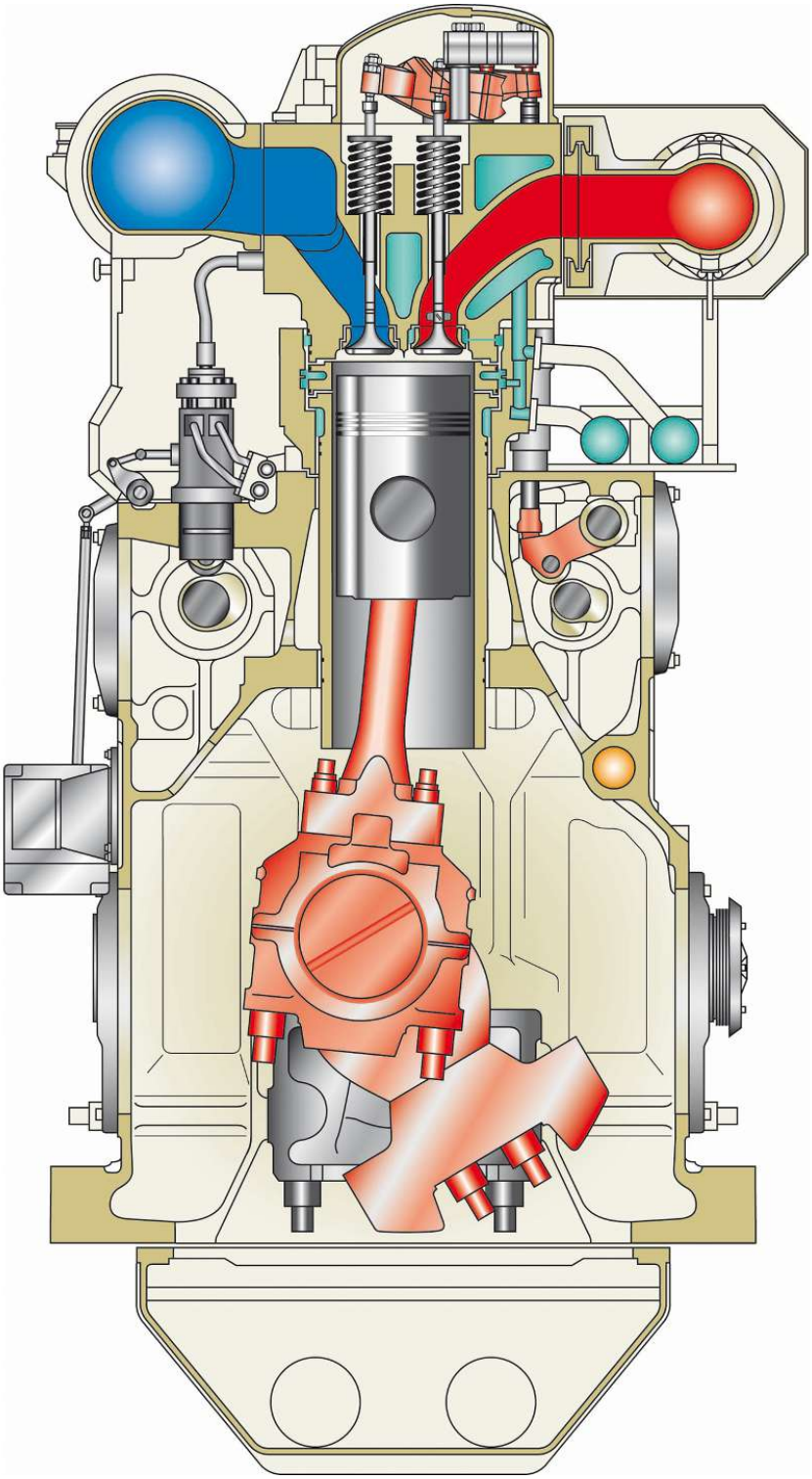

Figure 8: Cross section, view on coupling side – L engine

2025-06-16 - 1.0

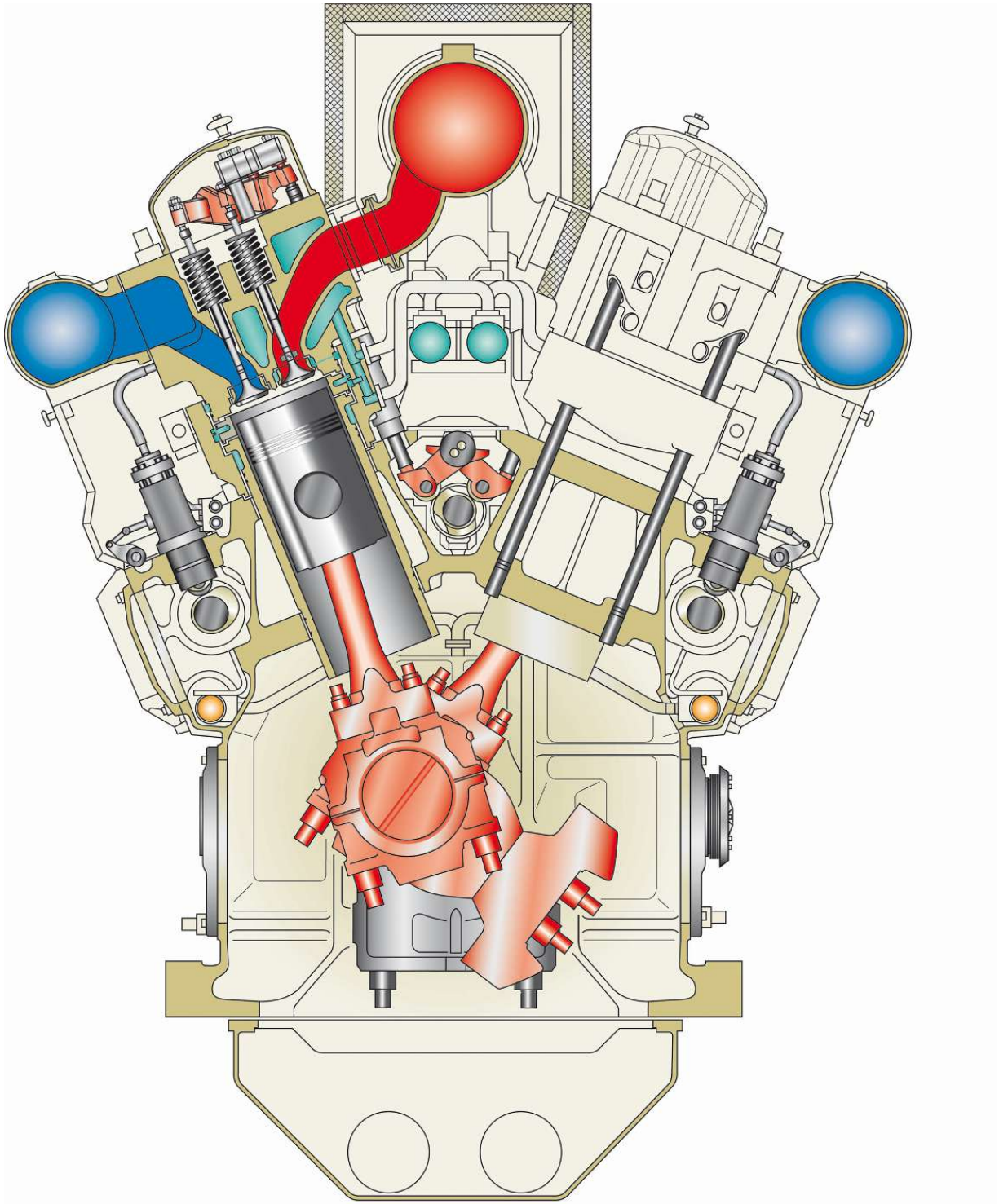

Figure 9: Cross section, view on coupling side – V engine

2025-06-16 - 1.0

2.4.2 Engine designations – Design parameters

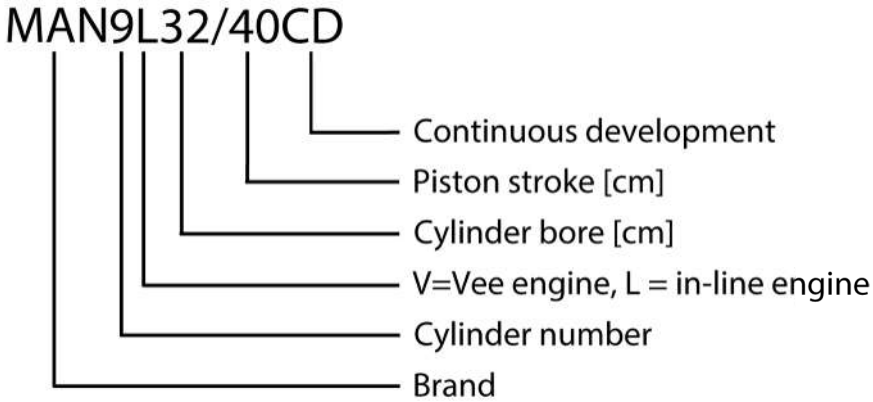

Figure 10: Example to declare engine designations

Parameter	Value	Unit
Number of cylinders	6, 7, 8, 9, 12, 14, 16, 18	-
Cylinder bore	320	mm
Piston stroke	400	
Displacement per cylinder	32.17	litre
Distance between cylinder centres, in-line engine	530	mm
Distance between cylinder centres, vee engine	630	
Vee engine, vee angle	45	°
Crankshaft diameter at journal, in-line engine	290	mm
Crankshaft diameter at journal, vee engine	320	
Crankshaft diameter at crank pin, vee engine	290	

Table 2: Design parameters

2025-06-16 - 1.0

2.4.3 Turbocharger assignments

No. of cylinders, config.	CPP/GenSet/electric propulsion	FPP/dredger
	500 kW/cyl., 720/750 rpm	450 kW/cyl., 750 rpm
6L	TCF20	TCF20
7L		
8L		
9L		
12V	2 x TCF20	2 x TCF20
14V		
16V		
18V		

Table 3: Turbocharger assignments

Turbocharger assignments mentioned above are for guidance only and may vary due to project-specific reasons. Consider the relevant turbocharger Project Guides for additional information.

2025-06-16 - 1.0

2.4.4 Engine main dimensions, weights and views – Electric propulsion, auxiliary GenSet

L engine – Electric propulsion, auxiliary GenSet

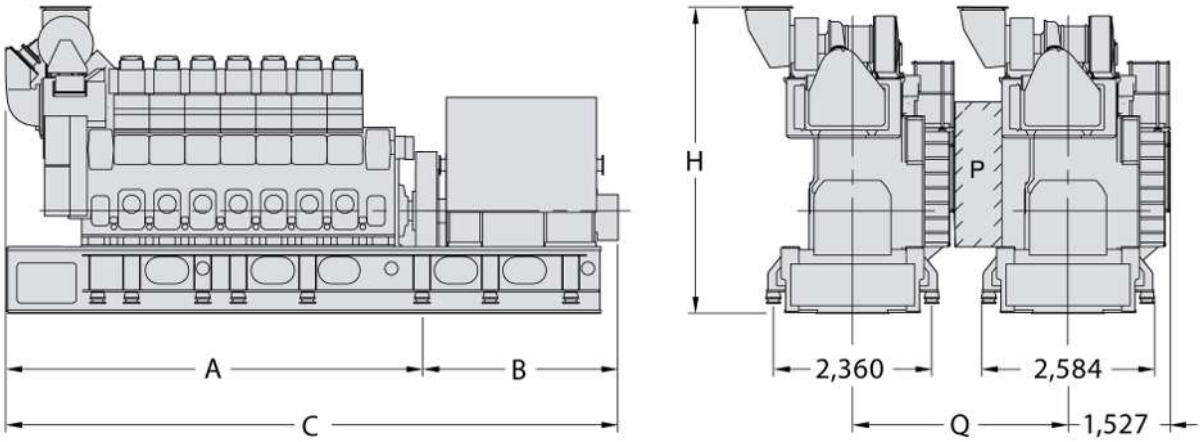

Figure 11: Main dimensions and weights – L engine - Electric propulsion, auxiliary GenSet

No. of cylinders, config.	Length C[1)]	Length A	Length B[1)]	Height H	Weight[1)]
	mm				tons
6L	9,755	6,340	3,415	4,622	71.0
7L	10,285	6,870			75.0
8L	11,035	7,400	3,635		81.5
9L	11,565	7,930			85.5

[1)] Depending on alternator applied.

Dimensions and weight specifications apply to GenSet (also known as Holeby-GenSet design) and are for guidance only (weight given without media filling of engine).

P: Free passage between the engines, width 600 mm and height 2,000 mm.

Q: ~ min. distance between centre of engines: 2,835 mm (without gallery), ~ 3,220 mm (with gallery).

2025-06-16 - 1.0

V engine – Electric propulsion, auxiliary GenSet

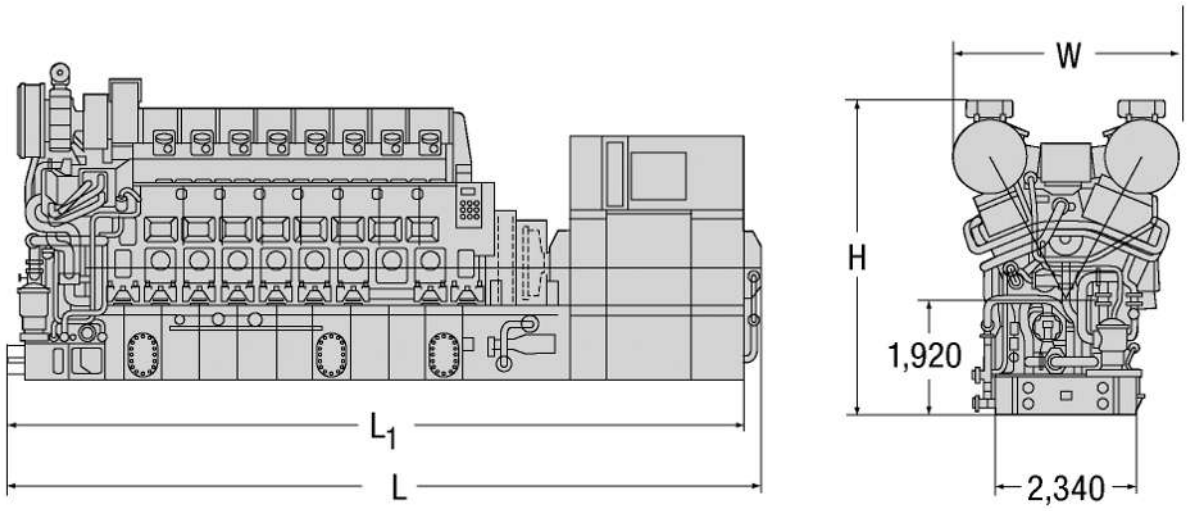

Figure 12: Main dimensions and weights – V engine - Electric propulsion, auxiliary GenSet

No. of cylinders, config.	Length L[1)]	Length L_1[1)]	Width W	Height H	Weight[1)]
	mm				tons
12V	11,045	10,450	3,255	4,391	102
14V	11,710	11,115			114
16V	12,555	11,950			125
18V	13,185	12,580			137

[1)] Depending on alternator applied.

Dimensions and weight specifications apply to GenSet (also known as Augsburg-GenSet design) and are for guidance only (weight given without media filling of engine).

Flywheel data, see section Moments of inertia – Crankshaft, damper, flywheel, Page 181.

2025-06-16 - 1.0

2.4.5 Engine main dimensions, weights and views – Mechanical propulsion

L engine – Mechanical propulsion

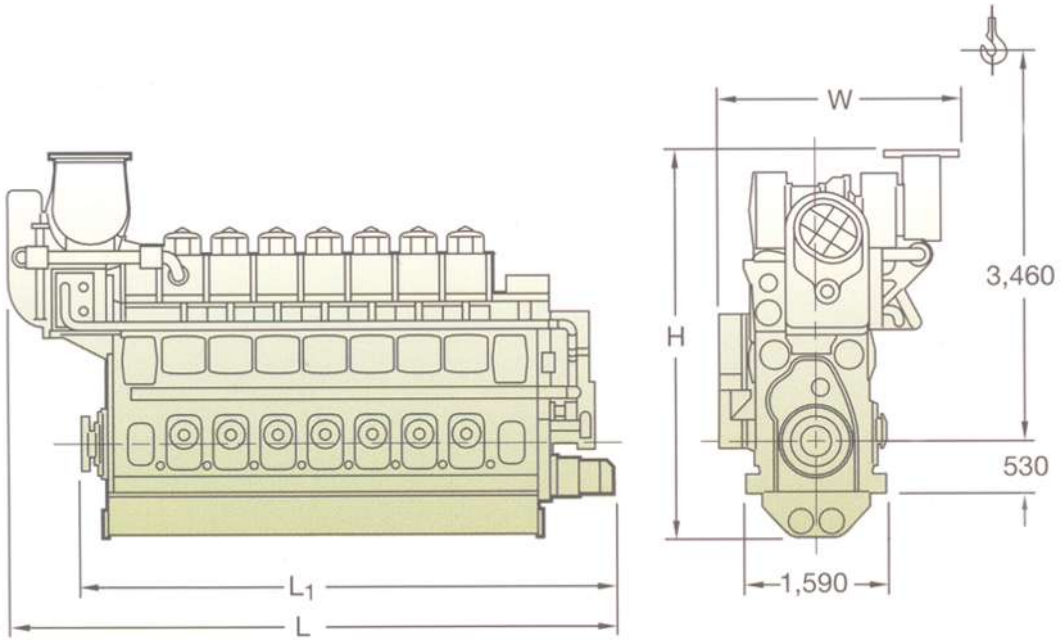

Figure 13: Main dimensions and weights – L engine

No. of cylinders, config.	Length L	Length L_1	Width W	Height H	Weight without flywheel
	mm				tons
6L	5,940	5,140	2,630	4,010	38.5
7L	6,470	5,670			42.5
8L	7,000	6,195			47
9L	7,530	6,725			51
The dimensions and weights are given for guidance only (weight given without media filling of engine).					

Minimum centreline distance for multi-engine installation, see section Installation drawings.

Flywheel data, see section Moments of inertia – Crankshaft, damper, flywheel, Page 181.

2025-06-16 - 1.0

V engine – Mechanical propulsion

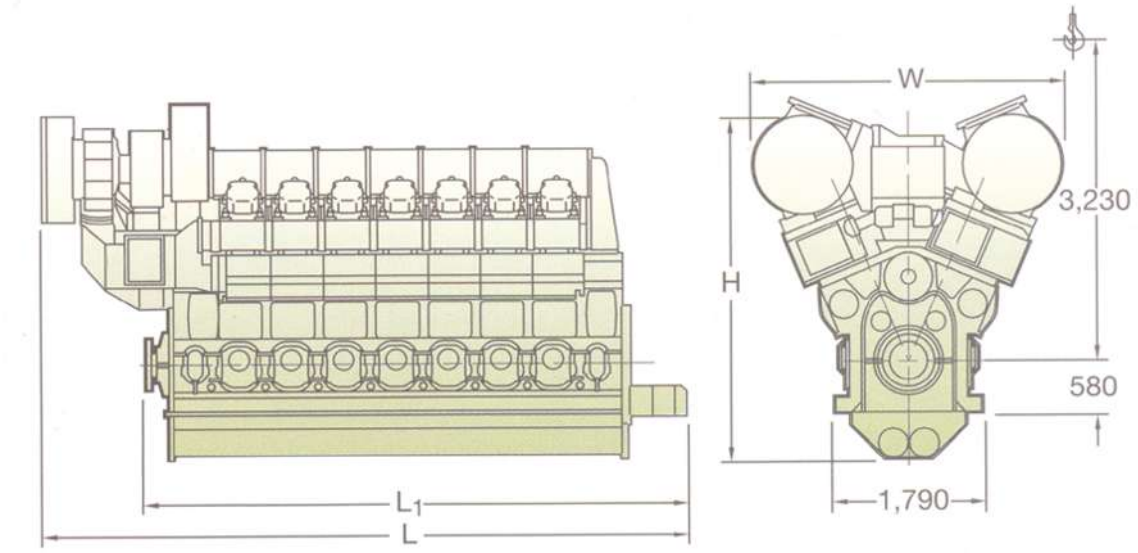

Figure 14: Main dimensions and weights – V engine

No. of cylinders, config.	Length L	Length L_1	Width W	Height H	Weight without flywheel
	mm				tons
12V	6,974	5,890	3,255	4,181	62
14V	7,604	6,520			69
16V	8,228	7,150			76
18V	8,858	7,780			84
The dimensions and weights are given for guidance only (weight given without media filling of engine).					

Minimum centreline distance for multi-engine installation, see section Installation drawings.

Flywheel data, see section Moments of inertia – Crankshaft, damper, flywheel, Page 181.

2.4.6 Main dimensions, weights and views of SCR components

Depending on the individual projects SCR properties may vary. The following dimensions and weights are for guidance only.

For the SCR reactor two designs are available, SCR reactor LPC and SCR reactor LPS. LPC is the standard reactor with a compact design. LPS is a specialised reactor with smallest footprint.

2025-06-16 - 1.0

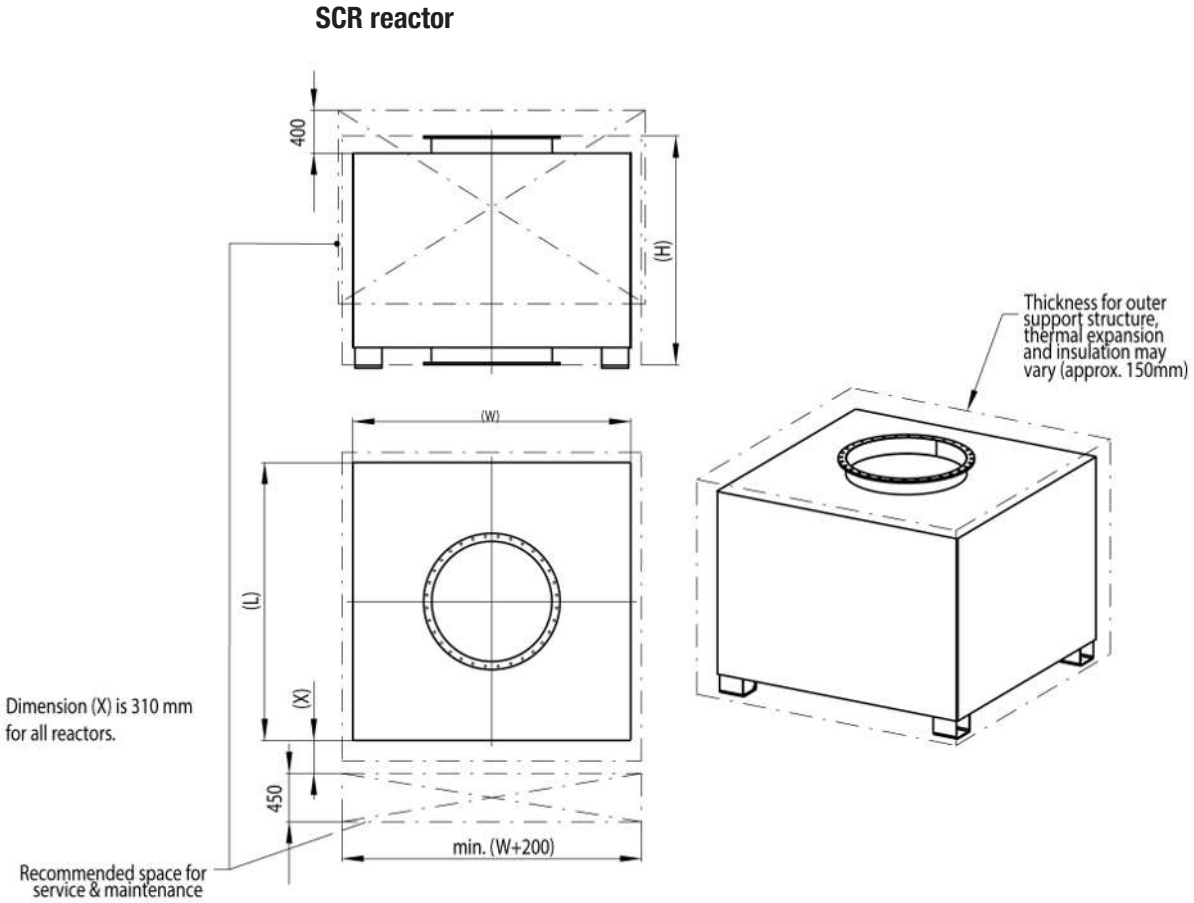

Figure 15: SCR reactor

SCR reactor - LPC	Engine power approximately	Duct	H (total length)	W (without insulation)	L (without insulation)	Handling weight	Operational weight
No.	[kW]	DN	[mm]	[mm]	[mm]	[kg]	[kg]
1	0–1,400	500	1,892	1,252	1,252	1,020	1,484
2	1,401–2,400	600	1,938	1,502	1,502	1,190	1,886
3	2,401–3,600	800	1,985	1,752	1,752	1,530	2,574
4	3,601–4,900	900	2,032	2,084	2,084	1,900	3,321
5	4,901–6,000	1,000	2,079	2,334	2,334	2,460	4,316
6	6,001–7,800	1,100	2,126	2,584	2,584	2,680	5,029
7	7,801–9,000	1,200	2,228	2,916	2,916	3,310	6,210
8	9,001–12,000	1,400	2,330	3,248	3,248	4,035	7,544
9	12,001–13,700	1,500	2,432	3,416	3,416	4,255	8,431
10	13,701–15,000	1,600	2,534	3,748	3,748	4,780	9,681
11	15,001–17,000	1,700	2,635	3,990	3,990	5,410	11,094
12	17,001–20,000	1,800	2,737	4,248	4,248	6,040	12,565
13	20,001–21,600	2,000	2,839	4,580	4,580	6,985	14,409

Table 4: SCR reactor - LPC

2025-06-16 - 1.0

SCR reactor - LPS	Engine power approximately	Duct	H (total length)	W (without insulation)	L (without insulation)	Handling weight	Operational weight
No.	[kW]	DN	[mm]	[mm]	[mm]	[kg]	[kg]
1	0–2,400	500	3,072	1,252	1,252	1,500	2,428
2	2,401–3,600	600	3,118	1,502	1,502	1,800	3,192
3	3,601–4,900	800	3,165	1,752	1,752	2,200	4,228
4	4,901–6,000	900	3,212	2,084	2,084	2,800	5,642
5	6,001–9,000	1,000	3,259	2,334	2,334	3,790	7,502
6	9,001–12,000	1,100	3,306	2,584	2,584	4,410	9,108
7	12,001–13,700	1,200	3,408	2,916	2,916	5,300	11,100
8	13,701–15,000	1,400	3,510	3,248	3,248	6,200	13,218
9	15,001–20,000	1,500	3,612	3,416	3,416	6,930	15,282
10	20,001–21,600	1,600	3,714	3,748	3,748	7,980	17,782

Table 5: SCR reactor - LPS

Note:
In accordance with applicable security policies there must be provided adequate maintenance space, which permits the safe execution of all necessary maintenance work.

Mixing unit with urea injection lance

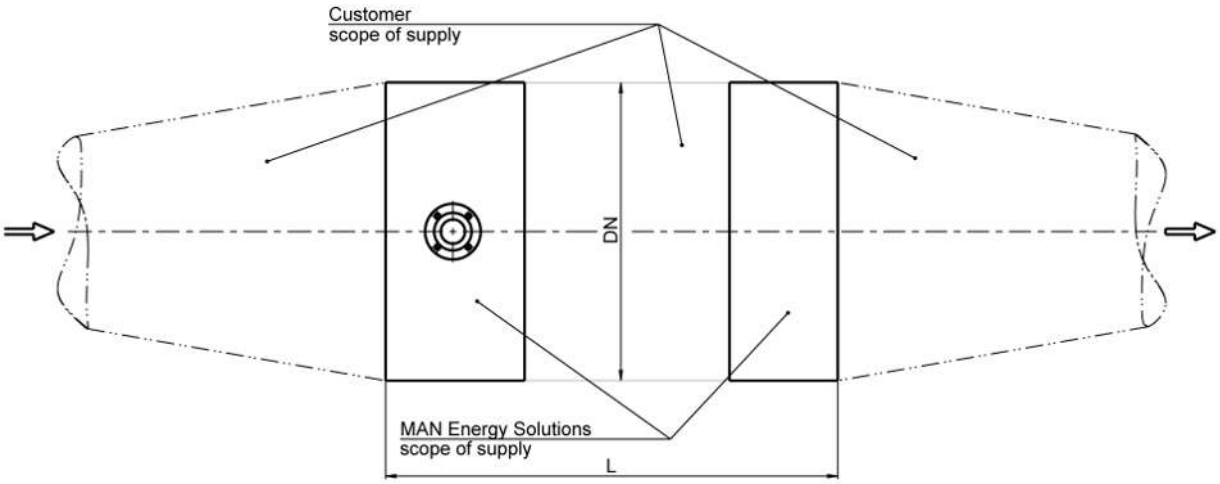

Figure 16: Mixing unit with urea injection lance

Mixing unit	Engine power approximately	Mixing pipe[1)]	Length straight mixing pipe (L)
No.	[kW]	DN	[mm]
1	0–1,000	500	2,580
2	1,001–2,000	600	2,630
3	2,001–3,000	800	2,735
4	3,001–4,200	1,000	2,845
5	4,201–5,400	1,100	3,300

2025-06-16 - 1.0

Mixing unit	Engine power approximately	Mixing pipe[1)]	Length straight mixing pipe (L)
No.	[kW]	DN	[mm]
6	5,401–6,800	1,200	3,350
7	6,801–8,500	1,400	3,455
8	8,501–10,500	1,500	3,360
9	10,501–13,000	1,600	3,405
10	13,001–20,000	2,100	3,660
11	20,001–21,600	2,300	3,760

[1)] Diameter mixing pipe differs from exhaust pipe diameter.

Table 6: Mixing unit with urea injection lance

Dosing unit

Dosing unit	Height	Width	Depth	Weight
No.	[mm]	[mm]	[mm]	[kg]
1	800	800	300	80

Table 7: Dosing unit

SCR cabinet

SCR cabinet	Height	Width	Depth	Weight
No.	[mm]	[mm]	[mm]	[kg]
1	800	400	300	30

Table 8: SCR cabinet

Pump module

Pump module	Height	Width	Depth	Weight
No.	[mm]	[mm]	[mm]	[kg]
1	1,800	1,000	400	210

Table 9: Pump module

Compressed air reservoir module

Air module	Height	Width	Depth	Weight
No.	[mm]	[mm]	[mm]	[kg]
1	1,730	810	620	195

Table 10: Compressed air reservoir module

2025-06-16 - 1.0

2.4.7 Engine inclination

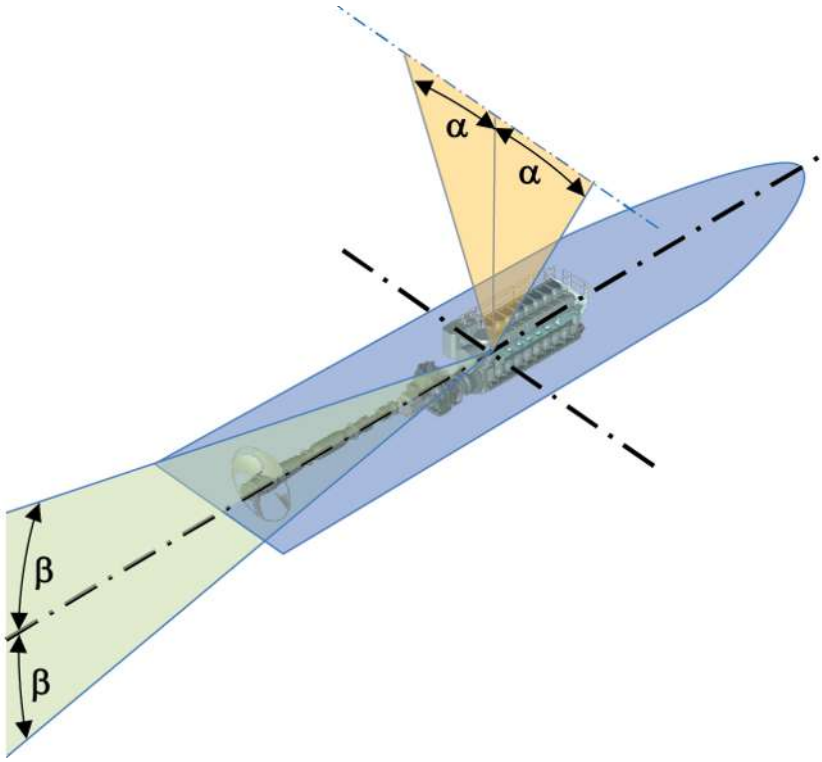

α Athwartships β Fore and aft

Figure 17: Angle of inclination

Max. permissible angle of inclination [°][1]					
Application	**Athwartships α**		**Fore and aft β**		
	Heel to each side (static)	**Rolling to each side (dynamic)**	**Trim (static)[2]**		**Pitching (dynamic)**
			L < 100 m	**L > 100 m**	
Main engines	15	22.5	5	500/L	7.5

[1] Athwartships and fore and aft inclinations may occur simultaneously.

[2] Depending on length L of the ship.

Table 11: Inclinations

Note:
For higher requirements contact MAN Energy Solutions. Arrange engines always lengthwise of the ship.

2025-06-16 - 1.0

2.4.8 Engine equipment for various applications

Device/measure, (figure pos.)	Ship		
	Mechanical propulsion	Electric propulsion	Auxiliary engines
Cylinder pressure limitation by hot charge air blow off (variable)	Order related, required if intake air < 0°C[1]		
Charge air pressure control by waste gate (variable)	X	X	X
Cold charge air by-pass (binary)	X	–	–
Temperature after turbine control by waste gates (variable)	X	X	X
SCR system	X	X	X
Turbocharger – Compressor cleaning device (wet)	X	X	X
Turbocharger – Turbine cleaning device (dry)	X	X	X
Turbocharger – Turbine cleaning device (wet)	X	X	X
Two-stage charge air cooler	X	X	X
CHATCO (charge air temperature control)	X	X	X
Jet assist	O/X[2]	X	X
Slow Turn	O/X[3]	O/X[3]	O/X[3]
Oil mist detector	X	X	X
Splash oil monitoring	X[4]	X[4]	X[4]
Main bearing temperature monitoring	X[4]	X[4]	X[4]
Sealed plunger pumps	X	X	X
Starting system – Starting air valves within cylinder head	X	X	X
Attached HT cooling water pump	X	X	X
Attached LT cooling water pump	O	O	O
Attached lubrication oil pump	X	X	X

X = required, O = optional, – = not required

[1] MAN Energy Solutions recommends an engine room temperature of +5°C to avoid freezing wetness on intake air silencer filter mat and electronic equipment.

[2] Jet assist required, if a shaft generator with an output higher than 25% of the nominal engine output is attached to the gear/engine.

[3] Slow turn is always required for plants with power management system (PMS) demanding automatic engine start.

[4] On special request, this equipment might be omitted.

Table 12: Engine equipment

Engine equipment for various applications – General description

Cylinder pressure limitation by hot charge air blow-off (variable) (see figure Overview flaps, Page 45)

If engines are operated at full load at low air intake temperature, the high air density leads to the danger of excessive charge air pressure and, consequently, to excessive cylinder pressure. In order to avoid such conditions, part of the charge air is withdrawn upstream of the charge air cooler and blown-off. (Hot charge air blow-off).

2025-06-16 - 1.0

Note:
Hot air withdrawn before charge air cooler has to be blown outside the engine room where it can not harm persons and property or may be used e.g. for intake air preheating.

Charge air pressure control by waste gate (variable)

A continuously adjustable waste gate is used to control the charge air pressure.

Cold charge air by-pass (binary) (see figure Overview flaps, Page 45)

A part of the hot charge air after compressor will be withdrawn into the exhaust gas pipe. The flap is closed in normal operation. In some areas of the operating map of the engine, this charge air by-pass will be opened and the increased air flow at the turbine results in a higher charge air pressure of the compressor, which leads to an improved operational behaviour of the engine. In addition, this flap may be used to avoid surging of the turbocharger.

Temperature after turbine control by waste gates (variable) (see figure Overview flaps, Page 45)

The waste gate is used to by-pass the turbine of the turbocharger with a part of the exhaust gas. This leads to a charge air pressure reduction and the temperature after turbine is increased.

For plants with an SCR catalyst, downstream of the turbine, a minimum exhaust gas temperature upstream the SCR catalyst is necessary in order to ensure its proper performance.

In case the temperature downstream the turbine falls below the set minimum exhaust gas temperature value, the waste gate is opened gradually in order to blow-off exhaust gas upstream of the turbine until the exhaust gas temperature downstream of the turbine (and thus upstream of the SCR catalyst) has reached the required level.

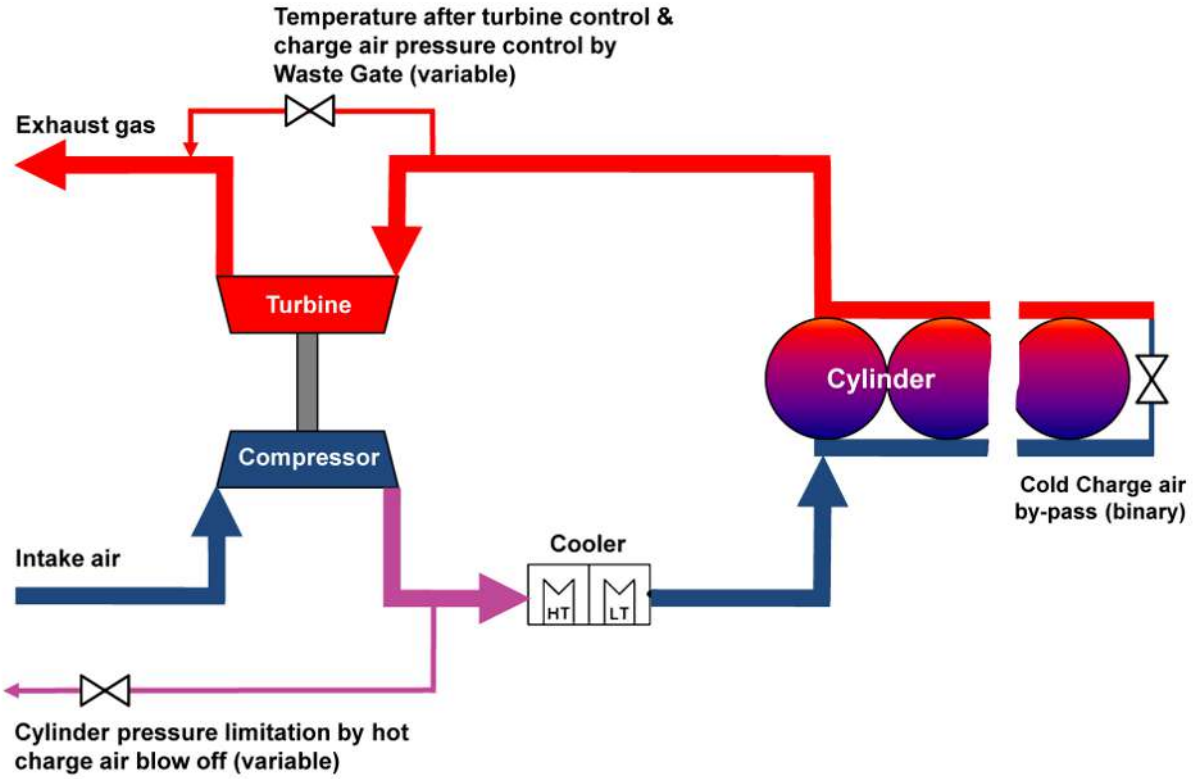

Figure 18: Overview flaps

2025-06-16 - 1.0

SCR system	The SCR system uses a reduction agent to transform the pollutant NO_x into environmentally friendly nitrogen and water vapour. The MAN Energy Solutions SCR system is capable of complying with the IMO Tier III limits over the entire range of applications.
Turbocharger – Compressor cleaning device (wet)	Depending on the quality of the intake air, deposits may be formed on the blades of the compressor wheel and diffuser. This contamination reduces the efficiency of the compressor. Cleaning of the compressor is carried out with water during operation at full load with a special compressor cleaning device.
Turbocharger – Turbine cleaning device (dry)	The turbochargers of engines operated with residual fuel (HFO), DMB (Marine Diesel Oil), DMA (Marine Gas Oil) must be cleaned prior to initial operation and at regular intervals to remove combustion residue from the blades of the turbine rotor and nozzle ring. Dry cleaning of the turbine should also be applied, in case of operation with inferior gas quality. Dry cleaning of the turbine is particularly suitable for cleaning the turbine rotor (turbine blades). Therefore, a special cleaning device to be used.
Turbocharger – Turbine cleaning device (wet)	The turbochargers of engines operated with residual fuel (HFO), DMB (Marine Diesel Oil), DMA (Marine Gas Oil) must be cleaned prior to initial operation and at regular intervals to remove combustion residue from the blades of the turbine rotor and nozzle ring. Wet cleaning of the turbine is particularly suitable for cleaning the nozzle ring. Wet cleaning is carried out during operation at greatly reduced engine load in order to avoid overstressing the turbine materials (thermal shock). Therefore, a special cleaning device to be used.
Two-stage charge air cooler	The two-stage charge air cooler consists of two stages which differ in the temperature level of the connected water circuits. The charge air is first cooled by the HT circuit (high temperature stage of the charge air cooler, engine) and then further cooled down by the LT circuit (low temperature stage of the charge air cooler, lube oil cooler).
CHATCO	The charge air temperature control CHATCO serves to prevent accumulation of condensed water in the charge air pipe. In this connection, the charge air temperature is, depending on the intake air temperature, controlled in such a way that, assuming a constant relative air humidity of 80%, the temperature in the charge air pipe does not fall below the condensation temperature.
Jet assist	Jet assist is used to improve the dynamic behavior of the engine to load steps and ramps. By means of nozzles in the turbocharger, compressed air is directed onto the compressor wheel to accelerate it. This results in a quicker adaption of the turbocharger to the new load condition. Jet assist is generally working with a compressed air pressure between 18 bar and 30 bar at the engine connection. However, it works most efficiently with a pressure of 27 bar. Therefore, the pressure difference from the compressed air tanks to the engine connections should, in any case, not be higher than 3 bar. Jet assist activating time: 3 seconds to 10 seconds (5 seconds on average).
Slow turn	Engines, which are equipped with slow turn, are automatically turned prior to engine start with the turning process being monitored by the engine control. If the engine does not reach the expected number of crankshaft revolutions (2.5 revolutions) within a specified period of time, or in case the slow turn time is shorter than the programmed minimum slow turn time, an error message is issued. This error message serves as an indication that there is liquid (oil, water, fuel) in the combustion chamber. If the slow turn manoeuvre is completed successfully, the engine is started automatically.

2025-06-16 - 1.0

	Slow turn is always required for plants with power management system (PMS) demanding automatic engine start.
Oil mist detector	Bearing damage, piston seizure and blow-by in combustion chamber leads to increased oil mist formation. As a part of the safety system the oil mist detector monitors the oil mist concentration in crankcase to indicate these failures at an early stage.
Splash oil monitoring	The splash oil monitoring system is a constituent part of the safety system. Sensors are used to monitor the temperature of each individual drive unit (or pair of drive at V engines) indirectly via splash oil.
Main bearing temperature monitoring	As an important part of the safety system the temperatures of the crankshaft main bearings are measured just underneath the bearing shells in the bearing caps. This is carried out using oil-tight resistance temperature sensors.
Sealed plunger injection pumps (SP injection pumps)	These conventional injection pumps have been designed for an operation with all specified fuels and especially for a complete separation of the fuel and the lube oil circuits within the injection pumps. And as fuel and lube oil are completely separated and cannot get in contact with each other, accordingly the leakage fuel of the SP injection pumps can be completely reused again. For the same reason, there is no need for sealing oil anymore in the case of continuous MGO-operation.
Starting system – Starting air valves within cylinder head	The engine is equipped with starting air valves within some of the cylinder heads. On starting command, compressed air will be led in a special sequence into the cylinder and will push down the piston and turn thereby the crankshaft untill a defined speed is reached.

2025-06-16 - 1.0

2.5 Ratings (output) and speeds

2.5.1 General remark

The engine power which is stated on the type plate derives from the following sections and corresponds to $P_{Operating}$ as described in section Derating, definition of P Operating, Page 50.

2.5.2 Standard engine ratings

$P_{ISO, standard}$: ISO standard output (as specified in DIN ISO 3046-1)

500 kW/cyl., 720/750 rpm

No. of cylinders, config.	Engine rating, $P_{ISO, standard}$ [1) 2)]			
	720 rpm[3)]		750 rpm	
	Available turning direction CW/CCW[4)]	kW	Available turning direction CW/CCW[4)]	kW
6L	Yes/Yes	3,000	Yes/Yes	3,000
7L	Yes/Yes	3,500	Yes/Yes	3,500
8L	Yes/Yes	4,000	Yes/Yes	4,000
9L	Yes/Yes	4,500	Yes/Yes	4,500
12V	Yes/Yes	6,000	Yes/Yes	6,000
14V	Yes/Yes	7,000	Yes/Yes	7,000
16V	Yes/Yes	8,000	Yes/Yes	8,000
18V	Yes/Yes	9,000	Yes/Yes	9,000

Note:
Power take-off on engine free end up to 100% of rated output.

[1)] $P_{ISO, standard}$ as specified in DIN ISO 3046-1, see paragraph Reference conditions for engine rating, Page 48.

[2)] Engine fuel: Distillate according to ISO 8217 or RM-grade fuel, fulfilling the stated quality requirements. Contents of FAME or synthetic fuels are not considered for this reference, as they affect the volumetric heat value.

[3)] Speed 720 rpm available for alternator drive only.

[4)] CW = clockwise; CCW = counter clockwise.

Table 13: Engine ratings

Reference conditions for engine rating

According to ISO 15550; ISO 3046-1

Air temperature before turbocharger t_r	K/°C	298/25
Total atmospheric pressure p_r	kPa	100
Relative humidity Φ_r	%	30
Cooling water temperature inlet charge air cooler (LT stage)	K/°C	298/25

Table 14: Reference conditions for engine rating

2025-06-16 - 1.0

2.5.3 Engine ratings (output) for different applications

$P_{Application, ISO}$: Available output under ISO conditions dependent on application

	$P_{Application}$ Available output in percentage from ISO standard output	$P_{Application}$ Available output	Max. fuel admission (blocking)	Max. permissible speed reduction at max. torque[1]	Tropic conditions (tr/tcr/pr= 100 kPa)[2]	Notes	Optional power take-off in percentage of ISO standard output
Kind of application	**%**	**kW/cyl.**	**%**	**%**	**°C**		**%**
Electricity generation							
Auxiliary engines in ships	100	500	110	-	45/38	3)	-
Marine main engines with mechanical or electric propulsion							
Mechanical propulsion with FPP[4]	90	450	100	10	45/38	5) 6)	-
Mechanical propulsion with CPP[4]	100	500	100	-	45/38	-	
Main drive with electric propulsion	100	500	110	-	45/38	3)	
Suction dredger/pumps (mechanical drive)							
Main drive with speed reduction at maximum torque[4]	90	450	100	20	45/38	5) 6)	Up to 100

[1] Maximum torque given by available output and nominal speed.

[2] t_r = air temperature at compressor inlet of turbocharger; t_{cr} = cooling water temperature before charge air cooler; p_r = atmospheric pressure.

[3] In accordance with DIN ISO 3046-1 and for further clarification of relevant sections within DIN ISO 8528-1, the following is specified:
- The maximum output (MCR) has to be observed by the power management system of the plant.
- The range of 100 % up to 110 % fuel admission may only be used for a short time for governing purposes (e.g. transient load conditions and suddenly applied load).

[4] Only applicable with nominal speed of 750 rpm.

[5] According to DIN ISO 3046-1 MAN Energy Solutions has specified a maximum continuous rating for marine engines listed in the column $P_{Application}$.

[6] Special turbocharger matching required.

Table 15: Available outputs/related reference conditions

Note:
Power fluctuations in the electrical grid.
It is an intrinsic property of the powertrain of a generating set that it acts as a torsional vibration system. This complex system consists of the engine, coupling and generator (within or outside MAN Energy Solutions scope of supply) and the electric plant. Such electric power plant can be consisting of further power sources as well as consumers (such as electric motors), transformers, frequency converters, energy storage systems, bus bars or circuit breakers

2025-06-16 - 1.0

and the entire distribution system (within or outside MAN Energy Solutions scope of supply). The reciprocating engine, as well as the electric power distribution or the other consumers and power sources excite the system. As a consequence, the active power at the generator terminals is not completely constant over time and some additional power oscillations so-called power fluctuations occur. These power fluctuations do not affect the operational safety of the generating set, as long as the stability requirements of the electric system in regards to frequency and voltage meet the class requirements. In addition, this behavior is in accordance with ISO 8528-5 [1] and does as per MAN Energy Solutions experience not affect power system stability in an unacceptable range. Gas operated engines tend to show greater power fluctuations than engines operated with liquid fuels. This belongs to the typical cyclical fluctuations of the Otto combustion process that uses a premixed combustion. Note that MAN Energy Solutions quotations do not consider any specific limitations regarding power fluctuations. On request by the purchaser, MAN Energy Solutions provides support or further analysis of the overall system behavior, where the GenSets as well as the electric distribution and consumers should be included in the analysis.

[1] Reciprocating internal combustion engine driven alternating current generating sets – Part 5: Generating sets.

2.5.4 Derating, definition of P Operating

$P_{Operating}$: Available rating (output) under local conditions and dependent on application

Dependent on local conditions or special application demands a further load reduction of $P_{Application, ISO}$ might be required.

1. No derating

No derating necessary, provided that the conditions listed are met:

	No derating up to stated reference conditions (tropic), see 1.
Air temperature before turbocharger T_x	≤ 318 K (45°C)
Ambient pressure	≥ 100 kPa (1 bar)
Cooling water temperature inlet charge air cooler (LT stage)	≤ 311 K (38°C)
Intake air pressure before compressor	≥ –2 kPa[1)]
Exhaust gas back pressure after turbocharger	≤ 5 kPa[1)]
Relative humidity Φ_r	≤ 60%
[1)] Below/above atmospheric pressure.	

Table 16: Derating – Limits of ambient conditions

2. Derating

Contact MAN Energy Solutions:

2025-06-16 - 1.0

- If limits of ambient conditions mentioned in the upper table Derating – Limits of ambient conditions, Page 50 are exceeded. A special calculation is necessary.
- If higher requirements for the emission level exist. For the permissible requirements see section Exhaust gas emission, Page 161.
- If special requirements of the plant for heat recovery exist.
- If special requirements on media temperatures of the engine exist.
- If any requirements of MAN Energy Solutions mentioned in the Project Guide cannot be met.

2.5.5 Engine speeds and related main data

Rated speed	rpm	720	750
Permissible range of speed		[1]	
Alarm overspeed (110 % of nominal speed)		792	825
Auto shutdown overspeed (115 % of nominal speed)		828	863
Speed adjusting range		See section Speed adjusting range, Page 52	
Alternator frequency	Hz	60	50
Number of pole pairs	-	5	4

[1] According to section Operating range for GenSet/electric propulsion, Page 77, Operating range for controllable pitch propeller (CPP), Page 84, Operating range for mechanical pump drive, Page 94 and figure Permissible frequency deviations and corresponding max. output, Page 79.

Table 17: Engine speeds and related main data

2025-06-16 - 1.0

2.5.6 Speed adjusting range

The following specification represents the standard settings. For special applications, deviating settings may be necessary.

	Drive	Speed droop	Maximum speed at full load	Maximum speed at idle running	Minimum speed
Electronic speed control	1 main engine with controllable pitch propeller and without PTO	0 %	100 % (+0.5 %)	100 % (+0.5 %)	60 %
	1 main engine with controllable pitch propeller and with PTO	0 %	100 % (+0.5 %)	100 % (+0.5 %)	60 %
	Parallel operation of 2 engines driving 1 shaft with/without PTO: Load sharing via speed droop or master/slave operation	 5 % 0 %	 100 % (+0.5 %) 100 % (+0.5 %)	 105 % (+0.5 %) 100 % (+0.5 %)	 60 % 60 %
	GenSets/electric propulsion plants: With load sharing via speed droop or isochronous operation	 5 % 0 %	 100 % (+0.5 %) 100 % (+0.5 %)	 105 % (+0.5 %) 100 % (+0.5 %)	 100 %[1)] 100 %[1)]
	Fixed pitch propeller plants	0 %	100 % (+0.5 %)	-	30 %

[1)] Speed after start of the engine, before synchronisation.

Table 18: Electronic speed control

Note:
For single-engine plants with fixed pitch propeller, the speed droop is of no significance.
Only if several engines drive one shaft with fixed pitch propeller, the speed droop is relevant for the load distribution. In the case of electronic speed control, a speed droop of 0% is also possible during parallel operation.

2.6 Increased exhaust gas pressure due to exhaust gas after treatment installations

Resulting installation demands

If the recommended exhaust gas back pressure as stated in section Operating/service temperatures and pressures, Page 152 cannot be met due to exhaust gas after treatment installations following limit values need to be considered.

Exhaust gas back pressure after turbocharger	
Operating pressure Δp_{exh}, maximum specified	0–50 mbar
Operating pressure Δp_{exh}, range with increase of fuel consumption or possible derating	50–80 mbar
Operating pressure Δp_{exh}, where agreement and feedback of MAN Energy Solutions is required	> 80 mbar

Table 19: Exhaust gas back pressure after turbocharger

2025-06-16 - 1.0

Intake air pressure before turbocharger	
Operating pressure Δp_{intake}, standard	0 to –20 mbar
Operating pressure Δp_{intake}, range with increase of fuel consumption or possible derating	–20 to –40 mbar
Operating pressure Δp_{intake}, where agreement and feedback of MAN Energy Solutions is required	< –40 mbar

Table 20: Intake air pressure before turbocharger

Sum of the exhaust gas back pressure after turbocharger and the absolute value of the intake air pressure before turbocharger	
Operating pressure Δp_{exh} + Abs(Δp_{intake}), standard	0–70 mbar
Operating pressure Δp_{exh} + Abs(Δp_{intake}), range with increase of fuel consumption or possible derating	70–120 mbar
Operating pressure Δp_{exh} + Abs(Δp_{intake}), where agreement and feedback of MAN Energy Solutions is required	> 120 mbar

Table 21: Sum of the exhaust gas back pressure after turbocharger and the absolute value of the intake air pressure before turbocharger

Maximum exhaust gas pressure drop – Layout

- Supplier of equipment in exhaust gas line have to ensure that pressure drop Δp_{exh} over entire exhaust gas piping incl. pipe work, scrubber, boiler, silencer, etc. must stay below stated standard operating pressure at all operating conditions.
- It is recommended to consider an additional 10 mbar for consideration of aging and possible fouling/staining of the components over lifetime.
- A proper dimensioning of the entire flow path including all installed components is advised or even the installation of an exhaust gas blower if necessary.
- At the same time the pressure drop Δp_{intake} in the intake air path must be kept below stated standard operating pressure at all operating conditions and including aging over lifetime.
- For significant overruns in pressure losses even a reduction in the rated power output may become necessary.
- On plant side it must be prepared, that pressure sensors directly after turbine outlet and directly before compressor inlet may be installed to verify above stated figures.

By-pass for emergency operation

- Evaluate if the chosen exhaust gas after treatment installation demands a by-pass for emergency operation.
- For scrubber application, a by-pass is recommended to ensure emergency operation in case that the exhaust gas cannot flow through the scrubber freely.
- The by-pass needs to be dimensioned for the same pressure drop as the main installation that is by-passed – otherwise the engine would operated on a differing operating point with negative influence on the performance, e.g. a lower value of the pressure drop may result in too high turbocharger speeds.

Single streaming per engine recommended/multi-streaming to be evaluated project-specific

2025-06-16 - 1.0

- In general each engine must be equipped with a separate exhaust gas line as single streaming installation. This will prevent reciprocal influencing of the engine as e.g. exhaust gas backflow into an engine out of operation or within an engine running at very low load (negative pressure drop over the cylinder can cause exhaust gas back flow into intake manifold during valve overlap).
- In case a multi-streaming solution is realised (i.e. only one combined scrubber for multiple engines) this needs to be stated on early project stage. Hereby air/exhaust gas tight flaps need to be provided to safeguard engines out of operation. A specific layout of e.g. sealing air mass flow will be necessary and also a power management may become necessary in order to prevent operation of several engines at very high loads while others are running on extremely low load. A detailed analysis as HAZOP study and risk analysis by the yard becomes mandatory.

Engine to be protected from backflow of media out of exhaust gas after treatment installation

- A backflow of e.g. urea, scrubbing water, condensate or even rain from the exhaust gas after treatment installation towards the engine must be prevented under all operating conditions and circumstances, including engine or equipment shutdown and maintenance/repair work.

Turbine cleaning

- Both wet and dry turbine cleaning must be possible without causing malfunctions or performance deterioration of the exhaust system incl. any installed components such as boiler, scrubber, silencer, etc.

White exhaust plume by water condensation

- When a wet scrubber is in operation, a visible exhaust plume has to be expected under certain conditions. This is not harmful for the environment. However, countermeasures like reheating and/or a demister should be considered to prevent condensed water droplets from leaving the funnel, which would increase visibility of the plume.
- The design of the exhaust system including exhaust gas after treatment installation has to make sure that the exhaust flow has sufficient velocity in order not to sink down directly onboard the vessel or near to the plant. At the same time the exhaust pressure drop must not exceed the limit value.

Vibrations

- There must be a sufficient decoupling of vibrations between engine and exhaust gas system incl. exhaust gas after treatment installation, e.g. by compensators.

2.7 Starting

2.7.1 General remarks

Engine and plant installation need to be in accordance to the below stated requirements and the required starting procedure.

Note:
Statements are relevant for non arctic conditions.
For arctic conditions consider relevant sections and clarify undefined details with MAN Energy Solutions.

2025-06-16 - 1.0

2.7.2 Type of engine start

Normal start

The standard procedure of a monitored engine start in accordance to MAN Energy Solutions guidelines.

For details and requirements see section Starting conditions, Page 57.

Stand-by start

Shortened starting up procedure of a monitored engine start: Several preconditions and additional plant installations required.

This kind of engine start has to be triggered by an external signal: "Stand-by start required".

For details and requirements see section Starting conditions, Page 57.

Exceptional start (e.g. blackout start)

A monitored engine start (without monitoring of lube oil pressure) within one hour after stop of an engine that has been faultless in operation or of an engine in stand-by mode.

This kind of engine start has to be triggered by an external signal “Black Start” and may only be used in exceptional cases.

For details and requirements see section Starting conditions, Page 57.

Emergency start

Manual start of the engine at emergency start valve at the engine (if applied), without supervision by the SaCoS engine control. These engine starts will be applied only in emergency cases, in which the customer accepts, that the engine might be harmed.

2.7.3 Requirements on engine and plant installation

General requirements on engine and plant installation

As a standard and for the start-up in normal starting mode (preheated engine) following installations are required:

Engine
Plant

- Lube oil service pump (attached)
- Prelubrication pump (free-standing)
- Preheating HT cooling water system (60–90°C)
- Preheating lube oil system (> 40°C). For maximum admissible value see table Lube oil, Page 155
- For FPP application the availability of the lube oil service support pump must be ensured.

Requirements on engine and plant installation for "Stand-by operation" capability

To enable in addition to the normal starting mode also an engine start from PMS (power management system) from stand-by mode with thereby shortened start-up time following installations are required:

Engine

- Lube oil service pump (attached).

2025-06-16 - 1.0

Plant

- Prelubrication pump (free-standing) with low pressure before engine (0.3 bar < $p_{Oil\ before\ engine}$ < 0.6 bar)
- Preheating HT cooling water system (60–90°C)
- Preheating lube oil system (> 40°C). For maximum admissible value see table Lube oil, Page 155
- Power management system with supervision of stand-by times engines
- For FPP application the availability of the lube oil service support pump must be ensured.

Additional requirements on engine and plant installation for "Blackout start" capability

Following additional installations to the above stated ones are required to enable in addition a "Blackout start":

Engine

- HT CW service pump (attached) recommended
- LT CW service pump (attached) recommended
- Attached fuel oil supply pump recommended (if applicable)

Plant

- Regarding "Blackout start" fuel oil conditions, see table Fuel, Page 156

If fuel oil supply pump is not attached to the engine:

- Air driven fuel oil supply pump or fuel oil service tanks at sufficient height or pressurised fuel oil tank

2025-06-16 - 1.0

2.7.4 Starting conditions

Type of engine start:	Blackout start	Stand-by start	Normal start
Explanation:	After blackout	From stand-by mode	After stand-still
Start-up time until load application:	< 1 minute	< 1 minute	> 2 minutes
General notes			
-	Engine start-up only within 1 h after stop of engine that has been faultless in operation or within 1 h after end of stand-by mode.	Maximum stand-by time 7 days[1]. Supervised by power management system plant. Stand-by mode is only possible after engine has been faultless in operation and has been faultless stopped.	Standard
Additional external signal:	Blackout start	Stand-by request	-

[1] If an engine has been in total for 7 days in stand-by mode, no extension of stand-by mode is allowed. The engine needs to be started and operated faultless before the next stand-by mode can be applied.

Prior to next stand-by mode, engine needs to be operated at minimum 50% output for ≥ 30 min.

Table 22: Starting conditions – General notes

Type of engine start:	Blackout start	Stand-by start	Normal start
General engine status	No start-blocking active	Engine in proper condition No start-blocking active Note: Start-blocking of engine leads to withdraw of "stand-by mode".	Engine in proper condition No start-blocking active
Engine to be turned before start?	No	No	Yes[1]
Engine to be preheated and prelubricated?	No[2]	Yes	Yes

[1] It is recommended to install Slow Turn. Otherwise the engine has to be turned by turning gear.

[2] Valid only, if mentioned above conditions (see table Starting conditions – General notes, Page 57) have been considered. Non-observance endangers the engine or its components.

Table 23: Starting conditions – Required engine conditions

2025-06-16 - 1.0

Type of engine start:	Blackout start	Stand-by start	Normal start
Lube oil system			
Prelubrication period	No[1)]	Permanent	Yes, previous to engine start
Prelubrication pressure before engine	-	See section Operating/service temperatures and pressures, Page 152 limits according figure "Prelubrication/postlubrication lube oil pressure (duration > 10 min)"	See section Operating/service temperatures and pressures, Page 152 limits according figure "Prelubrication/postlubrication lube oil pressure (duration ≤ 10 min)"
Lube oil to be preheated?	No[1)]	Yes	Yes
HT cooling water			
HT cooling water to be preheated?	No[1)]	Yes	Yes
Fuel system			
For MGO/MDO operation	Sufficient fuel oil pressure at engine inlet required.	Supply pumps in operation or with starting command to engine.	
For HFO operation	Sufficient fuel oil pressure at engine inlet required. Emergency fuel supply pumps in MGO/MDO mode always.	Supply and booster pumps in operation, fuel preheated to operating viscosity. In case of permanent stand-by of liquid fuel engines or during operation of an DF engine in gas mode a periodical exchange of the circulating HFO has to be ensured to avoid cracking of the fuel. This can be done by releasing a certain amount of circulating HFO into the day tank and substituting it with "fresh" fuel from the tank.	
[1)] Valid only, if mentioned above conditions (see table Starting conditions – General notes, Page 57) have been considered. Non-observance endangers the engine or its components.			

Table 24: Starting conditions – Required system conditions

Additional remark regarding "Blackout start"

If additional requirements on engine and plant installation for "Blackout start" capability are fullfilled, it is possible to start up the engine in shorter time. But untill all media systems are back in normal operation the engine can only be operated according to the settings of alarm and safety system.

2025-06-16 - 1.0

2.8 Start-up and load application

2.8.1 General remarks

To limit the effort regarding regulating the media circuits, also to ensure an uniform heat input it always should be aimed for longer load application times by taking into account the realistic requirements of the specific plant.

All questions regarding the dynamic behaviour should be clarified in close co-operation between the customer and MAN Energy Solutions at an early project stage.

Requirements for plant design:

- The load application behaviour must be considered in the electrical system design of the plant.
- The system operation must be safe in case of graduated load application.
- The load application conditions (E-balance) must be approved during the planning and examination phase.
- The possible failure of one engine must be considered, see section Generator operation/electric propulsion – Power management, Page 79.

2.8.2 Definitions and requirements

General remark

Prior to the start-up of the engine it must be ensured that the emergency stop of the engine is working properly. Additionally all required supply systems must be in operation or in stand-by operation.

Start-up – Cold engine

If an engine start has to be activated under cold engine conditions, following requirements have to be fullfilled as a minimum:

- Lube oil temperature > 20°C, HT cooling water temperature > 20°C.
- Distillate fuel must be used until warming up phase is completed.
- The engine is prelubricated. Due to the higher viscosity of the lube oil of a cold engine the prelubrication phase needs to be increased.

Before further use of the engine a warming-up phase is required to reach at least the level of the regular preheating temperatures (lube oil temperature > 40°C, cooling water temperature > 60°C). See diagrams in section Load application – Continuous loading, Page 60.

Note:

- It needs to be proven within plant layout, that lube oil circuit is capable to be operated at stated low lube oil temperature with accordingly high viscosity and high pressures.
- If engine cold start is frequently performed, wear could increase in a long-term perspective.
- “Start-Reliability” under stated cold start conditions is reduced and cannot be guaranteed, as the probability of a false start is increased.
- If applicable, warming-up phase can be shortened if engine is operated at lower speed.

Start-up – Preheated engine (Normal start)

For the start-up of the engine it needs to be preheated:

- Lube oil temperature ≥ 40°C.
- HT cooling water temperature ≥ 60°C.

2025-06-16 - 1.0

The required start-up time in normal starting mode (preheated engine), with the required time for starting-up the lube oil system and prelubrication of the engine is shown in the diagrams in section Load application – Continuous loading, Page 60 in connection with the information in figure(s) Duration of the load application – Continuous loading, Page 62.

Start-up – Engine in stand-by mode (Stand-by start)

For engines in stand-by mode no start preparation is needed and accordingly the engine start will be done just after the start request (if preconditions are fulfilled).

Required conditions media system:

- 0.3 bar < prelubrication pressure before engine < 0.6 bar.
- Lube oil temperature ≥ 40°C, see accordingly section Lube oil system, Page 310
- HT cooling water temperature ≥ 60°C

Start-up (Exceptional start)

The engine start will be done just after the start request – but as previously stated without monitoring of lube oil pressure, and therefore this may only be used in exceptional cases.

Speed ramp-up

The standard speed ramp-up serves for all engine conditions and ensures a low opacity level of the exhaust gas.

A "fast speed ramp-up", that is near to the maximum capability of the engine, may be used in exceptional cases.

For liquid fuel engines:

- Exhaust gas will be visible (opacity > 60%).
- External signal from plant to be provided for request to SaCoSone.

Load ramp-up

The time needed for load ramp-up is in high extent dependent on the engine conditions:

- Cold

  (If applicable see "Start-up – Cold engine" for remarks and temperatures)
- Warm (= preheated)
  - Lube oil temperature ≥ 40°C.
  - HT cooling water temperature ≥ 60°C.
- Hot (= previously been in operation)
  - Lube oil temperature ≥ 40°C.
  - HT cooling water temperature ≥ 60°C.
  - Exhaust gas pipe engine and turbocharger > 320°C (within 1 h after engine stop).

Note:
Load application handled within plant automation:
The compliance of the load application with the specifications of MAN Energy Solutions has to be handled within the plant automation.
The SaCoS engine control will not interfere in the load ramp-up or load ramp-down initiated by the plant control.

2.8.3 Load application – Continuous loading

The start procedure after "Starting request" is structured into following phases:

Start preparation (consists of phase 1, 2 and 3)

2025-06-16 - 1.0

- Phase 1:
  Pressure formation in the lube oil system to gain specified lube oil pressure before engine.
- Phase 2:
  Prelubrication and pre-processing of the engine for specified time.
- Phase 3:
  "Slow Turn" function activated, if required.

Start process and running-up to minimum speed (consists of phase 4 and 5)

- Phase 4:
  Activation of starting system engine till engine is running.
- Phase 5:
  Increase of engine speed till specified minimum speed is reached.

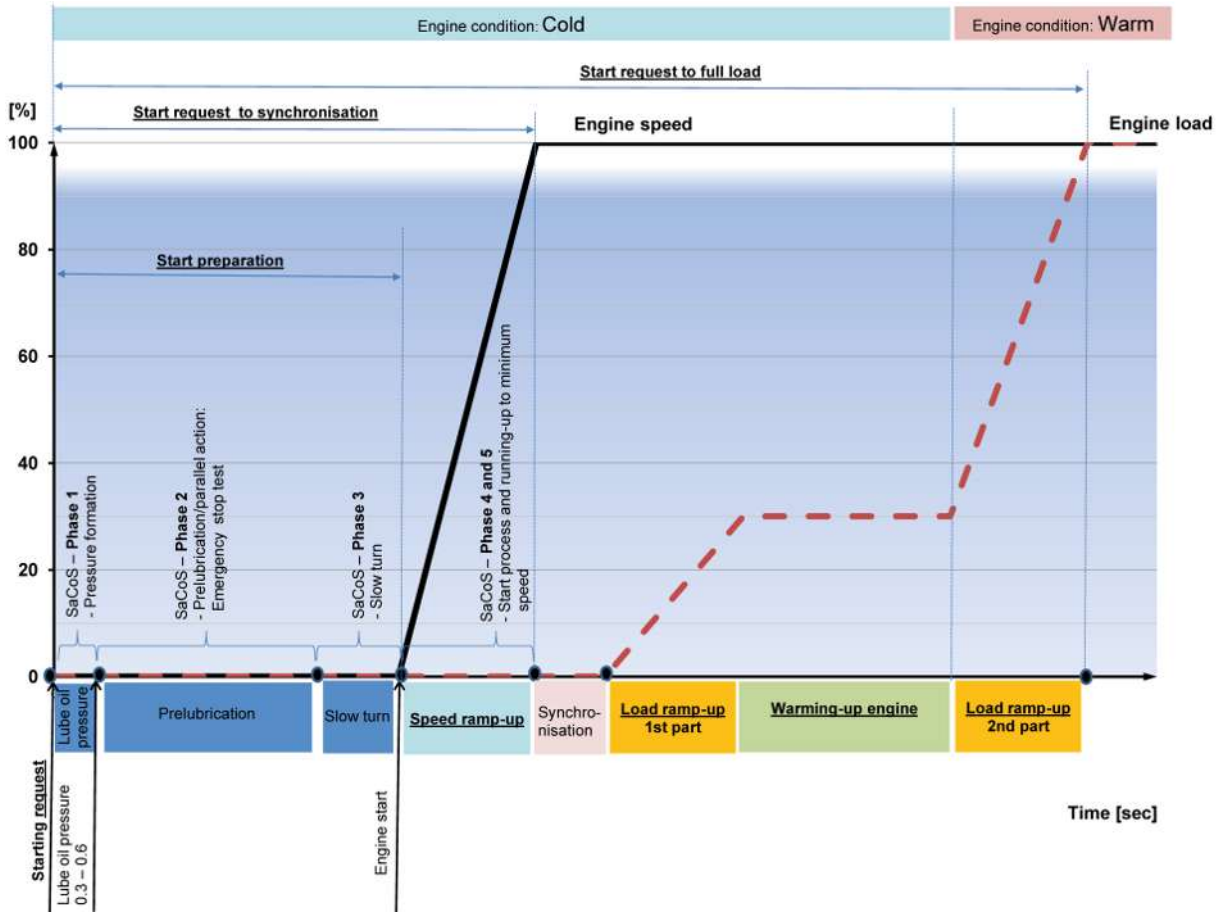

Figure 19: Start-up and load ramp-up for cold engine condition (emergency case)

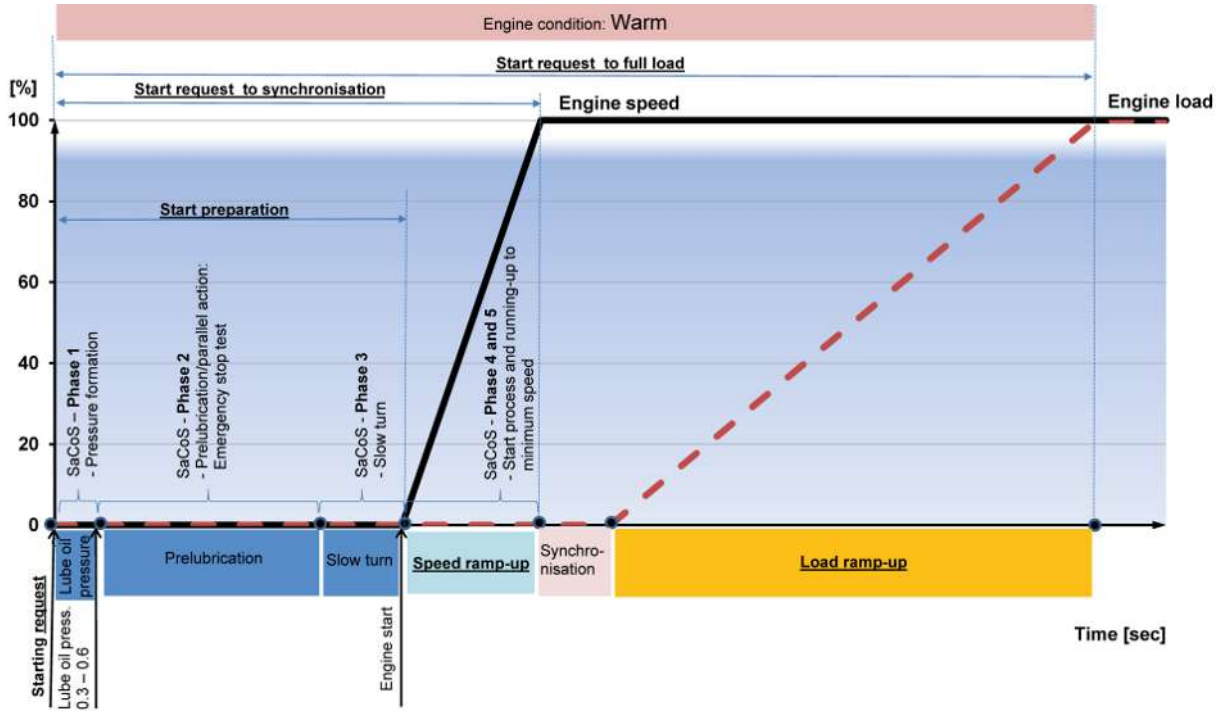

Figure 20: Start-up and load ramp-up for warm/hot engine condition

Find in the table below the relevant durations for the phases in above given diagrams.

Note:

- For "Phase 3" the engine needs to be equipped with "Slow Turn".
- Jet assist as engine equipment is recommended.
- If "fast speed ramp-up" is needed, the possibility of this has to be clarified on a project-specific basis.
- For "stand-by" special plant equipment is required.

32/40 - Duration "Start request to full load"								
	Engine condition / (recommended time)	Start preparation [sec]			Speed ramp-up [sec]	Synchronisation [sec]	Load ramp-up [sec]	Total [sec] Start request to 100 % load
		Phase 1	Phase 2	Phase 3	Phase 4 and 5		() Exceptional loading with clear visible smoke	() Exceptional with clear visible smoke
32/40 1)	Warm and Stand-by	0	0	0	50	10	65	125
					(13)		(30)	(53)
	Hot and Stand-by	0	0	0	50	10	60	120
					(13)		(25)	(48)

1) Engine equipped with jet assist

Figure 21: Duration of the load application – Continuous loading (extract)

2025-06-16 - 1.0

For further information or deviating engine condition/equipment contact MAN Energy Solutions.

2.8.4 Load application – Load steps (for electric propulsion/auxiliary GenSet)

Minimum requirements of classification societies and ISO rule

The specification of the IACS (Unified Requirement M3) contains first of all guidelines for suddenly applied load steps. Originally two load steps, each 50%, were described. In view of the technical progress regarding increasing mean effective pressures, the requirements were adapted. According to IACS and ISO 8528-5 a diagram is used to define – based on the mean effective pressure of the respective engine – the number of load steps for a load application from 0% load to 100% load. This diagram serves as a guideline for four-stroke diesel engines in general and is reflected in the rules of the classification societies.

Be aware, that for marine engines load application requirements must be clarified with the respective classification society as well as with the shipyard and the owner.

Accordingly MAN Energy Solutions has specified the following table.

Declared power mean effective pressure of the engine (p_{me})	Number of load steps
> 13.5 bar up to 18 bar	3
> 18 bar up to 22.5 bar	4
> 22.5 bar up to 27 bar	5
> 27 bar	6
The size of each load step to be calculated as: 100% load divided by "Number of load steps". For example: 100% load / "4" = 25% load increase per load step.	

Table 25: Number of load steps dependent on the p_{me} of the engine according IACS M3 Rev.6, four-stroke diesel engines

Boundary conditions for load steps according table above:

- Engine and media systems faultless in operation
- Engine as a minimum preheated
- Before an additional load step will be applied, at least 20 seconds waiting time after initiation of the previous load step needs to be considered

Performance according IACS M3 Rev.6 for MAN Energy Solutions GenSets as a standard will be fullfilled

As a standard, MAN Energy Solutions Gensets fulfill the requirements of the performance according IACS M3 Rev.6. (as stated in table below). Clarify any higher project-specific requirements at an early project stage with MAN Energy Solutions. They must be part of the contract.

	IACS M3 Rev.6
Auto shutdown overspeed	at 115% of nominal speed
Alarm overspeed	at 110% of nominal speed
Frequency drop (Max. remaining speed deviation in the whole load range)	≤ 5% of nominal frequency
Steady-state frequency band (Deviation at recent frequency at constant load)	≤ 1.0% of recent frequency

2025-06-16 - 1.0

	IACS M3 Rev.6
In case of power increase	
Transient frequency deviation related to rated frequency (Dynamic speed drop)	≤ -10% of nominal frequency
Only for gas engines	-
Frequency recovery time (till frequency is within steady-state frequency band of new frequency)	≤ 5 sec
In case of 100% load drop	
Transient frequency deviation related to rated frequency (Dynamic speed increase)	≤ +10% of nominal frequency
Frequency recovery time (till frequency is within steady-state frequency band of new frequency)	≤ 5 sec

Table 26: Requirements according IACS M3 Rev.6

SCR regeneration phase

Dependent on the ambient conditions during the regeneration phase of the SCR the load application capability may be limited and may not reach the level shown below.

Engine specific load steps – Maximum load step dependent on base load

Boundary conditions:

- Engine and media systems faultless in operation
- Engine condition hot
- Engine in steady state for minimum 5 min

If above stated boundary conditions are fulfilled, the maximum load step which can be applied as a function of the currently driven base load can be derived out of the below stated diagram(s).

2025-06-16 - 1.0

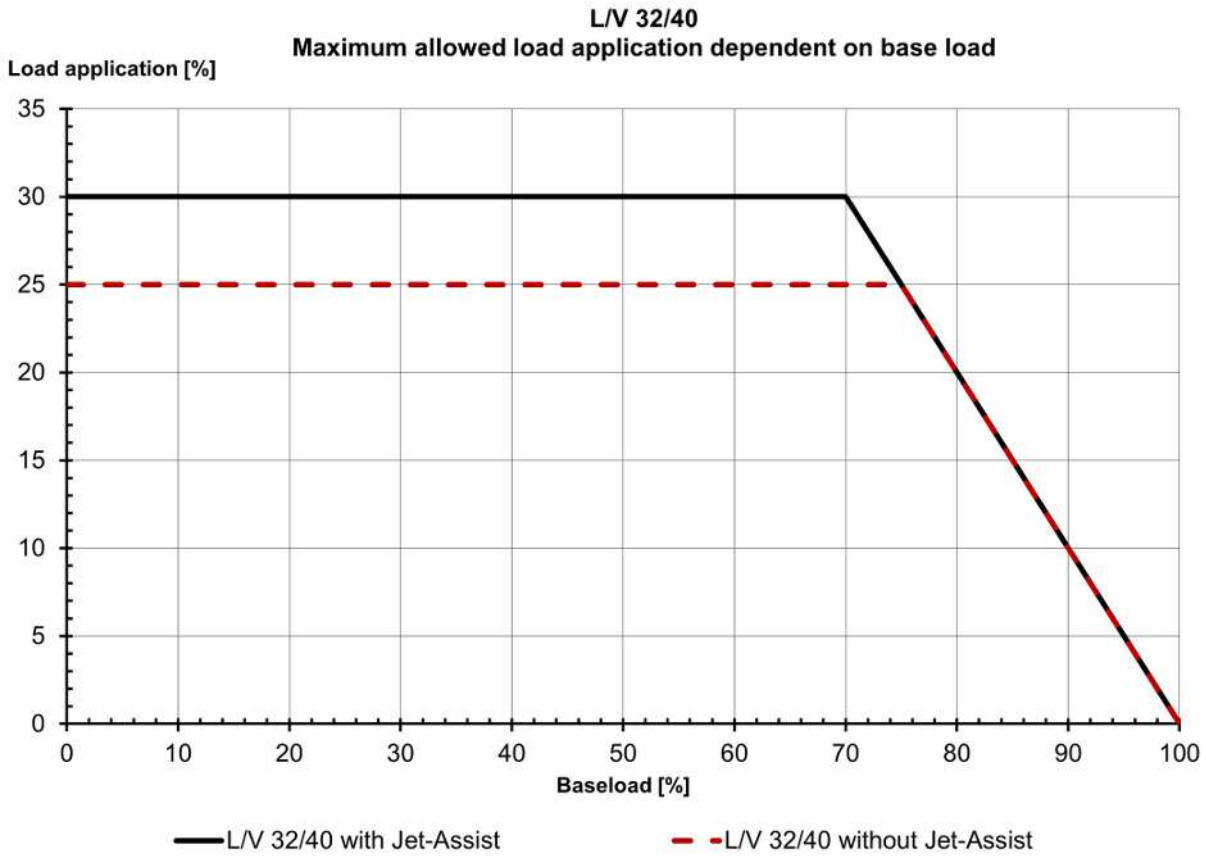

Figure 22: Load application dependent on base load (engine condition hot) – 32/40CD TCF, performance according IACS M3 Rev.6

2.8.5 Load application for mechanical propulsion (FPP and CPP)

Acceleration times for fixed pitch and controllable pitch propeller plants

General remark

Stated acceleration times in the following figure are valid for the engine itself. Depending on the project-specific propulsion train (moments of inertia, vibration calculation etc.) project-specific this may differ. Of course, the acceleration times are not valid for the ship itself, due to the fact, that the time constants for the dynamic behavior of the engine and the vessel may have a ratio of up to 1:100, or even higher (dependent on the type of vessel). The effect on the vessel must be calculated separately.

Propeller control

For remote controlled propeller drives for ships with unmanned or centrally monitored engine room operation in accordance to IACS “Requirements concerning MACHINERY INSTALLATIONS”, M43, a single control device for each independent propeller has to be provided, with automatic performance preventing overload and prolonged running in critical speed ranges of the propelling machinery. Operation of the engine according to the relevant and specific operating range (e.g. Operating range for controllable pitch propeller (CPP)) has to be ensured. In case of a manned engine room and manual operation of the propulsion drive, the engine room personnel are responsible for the soft loading sequence, before control is handed over to the bridge.

2025-06-16 - 1.0

If the direction of the drive shaft is to be changed during maneuvering (applies in particular to fixed pitch propeller plants) the resulting jolt, the possibility of wind milling and operation in the permitted operating range of the engine needs to be considered. It should be aimed for the lowest possible rotational speed of the propeller shaft, when the rotation direction change is initiated. Already in the project planning and design phase the installation of a shaft brake should be considered.

Load control programme

The lower time limits for normal and emergency manoeuvres are given in our diagrams for application and shedding of load. We strongly recommend that the limits for normal manoeuvring are observed during normal operation. An automatic change-over to a shortened load programme is required for emergency manoeuvres. The final design of the programme should be jointly determined by all the parties involved, considering the demands for manoeuvring and the actual service capacity.

2025-06-16 - 1.0

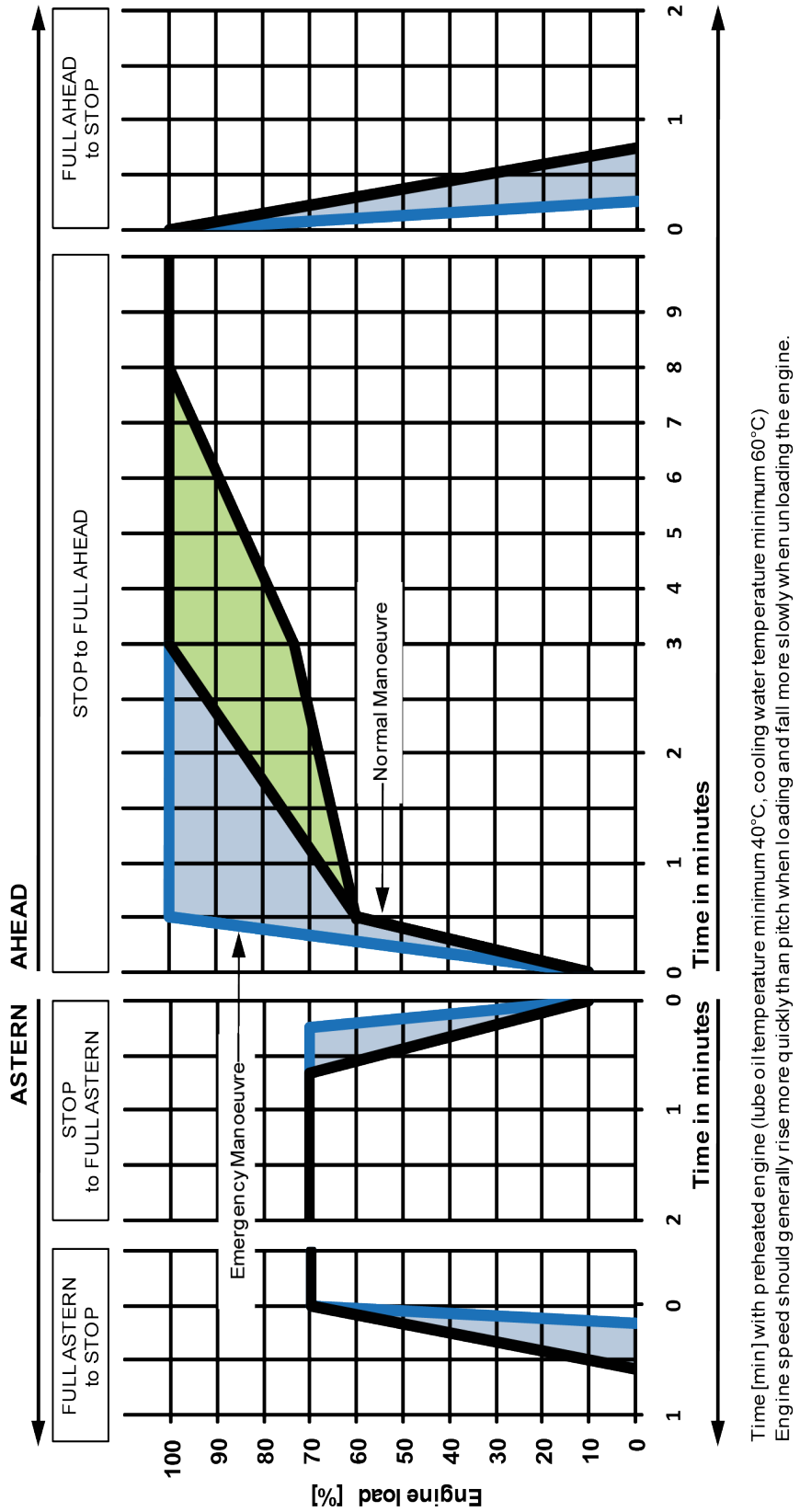

Figure 23: Control lever setting and corresponding engine specific acceleration times (for guidance)

2025-06-16 - 1.0

2.9 Low-load operation

Definition

Basically, the following load conditions are distinguished:

Overload:	> 100% (MCR) of the engine output (not admitted, see section Engine ratings (output) for different applications, Page 49)
Full load (MCR):	100% (MCR) of the engine output
Part load:	< 100% (MCR) of the engine output
Low load:	< 25% of the engine output

Correlations

The best operating conditions for the engine prevail under even loading in the range of 60% to 90% of full load.

During idle or no-load operation, combustion in the combustion chamber is incomplete.

This may result in the forming of deposits in the combustion chamber, which will lead to increased soot emission and to increasing cylinder contamination.

This process is more acute in low-load operation and during manoeuvring when the cooling water temperatures are not kept at the required level, and are decreasing too rapidly. This may result in too low charge air and combustion chamber temperatures, deteriorating the combustion at low loads especially in residual fuel oil operation (HFO operation).

Operation with residual fuel oil (HFO) or with marine gas oil (DMA, DFA) or marine diesel oil (DMB, DFB)

Based on the above, the low-load operation in the range of < 25 % of the full load is subjected to specific limitations. According to figure Time limitation for low-load operation (left), duration of "relieving operation" (right), Page 68 immediately after a phase of low-load operation the engine must be operated at > 70 % of the full load for some time in order to reduce the deposits in the cylinders and the exhaust gas turbocharger again.

- Provided that the specified engine operating values are observed, there are no restrictions at loads > 25 % of the full load.
- Continuous operation at < 25 % of the full load should be avoided whenever possible.
- No-load operation, particularly at nominal speed (alternator operation) is only permissible for one hour maximum.

After 500 hours of continuous operation with liquid fuel, at a low load in the range of 20 % to 25 % of the full load, the engine must be run-in again.

See section Engine running in, Page 485.

2025-06-16 - 1.0

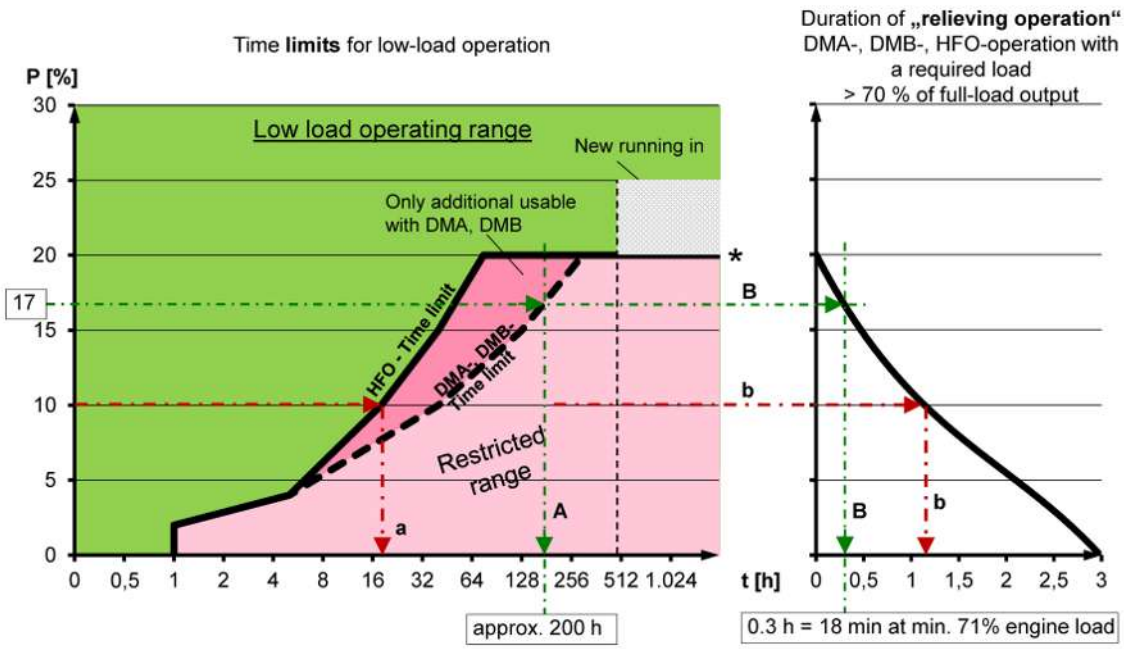

Figure 24: Time limitation for low-load operation (left), duration of "relieving operation" (right)

P % of the full load

t Operating time in hours (h)

* Generally, the time limits in residual fuel oil operation (HFO operation) apply to all HFO grades according to the designated fuel specification. In certain rare cases, when HFO grades with a high ignition delay together with a high coke residues content are used, it may be necessary to raise the total level of the limiting curve for HFO from 20% up to 30%.

Example for residual fuel oil (HFO, if applicable)

Line a — Time limits for low-load operation with residual fuel oil (HFO):

At 10% of the full load, operation on residual fuel oil (HFO) is allowable for 19 hours maximum.

Line b — Duration of "relieving operation":

Let the engine run at a load >70% of the full load appr. within 1.2 hours to burn the deposits formed.

Note:
The acceleration time from the actual load up to 70% of the full load must be at least 15 minutes.

Example for marine gas oil (DMA, DFA), marine diesel oil (DMB, DFB)

Line A — Time limits for low-load operation with DMA/DMB:

At 17% of the full load, operation on DMA/DMB is allowable appr. for 200 hours maximum.

Line B — Duration of "relieving operation":

Let the engine run at a load >70% of the full load appr. within 18 minutes to burn the deposits formed.

2025-06-16 - 1.0

Note:
The acceleration time from the actual load up to 70% of the full load must be at least 15 minutes.

Important remark for SCR operation

Long-term low-load operation may lead to an increase of the back pressure of the SCR system and initiate the regeneration. It may be required to adapt the engine load during the regeneration phase.

If the automatic regeneration occurs more than once per day, the engine load must be adapted manually to reach sufficient temperatures for the regeneration process.

2.10 Engine load reduction and engine stop

Sudden load shedding

For the sudden load shedding from 100% to 0% engine load, several requirements of the classification societies regarding the dynamic and permanent change of engine speed have to be fulfilled.

In case of a sudden load shedding and related compressor surging, check the proper function of the turbocharger silencer filter mat.

Recommended load reduction/stopping the engine

Figure Engine ramping down, generally, Page 72 shows the shortest possible times for continuously ramping down the engine.

Even with the stated shortest possible times for continuously ramping down (Phase 1 and Phase 2) the requirements of ISO 8528-5 G2 will be fulfilled.

To limit the effort regarding regulating the media circuits and also to ensure an uniform heat dissipation it always should be aimed for longer ramping down times by taking into account the realistic requirements of the specific plant.

Before final engine stop, the engine has to be operated for a minimum of 1 minute in no-load operation.

Run-down cooling

In order to dissipate the residual engine heat, the system circuits should be kept in operation after final engine stop.

	Minimum operation time after final engine stop
Lube oil circuit	15 min.
HT circuit[1)]	15 min.
LT circuit[2)]	15 min.

[1)] See accordingly for the layout of the HT cooling water pump: Table Minimum flow rate during preheating and post-cooling, Page 343.

[2)] See accordingly for the layout of the LT cooling water pump section LT cooling water system, Page 339.

Table 27: System circuit operation time after engine stop

2025-06-16 - 1.0

If for any reason the HT cooling water stand-by pump is not in function, the engine has to be operated for 15 minutes at 0% to 10% load before final stop, so that with the engine driven HT cooling water pump the heat will be dissipated.

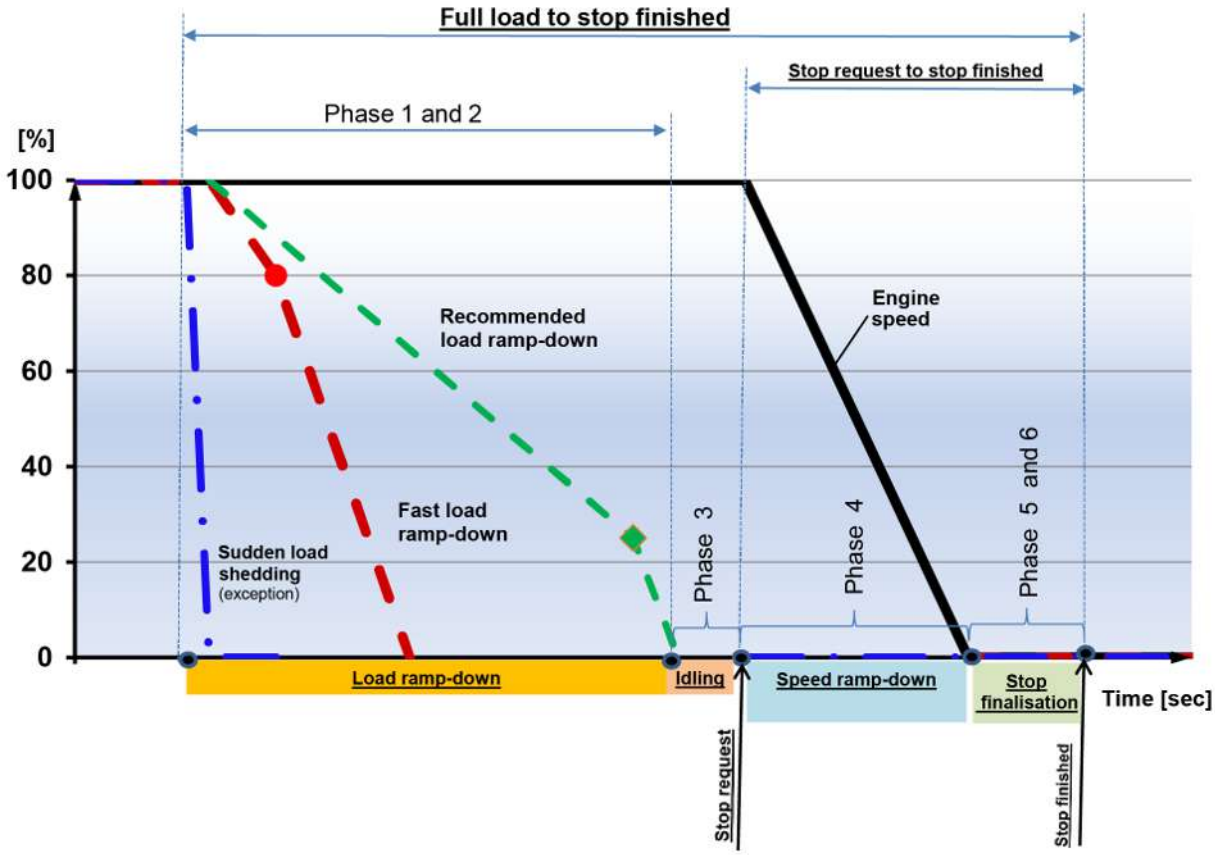

Figure 25: Engine ramping down, generally

2025-06-16 - 1.0

Duration "Full load to stop finished"						
Phase	1	2	3	4	5 + 6	-
Designation	Load ramp-down	Load ramp-down	Idling	Speed ramp-down	5) SaCoS stop process finalisation	Total duration ≥
					6) Run down cooling and lubrication	
Fast stop						
Speed [%]	100	100	100	100–0	0	-
Load [%]	100–80	80–0	0	0	0	-
Time [sec]	4	6	60	60	5) In case of active stand-by 60 sec otherwise: > 300 sec	430
					6) 900 sec	1,030
Recommended stop						
Speed [%]	100	100	100	100–0	0	-
Load [%]	100–25	25–0	0	0	0	-
Time [sec]	115	5	10	60	5) In case of active stand-by 60 sec otherwise: > 300 sec	490
					6) 900 sec	1,090
[1] Run down cooling, for details see table System circuit operation time after engine stop, Page 70.						

Table 28: Recommended load reduction/stopping the engine

2.11 Engine load reduction as a protective safety measure

Requirements for the power management system/propeller control

In case of a load reduction request due to predefined abnormal engine parameter (e.g. high exhaust gas temperature, high turbine speed, high lube oil temperature) the power output (load) must be ramped down as fast as possible to ≤ 60% load.

Therefore the power management system/propeller control has to meet the following requirements:

- After a maximum of 5 seconds after occurrence of the load reduction signal, the engine load must be reduced by at least 5%.
- Then, within the next time period of maximum 30 sec an additional reduction of engine load by at least 35% needs to be applied.

2025-06-16 - 1.0

- The “Prohibited range” shown in figure Engine load reduction as a protective safety measure, Page 73 has to be avoided.

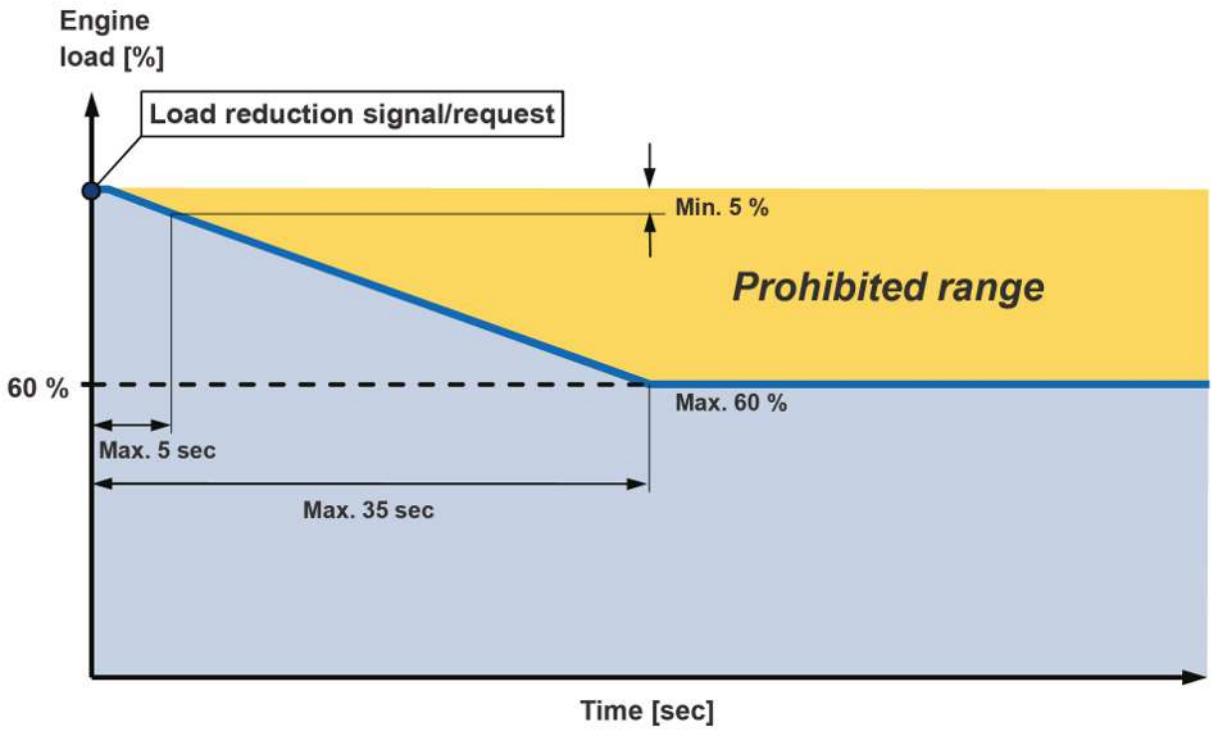

Figure 26: Engine load reduction as a protective safety measure

2.12 Engine operation under arctic conditions

Arctic condition is defined as:

Air intake temperatures of the engine below 0°C.

If engines operate under arctic conditions (intermittently or permanently), the engine equipment and plant installation have to hold certain design features and meet special requirements. They depend on the possible minimum air intake temperature of the engine and the specification of the fuel used.

Minimum air intake temperature of the engine, t_x:

- Category 1
  $0°C > t_x > -15°C$
- Category 2
  $-15°C \geq t_x > -50°C$

Piping for charge air blow-off

To ensure a correct operation of the charge air blow-off, the following need to be considered:

- Charge air blow-off flap installed at plant
- Diameter of piping > DN100
- Admissible pressure loss in piping between engine and flap: < 500 mbar
- Admissible pressure loss in piping after flap: < 1,000 mbar

2025-06-16 - 1.0

Hereby as additional information, the expected charge air blow-off amount (per cylinder) and temperature is stated, dependent on the intake air temperature before compressor.

Intake air temperature before compressor [°C]		**-55**	**-25**	**0**	**5**
Max. blow-off mass flow per cylinder (100% engine load) [kg/s]		0.27	0.13	0.25	0
Max. blow-off temperature [°C]	Hot blow-off	89	133	171	179

Table 29: Intake air temperature before compressor

Special engine design requirements

Special engine equipment required for arctic conditions category 1 and category 2, see section Engine equipment for various applications, Page 44.

Engine equipment

SaCoSone

- SaCoSone equipment is suitable to be stored at minimum ambient temperatures of –15°C.
- In case these conditions cannot be met, protective measures against climatic influences have to be taken for the following electronic components:
  - EDS Data box
  - TFT-touchscreen
  - Emergency switch module

  These components have to be stored at places, where the temperature is above –15°C.
- A minimum operating temperature of ≥ 0°C has to be ensured. The use of an optional electric heating is recommended.

See environmental conditions in section Technical data – Environmental conditions, Page 243.

Alternators

Alternator operation is possible according to suppliers specification.

Plant installation

Engine intake air conditioning

- Cooling down of engine room due to cold ambient air can be avoided by supplying the engine directly from outside with combustion air. For this the combustion air must be filtered (see quality requirements in section Specification of intake air (combustion air), Page 288). Moreover a droplet separator and air intake silencer become necessary, see section Intake air ducting in case of arctic conditions, Page 406. According to classification rules it may be required to install two air inlets from the exterior, one at starboard and one at portside.
- Cold intake air from outside is preheated in front of the cylinders in the charge air cooler. HT water serves as heat source. Depending on load and air temperature additional heat has then to be transferred to the HT circuit by a HT preheating module.
- It is necessary to ensure that the charge air cooler cannot freeze when the engine is out of operation (and the cold air is at the air inlet side). HT cooling water preheating will prevent this. Additionally it is recommended to

2025-06-16 - 1.0

prepare the combustion air duct upstream of the engine for the installation of a blanking plate, necessary to be installed in case of malfunction on the HT cooling water preheating system.

Category 1

- Charge air blow-off is activated at high engine load with low combustion air temperature. With a blow-off air duct installed in the plant, it can be recirculated in the combustion air duct upstream of the engine. Alternatively, only if blow-off air is deviated downstream of the charge air coolers and is cold (depending on engine type), blow-off air can be directly released in the engine room. Then a blow-off air silencer installed in the plant becomes necessary.
- Alternatively engine combustion air and engine room ventilation air can be supplied together in the engine room, if heated adequately and if accepted by the classification company.

Category 2

- Contact MAN Energy Solutions.

Instruction for minimum admissible fuel temperature

- In general the minimum viscosity before engine of 1.9 cSt must not be undershoot.
- The fuel specific characteristic values “pour point” and “cold filter plugging point” have to be observed to ensure pumpability respectively filterability of the fuel oil.
- Fuel temperatures of ≤ −10°C are to be avoided, due to temporarily embrittlement of seals used in the engines fuel oil system. As a result they may suffer a loss of function.

Minimum engine room temperature

- Ventilation of engine room.

  The air of the engine room ventilation must not be too cold (preheating is necessary) to avoid the freezing of the liquids in the engine room systems.
- Minimum power house/engine room temperature for design ≥ +5°C.

Coolant and lube oil systems

- Coolant and lube oil system have to be preheated for each individual engine, see section Starting conditions, Page 57.

  See also the specific information regarding special arrangements for arctic conditions, see section Lube oil system, Page 310 and Cooling water system, Page 334.
- Design requirements for the external preheater of HT cooling water systems according to stated preheater sizes, see figure Required preheater size to avoid heat extraction from HT system, Page 76.
- Maximum permissible antifreeze concentration (ethylene glycol) in the engine cooling water.

  An increasing proportion of antifreeze decreases the specific heat capacity of the engine cooling water, which worsens the heat dissipation from the engine and will lead to higher component temperatures.

  Therefore, the antifreeze concentration of the engine cooling water systems (HT and LT) within the engine room, respectively power house, should be below a concentration of 40% glycol. Any concentration of > 55% glycol is forbidden.
- If a concentration of anti-freezing agents of > 50% in the cooling water systems is required, contact MAN Energy Solutions for approval.
- For information regarding engine cooling water, see section Specification for engine supplies, Page 253.

Insulation

The design of the insulation of the piping systems and other plant parts (tanks, heat exchanger, external intake air duct, and so on) has to be modified and designed for the special requirements of arctic conditions.

2025-06-16 - 1.0

Heat tracing

To support the restart procedures in cold condition (for example, after unmanned survival mode during winter), it is recommended to install a heat tracing system in the pipelines to the engine.

Note:
A preheating of the lube oil has to be ensured. For plants taken out of operation and cooled down below temperatures of +5°C additional special measures are required. In this case contact MAN Energy Solutions.

Heat extraction HT system and preheater sizes

After engine start, it is necessary to ramp up the engine to the below specified Range II to prevent too high heat loss and resulting risk of engine damage.

Thereby Range I must be passed as quick as possible to reach Range II. Be aware that within Range II low-load operation restrictions may apply.

If operation within Range I is required, the preheater size within the plant must be capable to preheat the intake air to the level, where heat extraction from the HT system is not longer possible.

Example 1:

- Operation at 20% engine load and –45°C intake air temperature wanted.
- Preheating of intake air from –45°C up to minimum –16.5°C required.
  => According diagram preheater size of 9 kW/cyl. required.
- Ensure that this preheater size is installed, otherwise this operation point is not permissible.

All preheaters need to be operated in parallel to engine operation until minimum engine load is reached.

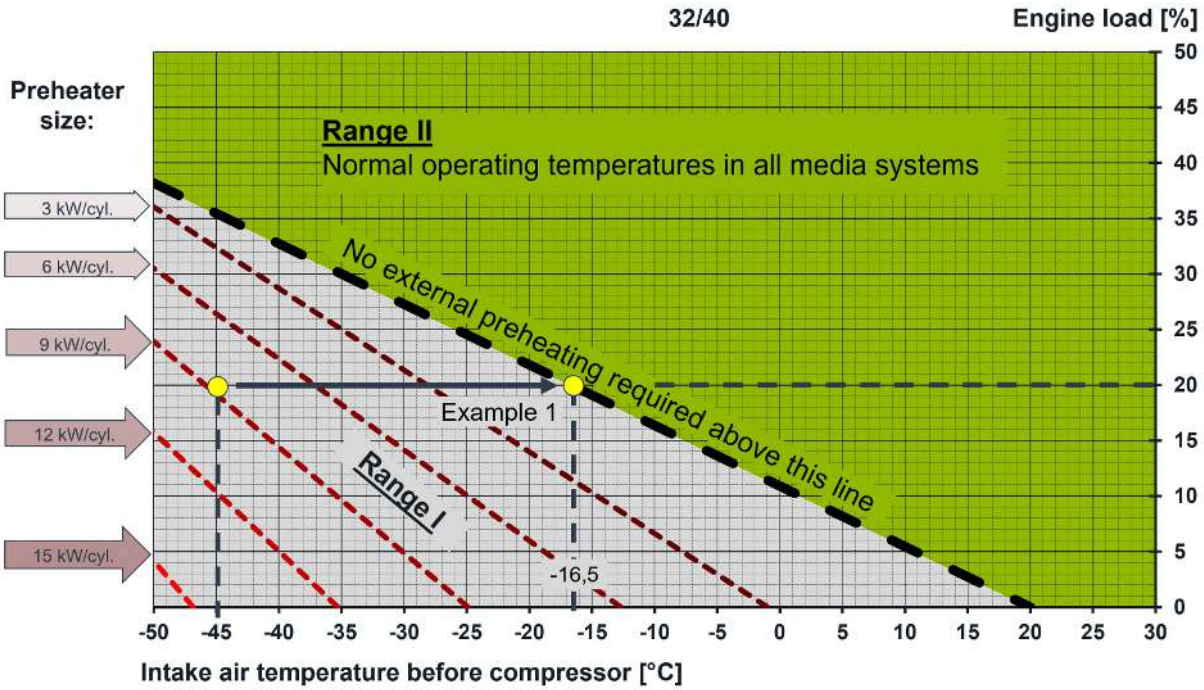

Figure 27: Required preheater size to avoid heat extraction from HT system

2025-06-16 - 1.0

Important remark for SCR operation under arctic conditions

- Note that the SCR will be deactivated below –10°C intake air temperature.

2.13 GenSet operation

2.13.1 Operating range for GenSet/electric propulsion

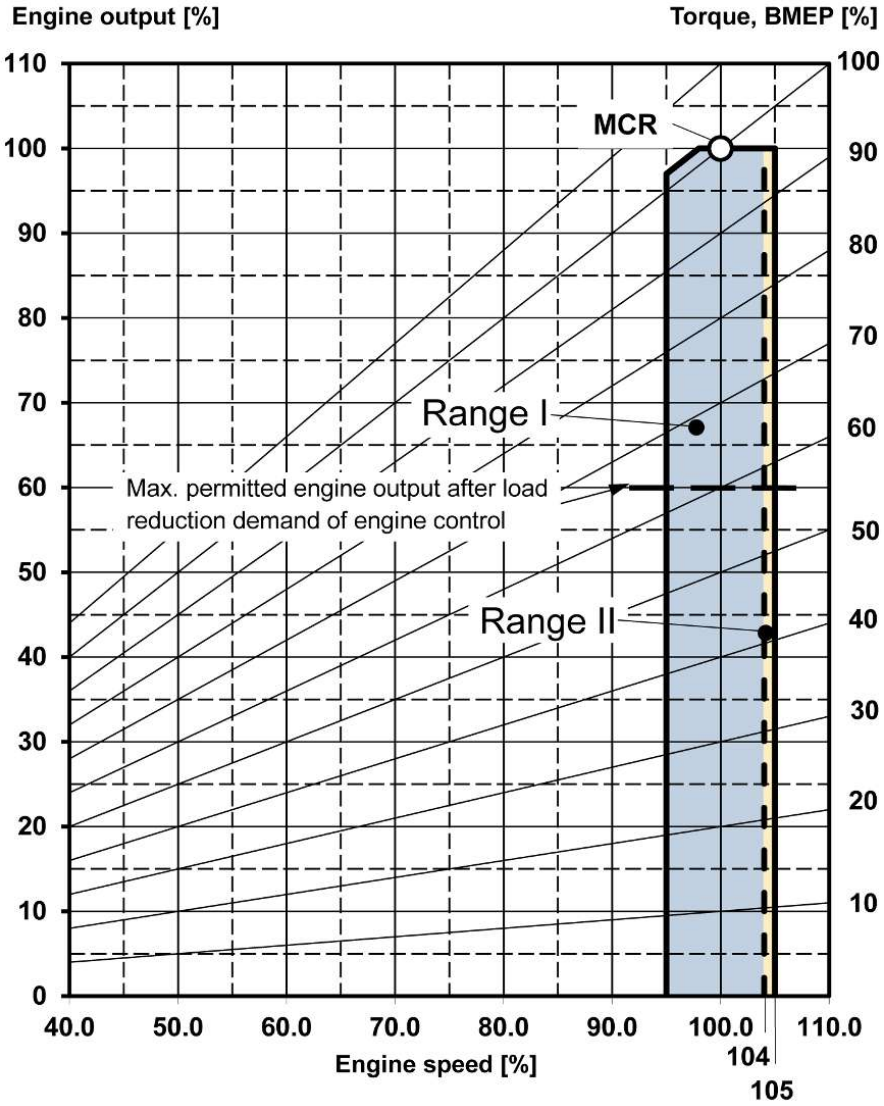

Figure 28: Operating range for GenSet/electric propulsion

- MCR[1]
  Maximum continuous rating.
- Range I
  Operating range for continuous service.
- Range II
  No continuous operation permissible.
  Maximum operating time less than 2 minutes.

[1] In accordance with DIN ISO 3046-1 and for further clarification of relevant sections within DIN ISO 8528-1, the following is specified:

2025-06-16 - 1.0

- The maximum output (MCR) has to be observed by the power management system of the plant.
- The range of 100% up to 110% fuel admission may only be used for a short time for governing purposes (for example, transient load conditions and suddenly applied load).

IMO certification for engines with operating range for electric propulsion

Test cycle type E2 will be applied for the engine´s certification for compliance with the NO_x limits according to NO_x technical code.

IMO certification for engines with operating range for auxiliary GenSet

Test cycle type D2 will be applied for the engine´s certification for compliance with the NO_x limits according to NO_x technical code.

2.13.2 Available outputs and permissible frequency deviations

General

Generating sets, which are integrated in an electricity supply system, are subjected to the frequency fluctuations of the mains. Depending on the severity of the frequency fluctuations, output and operation respectively have to be restricted.

Frequency adjustment range

According to DIN ISO 8528-5, operating limits of > 2.5% are specified for the lower and upper frequency adjustment range.

Operating range

Depending on the prevailing local ambient conditions, a certain maximum continuous rating will be available.

In the output/speed and frequency diagrams, a range has specifically been marked with “No continuous operation permissible in this area”. Operation in this range is only permissible for a short period of time, for example, for less than 2 minutes. In special cases, a continuous rating is permissible if the standard frequency is exceeded by more than 4%.

Limiting parameters

Max. torque

In case the frequency decreases, the available output is limited by the maximum permissible torque of the generating set.

Max. speed for continuous rating

An increase in frequency, resulting in a speed that is higher than the maximum speed admissible for continuous operation, is only permissible for a short period of time, that is, for less than 2 minutes.

For engine-specific information see section Ratings (output) and speeds, Page 48 of the specific engine.

2025-06-16 - 1.0

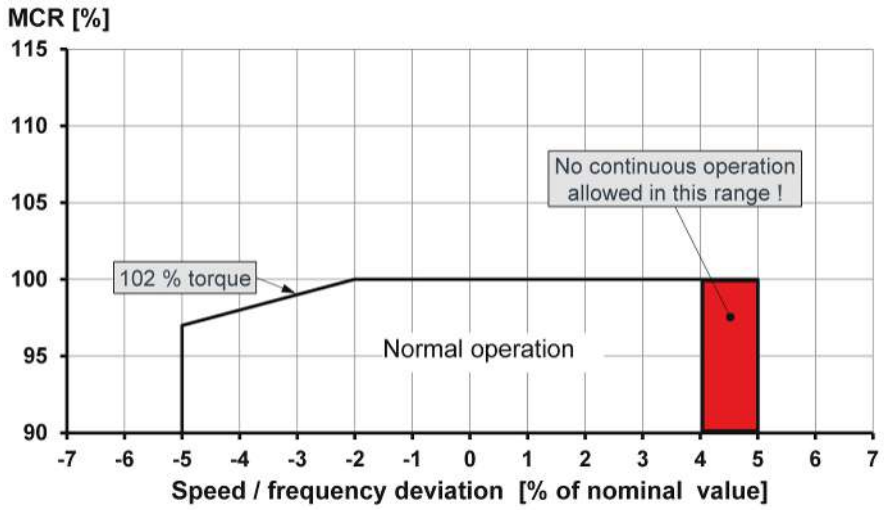

Figure 29: Permissible frequency deviations and corresponding max. output

2.13.3 Generator operation/electric propulsion – Power management

Operation of vessels with electric propulsion is defined as parallel operation of main engines with generators forming a closed system.

The power supply of the plant as a standard is done by auxilliary GenSets also forming a closed system.

In the design/layout of the plant a possible failure of one engine has to be considered in order to avoid overloading and under-frequency of the remaining engines with the risk of an electrical blackout.

Therefore we recommend to install a power management system. This ensures uninterrupted operation in the maximum output range and in case one engine fails the power management system reduces the propulsive output or switches off less important energy consumers in order to avoid under-frequency.

According to the operating conditions it is the responsibility of the ship's operator to set priorities and to decide which energy consumer has to be switched off.

The base load should be chosen as high as possible to achieve an optimum engine operation and lowest soot emissions.

The optimum operating range and the permissible part loads are to be observed (see section Low-load operation, Page 68).

Load application in case one engine fails

In case one engine fails, its output has to be made up for by the remaining engines in the system and/or the load has to be decreased by reducing the propulsive output and/or by switching off electrical consumers.

The immediate load transfer to one engine does not always correspond with the load reserve that the particular engine has available at the respective moment. That depends on the engine's base load.

2025-06-16 - 1.0

Be aware that the following section only serves as an example and is definitely not valid for this engine type. For the engine specific capability see figure(s) Load application dependent on base load (engine condition hot), Page 64.

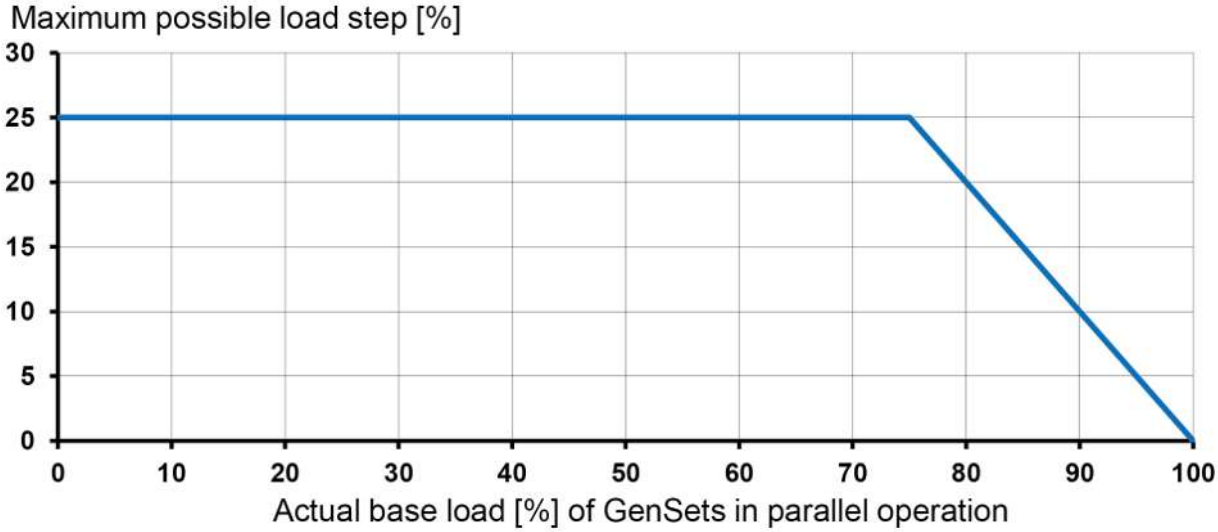

Figure 30: Maximum load step depending on base load (example may not be valid for this engine type)

Based on the above stated exemplary figure and on the total number of engines in operation the recommended maxium load of these engines can be derived. Observing this limiting maximum load ensures that the load from one failed engine can be transferred to the remaining engines in operation without power reduction.

Number of engines in parallel operation	3	4	5	6	7	8	9	10
Recommended maximum load in (%) of P_{max}	50	75	80	83	86	87.5	89	90

Table 30: Exemplary – Recommended maximum load in (%) of P_{max} dependend on number of engines in parallel operation

2.13.4 Alternator – Reverse power protection

Definition of reverse power

If an alternator, coupled to a combustion engine, is no longer driven by this engine, but is supplied with propulsive power by the connected electric grid and operates as an electric motor instead of working as an alternator, this is called reverse power. The speed of a reverse power driven engine is accordingly to the grid frequency and the rated engine speed.

Demand for reverse power protection

For each alternator (arranged for parallel operation) a reverse power protection device has to be provided because if a stopped combustion engine (fuel admission at zero) is being turned it can cause, due to poor lubrication, excessive wear on the engine´s bearings. This is also a classifications` requirement.

Examples for possible reverse power occurences

- Due to lack of fuel the combustion engine no longer drives the alternator, which is still connected to the mains.

2025-06-16 - 1.0

- Stopping of the combustion engine while the driven alternator is still connected to the electric grid.
- On ships with electric drive the propeller can also drive the electric traction motor and this in turn drives the alternator and the alternator drives the connected combustion engine.
- Sudden frequency increase, for example, because of a load decrease in an isolated electrical system -> if the combustion engine is operated at low load (for example, just after synchronising).

Adjusting the reverse power protection relay

The necessary power to drive an unfired diesel or gas engine at nominal speed cannot exceed the power which is necessary to overcome the internal friction of the engine. This power is called motoring power. The setting of the reverse-power relay should be, as stated in the classification rules, 50% of the motoring power. To avoid false tripping of the alternator circuit breaker a time delay has to be implemented. A reverse power >> 6% mostly indicates serious disturbances in the generator operation.

The following table Adjusting the reverse power relay, Page 81 provides a summary.

Admissible reverse power P_{el} [%]	Time delay for tripping the alternator circuit breaker [sec]
$P_{el} < 3$	30
$3 \leq P_{el} < 8$	3 to 10
$P_{el} \geq 8$	1.5

Table 31: Adjusting the reverse power relay

2.13.5 Earthing measures of diesel engines and bearing insulation on alternators

General

The use of electrical equipment on diesel engines requires precautions to be taken for protection against shock current and for equipotential bonding. These measures not only serve as shock protection but also for functional protection of electric and electronic devices (EMC protection, device protection in case of welding, etc.).

Earthing connections on the engine

Threaded bores M12, 20 mm deep, marked with the earthing symbol are provided in the engine foot on both ends of the engine.

It has to be ensured that earthing is carried out immediately after engine set-up. If this cannot be accomplished any other way, at least provisional earthing is to be effected right after engine set-up.

2025-06-16 - 1.0

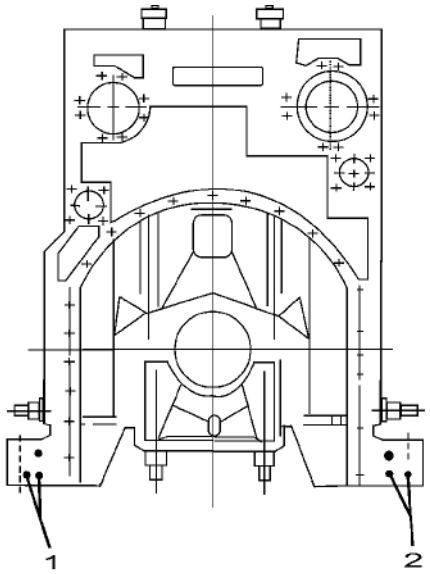

1 Connecting grounding terminal coupling side and engine free end (stamped symbol) M12

2 Connecting grounding terminal coupling side and engine free end (stamped symbol) M12

Figure 31: Earthing connection on engine (are arranged diagonally opposite each)

Measures to be taken on the alternator

Shaft voltages, for example, voltages between the two shaft ends, are generated in electrical machines because of slight magnetic unbalances and ring excitations. In the case of considerable shaft voltages (for example, > 0.3 V), there is the risk that bearing damage occurs due to current transfers. For this reason, at least the bearing that is not located on the drive end is insulated (valid for alternators > 1 MW output). For verification, the voltage available at the shaft (shaft voltage) is measured while the alternator is running and excited. With proper insulation, a voltage can be measured. In order to protect the prime mover and to divert electrostatic charging, an earthing brush is often fitted on the coupling side.

Observation of the required measures is the alternator manufacturer's responsibility.

Consequences of inadequate bearing insulation on the alternator and insulation check

In case the bearing insulation is inadequate, for example, if the bearing insulation was short-circuited by a measuring lead (PT100, vibration sensor), leakage currents may occur, which result in the destruction of the bearings. One possibility to check the insulation with the alternator at standstill (prior to coupling the alternator to the engine; this, however, is only possible in the case of single-bearing alternators) would be:

- Raise the alternator rotor (insulated, in the crane) on the coupling side.
- Measure the insulation by the megger test against earth.

Note:
Hereby the max. voltage permitted by the alternator manufacturer is to be observed.

2025-06-16 - 1.0

If the shaft voltage of the alternator at rated speed and rated voltage is known (for example, from the test record of the alternator acceptance test), it is also possible to carry out a comparative measurement.

If the measured shaft voltage is lower than the result of the “earlier measurement” (test record), the alternator manufacturer should be consulted.

Earthing conductor

The nominal cross section of the earthing conductor (equipotential bonding conductor) has to be selected in accordance with DIN VDE 0100, part 540 (up to 1 kV) or DIN VDE 0141 (in excess of 1 kV).

Generally, the following applies:

The protective conductor to be assigned to the largest main conductor is to be taken as a basis for sizing the cross sections of the equipotential bonding conductors.

Earthing conductors have to be provided at two diagonally opposite points of engine.

Flexible conductors have to be used for the connection of resiliently mounted engines.

Execution of earthing

The earthing must be executed by the shipyard, since generally it is not scope of supply of MAN Energy Solutions.

Earthing strips are also not included in the MAN Energy Solutions scope of supply.

Additional information regarding the use of welding equipment

In order to prevent damage on electrical components, it is imperative to earth welding equipment close to the welding area, that is, the distance between the welding electrode and the earthing connection should not exceed 10 m.

2.14 Propeller operation, suction dredger (pump drive)

2.14.1 General remark for operating ranges

Be advised that engines with several operational demands, always the stricter limitations need to be applied and is valid for all operational tasks.

E.g. mechanical dredger applications need to be classified in following manner:

- Engine only dredge pump drive.

  Operating range for pump drive valid.
- Engine driving dredge pump and on counter side a fixed pitch propeller.

  Operating range for fixed pitch propeller valid.
- Engine driving dredge pump and on counter side a controllable pitch propeller.

  Operating range for pump drive valid.
- Engine driving dredge pump and on counter side a controllable pitch propeller and a small generator.

  Operating range for pump drive valid.

2025-06-16 - 1.0

2.14.2 Operating range for controllable pitch propeller (CPP)

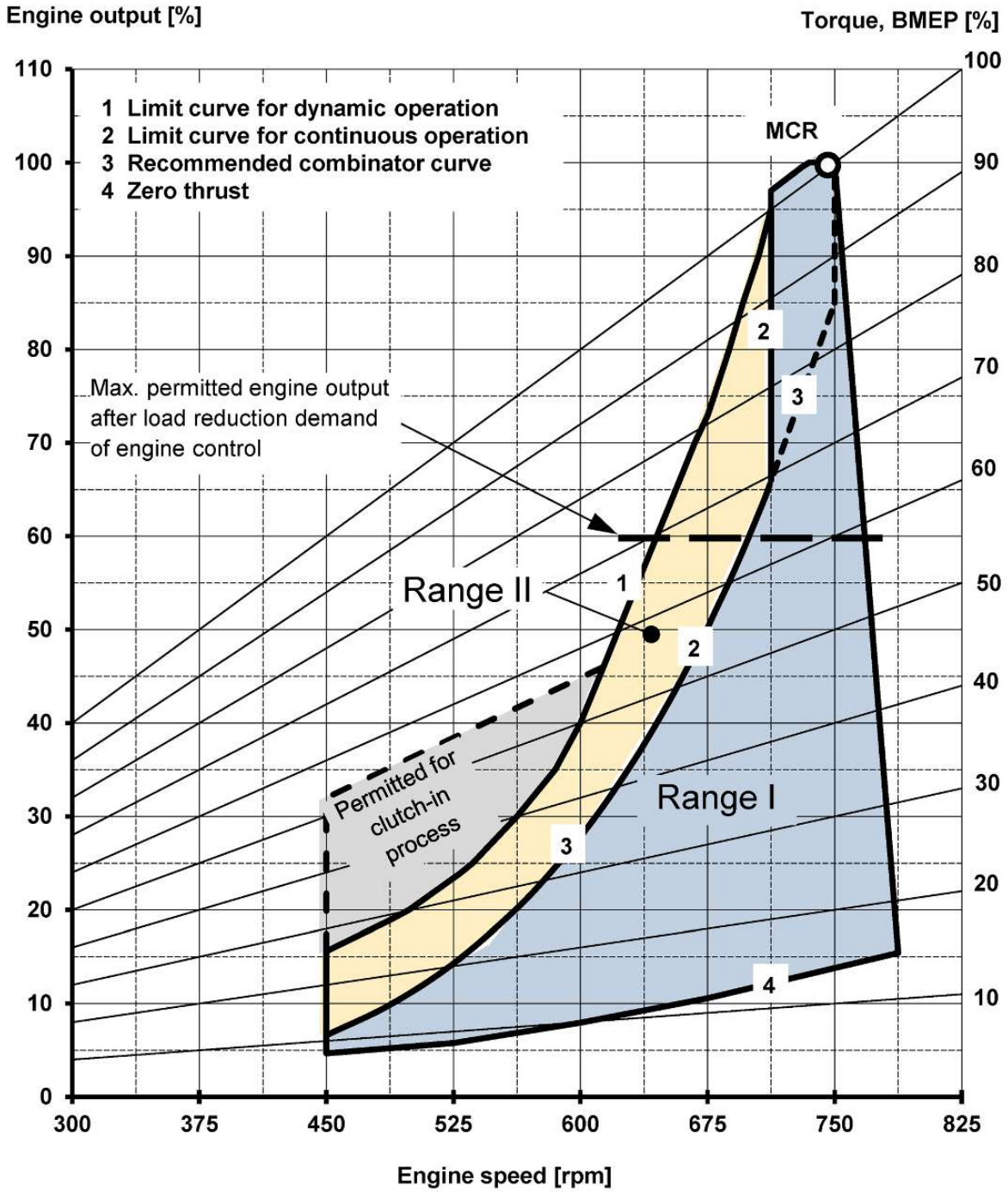

Figure 32: Operating range for controllable pitch propeller

Note:
In rare occasions it might be necessary that certain engine speed intervals have to be barred for continuous operation.
For FPP applications as well as for applications using resiliently mounted en-

2025-06-16 - 1.0

gines, the admissible engine speed range has to be confirmed (preferably at an early project phase) by a torsional vibration calculation, by a dimensioning of the resilient mounting, and, if necessary, by an engine operational vibration calculation.

MCR = Maximum continuous rating

Range I: Operating range for continuous operation.

Note:

Operation at higher power or lower speed than limited by the "limit curve for continuous operation" is only permitted for less than 1 minute.

Range II: Operating range which is temporarily (less than 1 minute) admissible e.g. during acceleration and manoeuvring.

The combinator curve must be placed at a sufficient distance to the load limit curve. For overload protection, a load control has to be provided.

Transmission losses (e.g. by gearboxes and shaft power) and additional power requirements (e.g. by PTO) must be taken into account.

IMO certification for engines with operating range for controllable pitch propeller (CPP)

Test cycle type E2 will be applied for the engine´s certification for compliance with the NO_x limits according to NO_x technical code.

2025-06-16 - 1.0

Engine speed [rpm]	Limit curve dynamic operation [1]	Limit curve continuos operation [2]	Recommended combinator curve [3]
	Engine output [%]		
450	15,6	6,6	6,6
488	18,9	9,9	9,9
499	20,0	11,2	11,2
525	23,5	14,3	14,3
536	25,0	15,9	15,9
563	30,0	20,2	20,2
587	36,0	25,0	25,0
600	40,0	27,9	27,9
611	45,0	30,6	30,6
623	50,0	33,5	33,5
634	55,0	36,6	36,6
645	60,0	40,0	40,0
656	65,0	43,6	43,6
668	70,0	47,5	47,5
675	72,9	50,2	50,2
679	75,0	51,7	51,7
688	80,0	55,1	55,1
696	85,0	58,5	58,5
705	90,0	62,4	62,4
713	95,0	65,8	65,8
713	97,0	97,0	65,8
731	99,6	99,6	74,9
735	100,0	100,0	76,8
750	100,0	100,0	85,0
750	100,0	100,0	100,0

Figure 33: Limit curve values, recommended combinator curve , CPP

2.14.3 General requirements for the CPP propulsion control

Pitch control of the propeller plant

General

A distinction between constant-speed operation and combinator-curve operation has to be ensured.

Failure of propeller pitch control:

In order to avoid overloading of the engine upon failure of the propeller pitch control, the propeller pitch must be adjusted to a value < 60 % of the maximum possible pitch.

4 – 20 mA load indication from engine control

As a load indication a 4 – 20 mA signal from the engine control is supplied to the propeller control.

Combinator-curve operation:

2025-06-16 - 1.0

The 4 – 20 mA signal has to be used for the assignment of the propeller pitch to the respective engine speed. The operation curve of engine speed and propeller pitch (for power range, see section Operating range for controllable pitch propeller (CPP), Page 84) has to be observed also during acceleration/load increase and unloading.

Acceleration/load increase

The engine speed has to be increased prior to increasing the propeller pitch (see figure Example to illustrate the change from one load step to another, Page 88).

When increasing propeller pitch and engine speed synchronously, the speed has to be increased faster than the propeller pitch.

The engine should not be operated in the area above the combinator curve (Range II in figure Operating range for controllable pitch propeller, Page 84).

Automatic limitation of the rate of load increase must be implemented in the propulsion control.

Deceleration/unloading the engine

The engine speed has to be reduced later than the propeller pitch (see figure Example to illustrate the change from one load step to another, Page 88).

When decreasing propeller pitch and engine speed synchronously, the propeller pitch has to be decreased faster than the speed.

2025-06-16 - 1.0

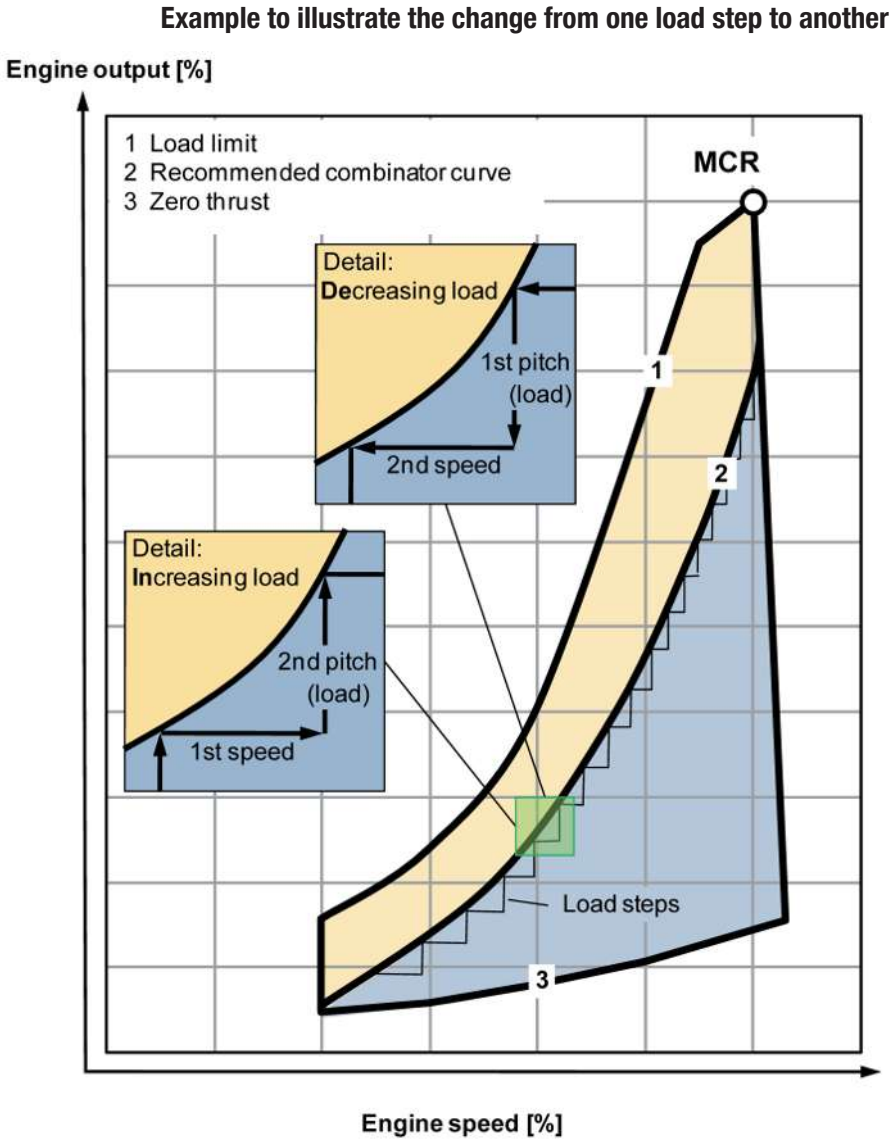

Figure 34: Example to illustrate the change from one load step to another

Windmilling protection

If a stopped engine (fuel admission at zero) is being turned by the propeller, this is called “windmilling”. The permissible period for windmilling is short, because windmilling can cause excessive wear of the engine bearings, due to poor lubrication at low propeller speed.

Single-screw ship

The propeller control has to ensure that the windmilling time is less than 40 seconds.

Multiple-screw ship

The propeller control has to ensure that the windmilling time is less than 40 seconds. In case of plants without shifting clutch, it has to be ensured that a stopped engine cannot be turned by the propeller.

For maintenance work a shaft interlock has to be provided for each propeller shaft.

2025-06-16 - 1.0

Binary signals from engine control

Overload contact

The overload contact will be activated when the engine's fuel admission reaches the maximum position. At this position, the control system has to stop the increase of the propeller pitch. If this signal remains longer than the predetermined time limit, the propeller pitch has to be decreased.

Contact "Operation close to the limit curve"

This contact is activated when the engine is operated close to a limit curve (torque limiter, charge air pressure limiter, etc.). When the contact is activated, the control system has to stop the increase of the propeller pitch. If this signal remains longer than the predetermined time limit, the propeller pitch has to be decreased.

Propeller pitch reduction contact

This contact is activated when disturbances in engine operation occur, for example too high exhaust gas mean-value deviation. When the contact is activated, the propeller control system has to reduce the propeller pitch to 60% of the rated engine output, without change in engine speed.

In section Engine load reduction as a protective safety measure, Page 72 the requirements for the response time are stated.

Distinction between normal manoeuvre and emergency manoeuvre

The propeller control system has to be able to distinguish between normal manoeuvre and emergency manoeuvre (i.e., two different acceleration curves are necessary).

MAN Energy Solutions' guidelines concerning acceleration times and power range have to be observed

The power range (see section Operating range for controllable pitch propeller (CPP), Page 84) and the acceleration times (see paragraph Acceleration times, Page 65) have to be observed. In section Engine load reduction as a protective safety measure, Page 72 the requirements for the response time are stated.

2025-06-16 - 1.0

2.14.4 Operating range for fixed pitch propeller (FPP)

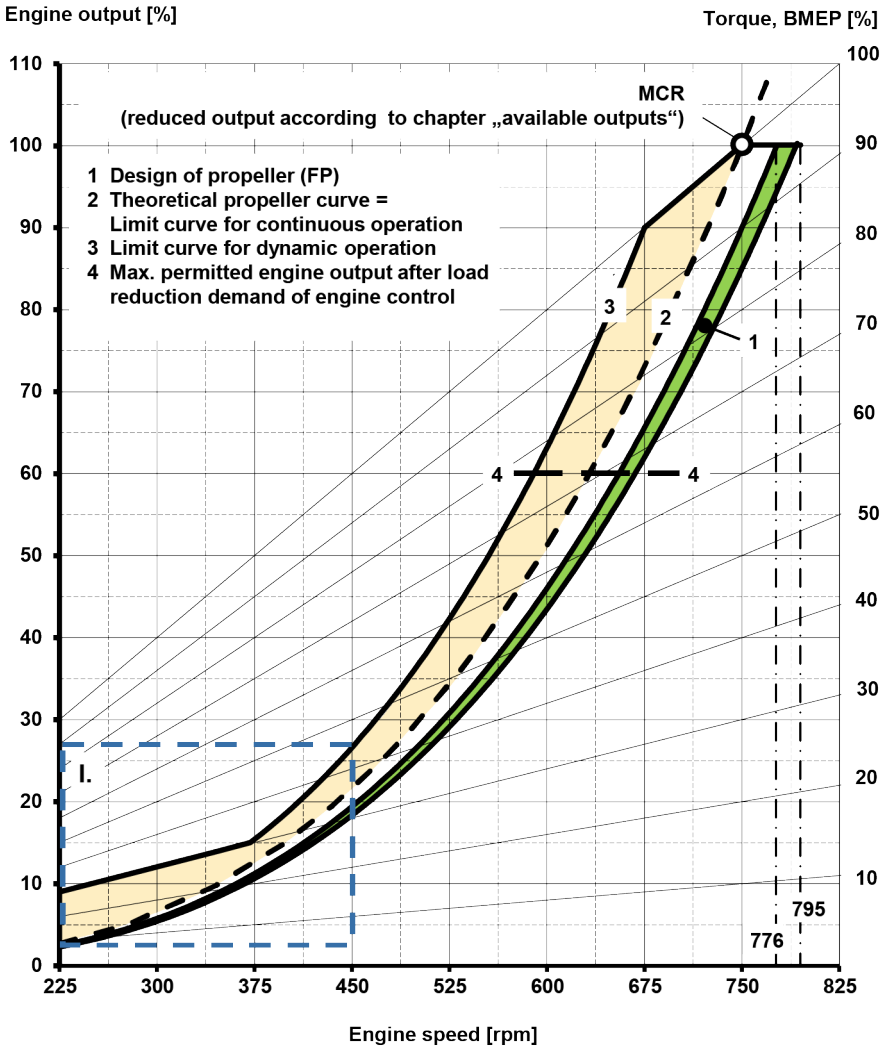

Figure 35: Operating range for fixed pitch propeller

For further information about reduced output see section Available outputs and permissible frequency deviations, Page 78.

Note:
In rare occasions it might be necessary that certain engine speed intervals have to be barred for continuous operation.
For FPP applications as well as for applications using resiliently mounted engines, the admissible engine speed range has to be confirmed (preferably at an early project phase) by a torsional vibration calculation, by a dimensioning of the resilient mounting, and, if necessary, by an engine operational vibration calculation.

- Maximum continuous rating (MCR), fuel stop power

Note:

Operation at higher power or lower speed than limited by the "limit curve for continuous operation" is only permitted for less than 1 minute.

2025-06-16 - 1.0

1 Design of propeller (FP)
A new propeller must be designed to be operated within this range. Boundary conditions for the design are clean hull, calm weather, propeller light running inter alia.

2 Theoretical propeller curve = Limit curve for continuous operation
This limit curve for continuous operation must not be exceeded even under boundary conditions as fouled hull, heavy weather or propeller heavy running.

3 Limit curve for dyn. operation
This limit curve for dynamic operation must not be exceeded at all.

4 Maximum permitted engine output after load reduction demand of engine control is 60%.

Within the section Load application for mechanical propulsion (FPP and CPP), Page 65 acceleration times for fixed pitch propeller plants are stated. Pay attention to the note regarding consideration of a shaft brake.

Note:
Engine operation in a speed range between 103 % and 106 % is permissible for maximum 1 hour!
The propeller design depends on type and application of the vessel. Therefore the determination of the installed propulsive power in the ship is always the exclusive responsibility of the yard.
Determining the engine power: The energy demand or the energy losses from all at the engine additionally attached aggregates has to be considered (e. g. shaft alternators, gearboxes). That means, after deduction of their energy demand from the engine power the remaining engine power must be sufficient for the required propulsion power.

Note:
Type testing of the engines is carried out at 110% rated output and 103% rated engine speed.

But operation with output > 100% only permissible at sea trial for approval of classification society, not for normal operation.

I. External HT cooling water support pump and external lubrication support pump need to be activated within a certain speed range. See section Engine speeds and related main data, Page 51.

IMO certification for engines with operating range for fixed pitch propeller (FPP)

Test cycle type E3 will be applied for the engine´s certification for compliance with the NO_x limits according to NO_x technical code.

2025-06-16 - 1.0

Engine speed [rpm]	Limit curve dynamic operation	Limit curve continuos operation (Theoretical propeller curve)
	Engine output [%]	
225	9,0	2,7
278	11,0	5,1
345	14,0	9,7
398	18,0	14,9
435	24,0	19,5
473	31,0	25,0
495	35,0	28,7
533	44,3	35,8
548	48,0	38,9
578	56,6	45,7
593	61,0	49,3
615	68,0	55,1
630	73,0	59,3
653	81,5	65,9
668	87,0	70,5
675	90,0	72,9
724	97,0	90,0
730	97,0	92,1
735	98,0	94,0
737	98,0	95,0
740	99,0	96,0
745	99,0	98,0
748	100,0	99,0
750	100,0	100,0

Figure 36: Limit curve values, FPP

2.14.5 General requirements for the FPP propulsion control

In accordance to IACS “Requirements concerning MACHINERY INSTALLATIONS”, M43, a single control device for each independent propeller has to be provided, with automatic performance preventing overload and prolonged running in critical speed ranges of the propelling machinery.

Operation of the engine according to the stated FPP operating range has to be ensured.

Load control of the propeller plant

As a load indication a 4–20 mA signal from the engines safety and control system is supplied to the propeller control system.

Windmilling protection

If a stopped engine (fuel admission at zero) is being turned by the propeller, this is called “windmilling”. The permissible period for windmilling is short, because windmilling can cause, due to poor lubrication at low propeller speed, excessive wear of the engine bearings.

2025-06-16 - 1.0

In case of risk that windmilling can appear for a longer period than 40 sec, the engine has to be protected by opening the clutch of the gearbox or/and a shaft breaking system activation at the propeller shaft by the propulsion control system.

For maintenance work a shaft interlock has to be provided for each propeller shaft.

Binary signals from engine control (SaCoS)

Overload contact

The overload contact will be activated when the fuel admission reaches the maximum position.

The propeller control has to reduce the rpm setpoint until contact will be deactivated again.

Reduction contact

This contact is activated when disturbances in engine operation occur, for example too high exhaust gas mean-value deviation. When the contact is activated, the propeller control system has to reduce the output demand to below 60% of the nominal output of the engine.

In section Engine load reduction as a protective safety measure, Page 72 the requirements for the response time are stated.

Operation close to the limit curves

This contact is activated when the engine is operated close to a limit curve (torque limiter, charge air pressure limiter...). When the contact is activated, the propeller control system has to pause with an increase of a load demand. In case the signal remains longer than the predetermined time limit, the output demand needs to be reduced.

Binary signals to engine control (SaCoS) from ECR or bridge

Override (binary signal by switch)

In case “Override” has been activated, “Stop” or “Reduce” demands of engine safety system will not be excecuted, but printed at the alarm printer.

Binary signals to engine control (SaCoS) from coupling control

Activation of clutch

To enable engine control (SaCoS) to act at the begnning of the clutch-in procedure a binary signal has to be provided.

2025-06-16 - 1.0

2.14.6 Operating range for mechanical pump drive

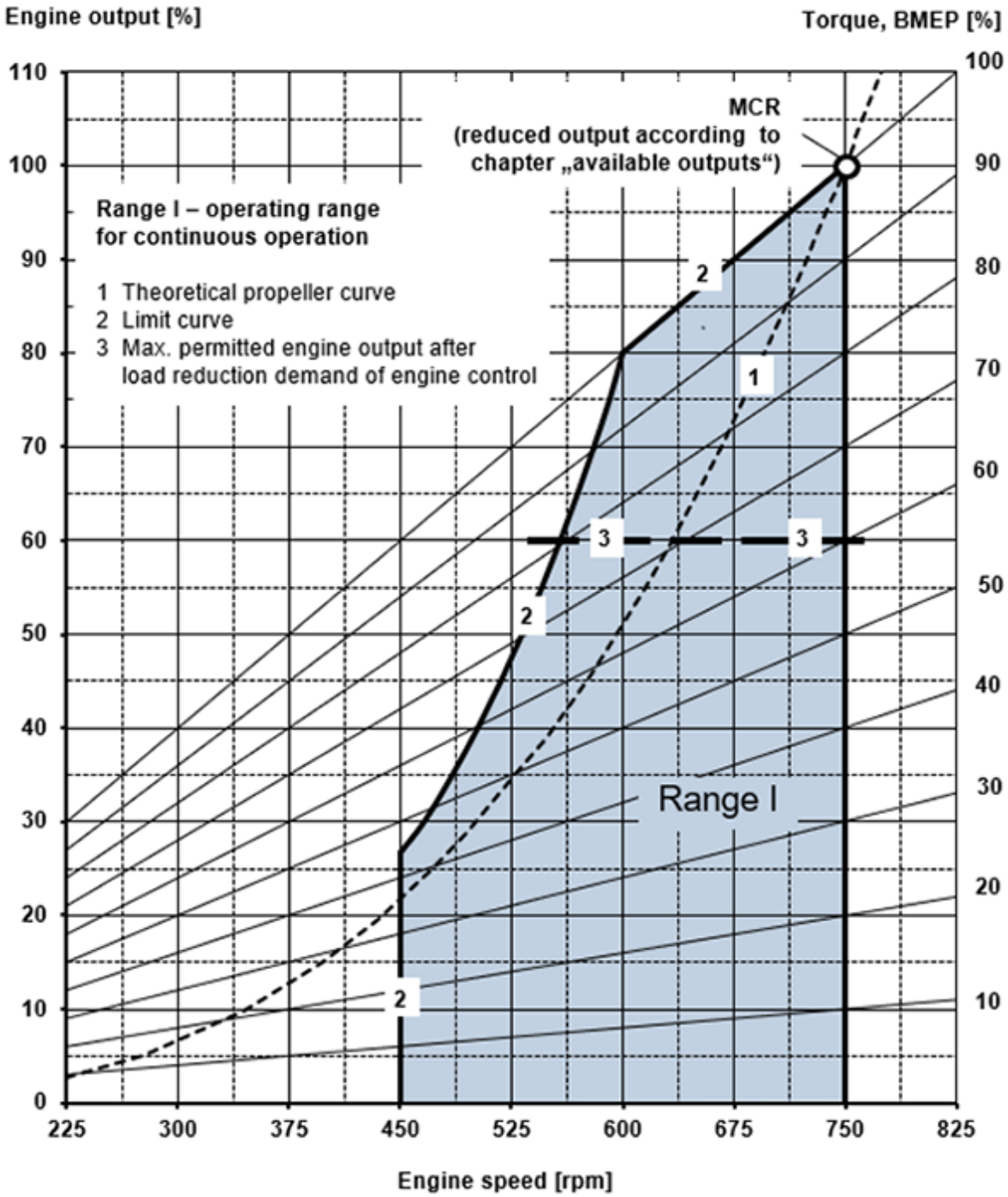

Figure 37: Operating range for mechanical pump drive

- MCR
  Maximum continuous rating, fuel stop power
- Range I

2025-06-16 - 1.0

Operating range for continuous operation

- For dredge applications with dredge pumps directly mechanically driven by the engines there is a requirement for full constant torque operation between 80% and 100% of nominal engine speed. This specific operating range results in a reduced output of the engine according to table Available outputs/related reference conditions, Page 49.

IMO certification for engines with operating range for mechanical pump drive

Test cycle type C1 for auxiliary engine application will be applied for the engine´s certification for compliance with the NO_x limits according to NO_x technical code.

Engine speed [rpm]	Limit curve Engine output [%]
450	26,6
466	30,0
485	35,0
502	40,0
518	45,0
532	50,0
546	55,0
558	60,0
570	65,0
581	70,0
591	75,0
600	80,0
625	83,3
650	86,7
675	90,0
700	93,3
725	96,7
750	100,0

Figure 38: Limit curve values, mechanical pump drive

2025-06-16 - 1.0

2.15 Fuel oil, urea, lube oil, starting air and control air consumption

2.15.1 Fuel oil consumption for emission standard: IMO Tier III

Note:
The engine's certification for compliance with the NO_x limits according to NO_x technical code will be done within the scope of supply of the factory acceptance test as member or parent engine for IMO Tier II without SCR installation. Accordingly the stated figures for the fuel oil consumption are without SCR installation.

The impact of the SCR installation on the fuel oil consumption depends on the plant layout and ambient conditions (see paragraph Additions to fuel consumption, Page 98).

Engine 32/40CD TCF – Auxiliary GenSet

500 kW/cyl., 720 rpm or 500 kW/cyl., 750 rpm

		L engine					V engine				
% Output		**100**	**85[1)]**	**75**	**50**	**25**	**100**	**85[1)]**	**75**	**50**	**25**
Spec. fuel consumption (g/kWh) with HFO or MDO (DMB) without attached pumps[2) 3) 4)]	750 rpm: 720 rpm:	191 191	187 187	186 185	189 187.5	208 205	189 189	185 185	184 183	187 185.5	206 203
Spec. fuel consumption (g/kWh) with MGO (DMA) without attached pumps[2) 3) 4)]	750 rpm: 720 rpm:	192 192	187.5 187.5	186.5 185.5	189 187.5	208 205	190 190	185.5 185.5	184.5 183.5	187 185.5	206 203

[1)] Warranted fuel consumption at 85% MCR.

[2)] Tolerance +5%.

Note: The additions to fuel consumption must be considered before the tolerance for warranty is taken into account. For consideration of fuel leakage amount please consider table Leak rate – MAN 32/40 with SP injection pumps, Page 159.

[3)] Based on reference conditions, see table Reference conditions for fuel consumption, Page 100.

[4)] Relevant for engine´s certification for compliance with the NO_x limits according D2 test cycle.

Table 32: Fuel oil consumption 32/40CD TCF – Auxiliary GenSet

Engine 32/40CD TCF – Electric propulsion (n = const.)

500 kW/cyl., 720 rpm or 500 kW/cyl., 750 rpm

		L engine					V engine				
% Output		**100**	**85[1)]**	**75**	**50**	**25**	**100**	**85[1)]**	**75**	**50**	**25**
Spec. fuel consumption (g/kWh) with HFO or MDO (DMB) without attached pumps[2) 3) 4)]	750 rpm: 720 rpm:	191 191	187 187	186 185	189 187.5	208 205	189 189	185 185	184 183	187 185.5	206 203
Spec. fuel consumption (g/kWh) with MGO (DMA) without attached pumps[2) 3) 4)]	750 rpm: 720 rpm:	192 192	187.5 187.5	186.5 185.5	189 187.5	208 205	190 190	185.5 185.5	184.5 183.5	187 185.5	206 203

2025-06-16 - 1.0

	L engine					V engine				
% Output	**100**	**85[1)]**	**75**	**50**	**25**	**100**	**85[1)]**	**75**	**50**	**25**

[1)] Warranted fuel consumption at 85% MCR.

[2)] Tolerance +5%.

Note: The additions to fuel consumption must be considered before the tolerance for warranty is taken into account. For consideration of fuel leakage amount please consider table Leak rate – MAN 32/40 with SP injection pumps, Page 159.

[3)] Based on reference conditions, see table Reference conditions for fuel consumption, Page 100.

[4)] Relevant for engine´s certification for compliance with the NO_x limits according D2 test cycle.

Table 33: Fuel oil consumption 32/40CD TCF – Electric propulsion (n = const.)

Engine 32/40CD TCF – Mechanical propulsion with controllable pitch propeller (CPP)

500 kW/cyl., 750 rpm

	Spec. fuel consumption [g/kWh] without attached pumps, L/V engine[2) 3) 4)]				
% Output	**100**	**85[1)]**	**75**	**50**	**25**
Speed	**Constant = 750 rpm**				
HFO ord MDO (DMB)	L: 189.5 V: 187.5	L: 186 V: 184	L: 185 V: 183	L: 188 V: 186	L: 206 V: 204
MGO (DMA)	L: 190.5 V: 188.5	L: 186.5 V: 184.5	L: 185.5 V: 183.5	L: 188 V: 186	L: 206 V: 204
Speeds according recommended combinator curve (±5 rpm)	750 rpm	750 rpm	731 rpm	674 rpm	587 rpm
HFO ord MDO (DMB)	L: 189.5 V: 187.5	L: 186 V: 184	L: 183.5 V: 181.5	L: 184 V: 182	L: 193 V: 191
MGO (DMA)	L: 190.5 V: 188.5	L: 186.5 V: 184.5	L: 184 V: 182	L: 184 V: 182	L: 193 V: 191

[1)] Warranted fuel consumption at 85% MCR.

[2)] Tolerance +5%.

Note: The additions to fuel consumption must be considered before the tolerance for warranty is taken into account. For consideration of fuel leakage amount please consider table Leak rate – MAN 32/40 with SP injection pumps, Page 159.

[3)] Based on reference conditions, see table Reference conditions for fuel consumption, Page 100.

[4)] Due to engine´s certification for compliance with the NO_x limits according E2 (test cycle for "constant-speed main propulsion application" including electric propulsion and all controllable pitch propeller installations) factory acceptance test will be done with constant speed only.

Table 34: Fuel oil consumption 32/40CD TCF – Mechanical propulsion with controllable pitch propeller (CPP)

Engine 32/40CD TCF – Mechanical propulsion with fixed pitch propeller (FPP)

450 kW/cyl., 750 rpm

2025-06-16 - 1.0

	L engine					V engine				
% Output	**100**	**85[1)]**	**75**	**50**	**25**	**100**	**85[1)]**	**75**	**50**	**25**
Speed (rpm)	**750**	**710**	**681 (IMO: 683)**	**595 (IMO: 600)**	**473**	**750**	**710**	**681 (IMO: 683)**	**595 (IMO: 600)**	**473**
Spec. fuel consumption (g/kWh) with HFO or MDO (DMB) without attached pumps[2) 3) 4)]	192	187.5	185.5	186	194	190	185.5	183.5	184	192
Spec. fuel consumption (g/kWh) with MGO (DMA) without attached pumps[2) 3) 4)]	193	188	186	186	194	191	186	184	184	192

[1)] Warranted fuel consumption at 85% MCR.

[2)] Tolerance +5%.

Note: The additions to fuel consumption must be considered before the tolerance for warranty is taken into account. For consideration of fuel leakage amount please consider table Leak rate – MAN 32/40 with SP injection pumps, Page 159.

[3)] Based on reference conditions, see table Reference conditions for fuel consumption, Page 100.

[4)] Relevant for engine´s certification for compliance with the NO_x limits according E3 test cycle.

Table 35: Fuel oil consumption 32/40CD TCF – Mechanical propulsion with fixed pitch propeller (FPP)

Engine 32/40CD TCF – Suction dredger/pumps (mechanical drive)

450 kW/cyl., 750 rpm

	L engine					V engine				
% Output	**100**	**85[1)]**	**75**	**50**	**25**	**100**	**85[1)]**	**75**	**50**	**25**
Speed	**Constant = 750 rpm**									
Spec. fuel consumption (g/kWh) with HFO or MDO (DMB) without attached pumps[2) 3) 4)]	192	190	189.5	194	213	190	188	187.5	192	211
Spec. fuel consumption (g/kWh) with MGO (DMA) without attached pumps[2) 3) 4)]	193	190.5	190	194	213	191	188.5	188	192	211

[1)] Warranted fuel consumption at 85% MCR.

[2)] Tolerance +5%.

Note: The additions to fuel consumption must be considered before the tolerance for warranty is taken into account. For consideration of fuel leakage amount please consider table Leak rate – MAN 32/40 with SP injection pumps, Page 159.

[3)] Based on reference conditions, see table Reference conditions for fuel consumption, Page 100.

[4)] Clarification required on early project stage if engine´s certification for compliance with the NO_x limits needs to be done according C1 test cycle.

Table 36: Fuel oil consumption 32/40CD TCF – Suction dredger/pumps (mechanical drive)

Additions to fuel consumption

1. Engine driven pumps increase the fuel consumption by:

2025-06-16 - 1.0

$$be_{42700,\ ISO\ with\ pumps} = be_{42700,\ ISO\ without\ pumps} \times (1 + f_{pumps})$$

$$f_{pumps} = (f_{HT\ pumps} + f_{LT\ pumps} + f_{LO\ pumps}) \times \frac{500\ kW/cyl.}{Nominal\ output\ per\ cyl.}$$

For HT CW service pump (attached)[1)]

$$f_{HT\ pumps} = i_{HT\ pumps} \times 0.0028 \times \frac{100\%}{load\%} \times \left(\frac{n_x}{n_n}\right)^3$$

For LT CW service pump (attached)

$$f_{LT\ pumps} = i_{LT\ pumps} \times 0.0034 \times a \times \frac{100\%}{load\%} \times \left(\frac{n_x}{n_n}\right)^3$$

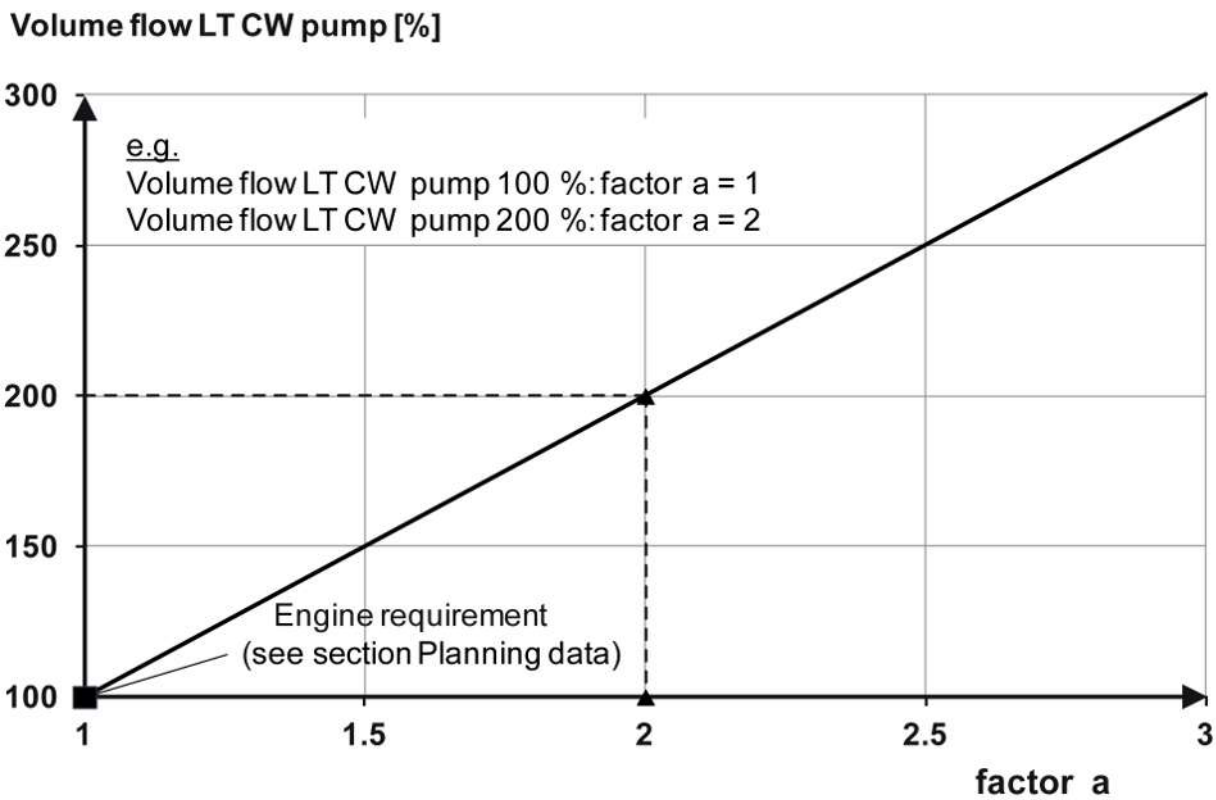

Figure 39: Derivation of factor a

For all lube oil service pumps (attached)[1)]

GenSet, electric propulsion:

$$f_{LO\ pumps} = 0.0150 \times \frac{100\%}{load\%} \times \left(\frac{n_x}{n_n}\right)^1$$

Mechanical propulsion CPP:

2025-06-16 - 1.0

$$f_{LO\ pumps} = 0.0150 \times \frac{100\%}{load\%} \times \left(\frac{n_x}{n_n}\right)^1$$

Mechanical propulsion FPP:

$$f_{LO\ pumps} = 0.0195 \times \frac{100\%}{load\%} \times \left(\frac{n_x}{n_n}\right)^1$$

Mechanical pump drive (dredger):

$$f_{LO\ pumps} = 0.0195 \times \frac{100\%}{load\%} \times \left(\frac{n_x}{n_n}\right)^1$$

f_{pumps}	Actual factor for impact of attached pumps	[-]
$i_{HT\ pumps}$	Number of attached HT cooling water service pumps	[-]
$i_{LT\ pumps}$	Number of attached LT cooling water service pumps	[-]
n_x	Actual engine speed	[rpm]
n_n	Nominal engine speed	[rpm]
load%	Actual engine load	[%]
Nominal output per cylinder	Insert the nominal output per cylinder	[kW/cyl.]

[1)] Note:
For mechanical propulsion with FPP for the operation range up to 60 % nominal speed, a HT CW service support pump (free-standing) and a lube oil service support pump (free-standing) has to be applied (not MAN Energy Solutions scope of supply).

2. For exhaust gas back pressure after turbine > 50 mbar

Every additional 1 mbar (0.1 kPa) back pressure addition of 0.025 g/kWh has to be calculated.

3. For exhaust gas temperature control by adjustable waste gate (SCR)

For every increase of the exhaust gas temperature by 1 °C, due to activation of adjustable waste gate, an addition of 0.07 g/kWh to be calculated.

Fuel oil consumption at idle running

Fuel oil consumption at idle running (kg/h)								
No. of cylinders, config.	**6L**	**7L**	**8L**	**9L**	**12V**	**14V**	**16V**	**18V**
Speed 720/750 rpm	45	52	60	67	90	104	120	134

Table 37: Fuel oil consumption at idle running (only for guidance)

Reference conditions for fuel consumption

According to ISO 15550; ISO 3046-1

Air temperature before turbocharger t_r	K/°C	298/25

2025-06-16 - 1.0

Total atmospheric pressure p_r	kPa	100
Relative humidity Φ_r	%	30
Exhaust gas back pressure after turbocharger[1)]	kPa	5
Engine type specific reference charge air temperature before cylinder t_{bar}[2)]	K/°C	316/43
Temperature control of temperature turbine outlet by adjustable waste gate: Setpoint as minimum temperature for deactivated SCR	K/°C	563/290
Temperature control of temperature turbine outlet by adjustable waste gate for ECOMAP 4 (ECOMAP-SCR): Setpoint as minimum temperature for activated SCR	K/°C	593/320
Net calorific value NCV	kJ/kg	42,700

[1)] Measured at 100% load, accordingly lower for loads < 100%.

[2)] Specified reference charge air temperature corresponds to a mean value for all cylinder numbers that will be achieved with 25°C LT cooling water temperature before charge air cooler (according to ISO).

Table 38: Reference conditions for fuel consumption MAN 32/40CD TCF

IMO Tier II requirements:

For detailed information see section Cooling water system, Page 334.

IMO: International Maritime Organization

MARPOL 73/78; Revised Annex VI-2008, Regulation 13

Tier II: NO_x technical code on control of emission of nitrogen oxides from diesel engines.

2.15.2 Urea consumption for emission standard IMO Tier III

The table below shows indicative the urea consumption values for the reduction from IMO Tier II to IMO Tier III level according to MARPOL Annex VI – Regulation 13 for different engine types. The indicative values are based on aqueous solution having an urea content of 40%, engine type related standard performance map, load point 100% MCR and DMA grade fuel. See also section Specification of urea solution, Page 290.

Speed (rpm)	500/514	600	720/750	800	900	1,000
Urea consumption (g/kWh)	13.5	13.0	13.0	12.5	12.0	11.5

Table 39: Urea consumption

Note:
Urea consumption could be different for engines with specific load point optimisation. For more detailed information on expected level of urea consumption, contact MAN Energy Solutions with your project-specific request.

2.15.3 Lube oil consumption

500 kW/cyl., 720 rpm or 500 kW/cyl., 750 rpm

453 kW/cyl., 720 rpm

450 kW/cyl., 750 rpm

Specific lube oil consumption:

2025-06-16 - 1.0

$$0.5\ \text{g/kWh}^{1)} \times \frac{100\%}{\text{load\%}} \times \frac{500\ \text{kW/cyl.}}{\text{nominal output per cyl.}}$$

Load%	Actual engine load	[%]
Nominal output per cyl.	Insert the nominal output per cyl.	[kW/cyl.]

[1)] The value stated above is without any losses due to cleaning of filter and centrifuge or lube oil charge replacement. Tolerance for warranty +20%.

Example:

For nominal output 500 kW/cyl. and 100% actual engine load: 0.50 g/kWh

For nominal output 453 kW/cyl. and 100% actual engine load: 0.55 g/kWh

For nominal output 450 kW/cyl. and 100% actual engine load: 0.56 g/kWh

2025-06-16 - 1.0

2.15.4 Compressed air consumption – SCR system

Soot blowing and urea injection requires compressed air. Depending on the SCR reactor size the following volumes are permanent and in SCR operation required.

Mixing device	Engine power approximately	Mixing pipe	Permanent air consumption by sootblower	Additional air consumption in SCR operation by urea injection[1) 2)]
No.	kW	DN	Nm^3/h[3)]	Nm^3/h[3)]
1	0–1,000	500	3	9
2	1,001–2,000	600	3	12
3	2,001–3,000	800	3	23
4	3,001–4,200	1,000	3	37
5	4,201–5,400	1,100	3	46
6	5,401–6,800	1,200	3	50
7	6,801–8,500	1,400	4	64
8	8,501–10,500	1,500	4	90
9	10,501–13,000	1,600	4	112
10	13,001–20,000	2,100	5	140
11	20,001–21,600	2,300	5	210

[1)] Starting and shutdown of the SCR system can result in short-term higher compressed air consumption caused by cooling and scavenging phases.

[2)] Tolerance: Quantity +10%.

[3)] Nm^3 corresponds to one cubic metre of gas at 20°C and 100.0 kPa abs.

Table 40: Compressed air consumption – SCR system

2.15.5 Starting air and control air consumption

No. of cylinders, config.		6L	7L	8L	9L	12V	14V	16V	18V
Control air consumption	Nm^3/h[1)]	2.5							
Air consumption at minimum moment of inertia[2)]									
Air consumption per start	Nm^3 [1)]	2.2	1.8	2.0	2.3	2.4	2.5	2.4	2.5
Air consumption per slow turn without subsequent start[3)]	Nm^3 [1)]	2.2	1.8	2.0	2.3	2.4	2.5	2.4	2.6
Reference moment of inertia for stated air consumption figures	kgm^2	1,123	1,198	1,246	1,265	1,472	1,561	1,648	1,737
Air consumption at high moment of inertia[2)]									
Air consumption per start	Nm^3 [1)]	2.9	2.6	3.2	4.0	4.8	5.5	5.7	6.3
Air consumption per slow turn without subsequent start[3)]	Nm^3 [1)]	2.9	2.6	3.2	4.0	4.8	5.5	5.7	6.3

2025-06-16 - 1.0

No. of cylinders, config.		6L	7L	8L	9L	12V	14V	16V	18V
Reference moment of inertia for stated air consumption figures	kgm^2	1,475	1,720	1,966	2,212	2,949	3,440	3,932	4,423
Starting system active in case of start[4)]	sec	5.0							
Starting system active in case of slow turn **without** subsequent start[4)]	sec	15.0							
Air consumption per jet assist activation[5)]	Nm^3 [1)]	1.85	1.85	2.95	2.95	3.75	3.75	5.95	5.95
Air consumption jet assist in case of emergency loading[6)]	Nm^3 [1)]	To be considered: 20 jet assist activations during loading from 0% to 100% load							

[1)] Nm^3 corresponds to one cubic metre of gas at 20°C and 100.0 kPa abs.

[2)] The air consumption per starting manoeuvre/slow turn of the unit (e.g. engine plus alternator) increases in relation to its total moment of inertia. Linear interpolation must be carried out between the stated figures to gain the relevant air consumption figures for the unit within the plant based on its total moment of inertia at start. Consider also the "Required minimum total moments of inertia" as stated within table Moments of inertia for marine main engines – Crankshaft, damper, flywheel, Page 181.

[3)] Required for plants with power management system demanding automatic engine start. Slow turn will be activated only after a long period of engine standstill. This value states the air consumption for slow turn manoeuvre only, without the air consumption for the automatically activated engine start after the end of the slow turn manoeuvre.

[4)] Stated time duration for activated starting system **only relevant for layout** of starting air system.
For layout of the starting air system, note:

- Starting air pressure stated within section Operating/service temperatures and pressures, Page 152.
- Maximum velocity (m/s) see section External pipe dimensioning, Page 294.
- Consider multiple start of engines and the temporal distribution of events, if needed.
- See section External compressed air system – Dimensioning starting air receivers, compressors, Page 401.

[5)] The mentioned above air consumption per jet assist activation is valid for a jet duration of 5 seconds. The jet duration may vary between 3 sec and 10 sec, depending on the loading (average jet duration 5 sec). See section External compressed air system – Jet assist, Page 403 for the different applications and accordingly needed consideration for the layout.
Note: In the period of the "Normal Start", jet assist **will not** be activated.

[6)] See accordingly section Load application – Load steps (for electric propulsion/auxiliary GenSet), Page 63.

Table 41: Starting air and control air consumption

2.15.6 Recalculation of fuel consumption dependent on ambient conditions

In accordance to ISO standard ISO 3046-1 "*Reciprocating internal combustion engines – Performance, Part 1: Declarations of power, fuel and lube oil consumptions, and test methods – Additional requirements for engines for general use*" MAN Energy Solutions has specified the method for recalculation of fuel consumption for liquid fuel dependent on ambient conditions for single-stage turbocharged engines as follows:

$$\beta = 1 + 0.0006 \times (t_x - t_r) + 0.0004 \times (t_{bax} - t_{bar}) + 0.07 \times (p_r - p_x)$$

2025-06-16 - 1.0

The formula is valid within the following limits:	
Ambient air temperature	5°C–55°C
Charge air temperature before cylinder	25°C–75°C
Ambient air pressure	0.885 bar–1.030 bar

Table 42: Limit values for recalculation of liquid fuel consumption

$$b_x = b_r \times \beta \qquad b_r = \frac{b_x}{\beta}$$

β	Fuel consumption factor
t_{bar}	Engine type specific reference charge air temperature before cylinder see table Reference conditions for fuel consumption, Page 100

	Unit	Reference	At test run or at site
Specific fuel consumption	[g/kWh]	b_r	b_x
Ambient air temperature	[°C]	t_r	t_x
Charge air temperature before cylinder	[°C]	t_{bar}	t_{bax}
Ambient air pressure	[bar]	p_r	p_x

Table 43: Recalculation of liquid fuel consumption – Units and references

Example

Reference values:

b_r = 200 g/kWh, t_r = 25°C, t_{bar} = 40°C, p_r = 1.0 bar

At site:

t_x = 45°C, t_{bax} = 50°C, p_x = 0.9 bar

ß = 1+ 0.0006 (45 – 25) + 0.0004 (50 – 40) + 0.07 (1.0 – 0.9) = 1.023

b_x = ß x b_r = 1.023 x 200 = 204.6 g/kWh

2.15.7 Influence of engine aging on fuel consumption

The fuel oil consumption will increase over the running time of the engine. Timely service can reduce or eliminate this increase. For dependencies see following figure.

2025-06-16 - 1.0

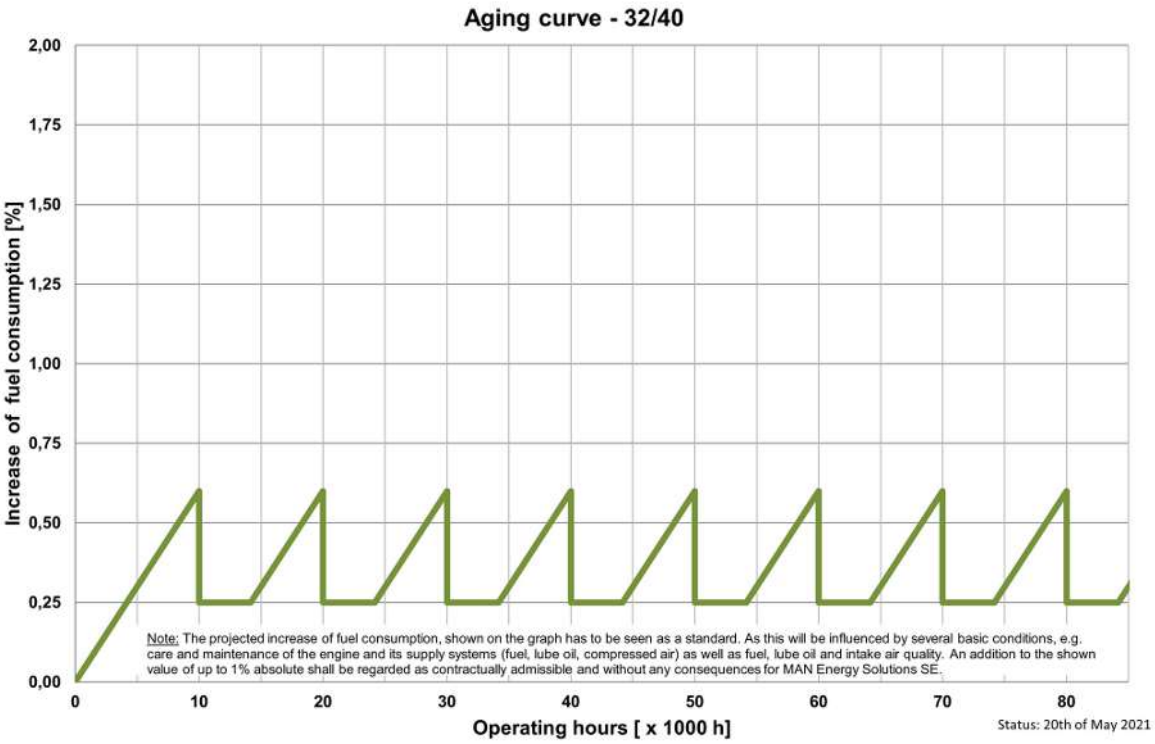

Figure 40: Influence of total engine running time and service intervals on fuel oil consumption

2.16 Service support pumps for lower speed range of FPP applications

Main data – Service support pumps

For fixed pitch propeller (FPP) application for the operating range up to 60 % nominal speed service support pumps (free-standing) have to be applied according to the figures in the table below.

450 kW/cyl., 750 rpm

No. of cylinders	HT CW service support pump (free-standing, Δp 2.5 bar)		Lube oil service support pump (free-standing, Δp 5 bar)	
6L	24	m^3/h	42	m^3/h
7L	28		49	
8L	32		57	
9L	36		57	
12V	47		67	
14V	55		67	
16V	63		79	
18V	71		79	

Table 44: Main data – Service support pumps for FPP applications

2025-06-16 - 1.0

2.17 Planning data for emission standard: IMO Tier II – Auxiliary GenSet

Note:
Stated figures are valid for a layout of the engine supply system as defined within this documentation. Any modifications that affect the media flow from attached pumps to the engine, required media flows, temperatures or pressures need to be agreed on by MAN Energy Solutions.

2.17.1 Nominal values for cooler specification – MAN L32/40CD TCF IMO Tier II – Auxiliary GenSet

500 kW/cyl., 720 rpm or 500 kW/cyl., 750 rpm – Auxiliary GenSet

Reference conditions: Tropics		
Air temperature	°C	45
Cooling water temp. before charge air cooler (LT stage)		38
Total atmospheric pressure	mbar	1,000
Relative humidity	%	60

Table 45: Reference conditions: Tropics

No. of cylinders, config.		**6L**	**7L**	**8L**	**9L**
Engine output	kW	3,000	3,500	4,000	4,500
Speed	rpm	720/750			
Heat to be dissipated[1)]					
Charge air: Charge air cooler (HT stage) Charge air cooler (LT stage)	kW	 917 455	 1,030 527	 1,198 618	 1,307 690
Lube oil cooler[2)]		390	458	521	589
Jacket cooling		440	517	588	665
Nozzle cooling		12	14	16	18
Heat radiation engine (based on engine room temp. 55°C)		66	77	88	99
Flow rates[3)]					
HT circuit (jacket cooling + charge air cooler HT)	m^3/h	36	42	48	54
LT circuit (lube oil cooler + charge air cooler LT)		57	70	74	85
Lube oil		97	108	118	129
Nozzle cooling water		1.0	1.2	1.4	1.6
Pumps					
a) Attached					
HT CW service pump	m^3/h	36	42	48	54
LT CW service pump		57	70	74	85

2025-06-16 - 1.0

No. of cylinders, config.		6L	7L	8L	9L
Lube oil service pump for application with constant speed		120	141	141	162
b) Free-standing[4]					
HT CW stand-by pump	m^3/h	36	42	48	54
LT CW stand-by pump		Depending on plant design			
Lube oil stand-by pump		102+z	113+z	124+z	136+z
Prelubrication pump		19.5–22.5 +0.5z	21.5–25.0 +0.5z	23.5–27.5 +0.5z	25.5–30.0 +0.5z
Nozzle CW pump		1.0	1.2	1.4	1.6
MGO/MDO supply pump		2.3	2.7	3.1	3.4
HFO supply pump		1.2	1.4	1.6	1.8
HFO circulating pump		2.3	2.7	3.1	3.4

[1] Tolerance: +8% for rating coolers and heat radiation, +6% for central (HT-, LT- and lube oil system), -12% for heat recovery from HT- or LT- or lube oil system.

[2] Addition required for separator heat (e.g. 30 kJ/kWh).

[3] Basic values for layout design of the coolers.

[4] Tolerances of the pumps delivery capacities must be considered by the pump manufacturer.

z = flushing oil of the automatic filter.

Table 46: Nominal values for cooler specification – MAN L32/40CD TCF IMO Tier II – Auxiliary GenSet

Note:
You will find further planning data for the listed subjects in the corresponding sections.

- Minimal heating power required for preheating HT cooling water see paragraph HT cooling water preheating module (MOD-004).
- Minimal heating power required for preheating lube oil see paragraph H-002/Lube oil preheater, Page 312.
- Capacities of preheating pumps see paragraph HT cooling water preheating module (MOD-004).

2025-06-16 - 1.0

2.17.2 Nominal values for cooler specification – MAN V32/40CD TCF IMO Tier II – Auxiliary GenSet

500 kW/cyl., 720 rpm or 500 kW/cyl., 750 rpm – Auxiliary GenSet

Reference conditions: Tropics		
Air temperature	°C	45
Cooling water temp. before charge air cooler (LT stage)		38
Total atmospheric pressure	mbar	1,000
Relative humidity	%	60

Table 47: Reference conditions: Tropics

No. of cylinders, config.		**12V**	**14V**	**16V**	**18V**
Engine output	kW	6,000	7,000	8,000	9,000
Speed	rpm	720/750			
Heat to be dissipated[1)]					
Charge air: Charge air cooler (HT stage) Charge air cooler (LT stage)	kW	 1,817 921	 2,040 1,065	 2,371 1,250	 2,588 1,394
Lube oil cooler[2)]		781	917	1,043	1,179
Jacket cooling		881	1,034	1,177	1,330
Nozzle cooling		24	28	32	36
Heat radiation engine (based on engine room temp. 55°C)		131	153	175	197
Flow rates[3)]					
HT circuit (jacket cooling + charge air cooler HT)	m^3/h	72	84	96	108
LT circuit (lube oil cooler + charge air cooler LT)		114	140	148	170
Lube oil		151	163	174	186
Nozzle cooling water		2.0	2.4	2.8	3.2
Pumps					
a) Attached					
HT CW service pump	m^3/h	72	84	96	108
LT CW service pump		114	140	148	170
Lube oil service pump for application with constant speed		162	191	191	191
b) Free-standing[4)]					
HT CW stand-by pump	m^3/h	72	84	96	108
LT CW stand-by pump		Depending on plant design			
Lube oil stand-by pump		159+z	171+z	183+z	195+z
Prelubrication pump		30.0–35.0 +0.5z	32.5–38.0 +0.5z	35.0–41.0 +0.5z	37.5–44.0 +0.5z

2025-06-16 - 1.0

No. of cylinders, config.		12V	14V	16V	18V
Nozzle CW pump		2.0	2.4	2.8	3.2
MGO/MDO supply pump		4.5	5.3	6.0	6.8
HFO supply pump		2.4	2.8	3.2	3.6
HFO circulating pump		4.5	5.3	6.0	6.8

[1] Tolerance: +8% for rating coolers and heat radiation, +6% for central (HT-, LT- and lube oil system), -12% for heat recovery from HT- or LT- or lube oil system.

[2] Addition required for separator heat (e.g. 30 kJ/kWh).

[3] Basic values for layout design of the coolers.

[4] Tolerances of the pumps delivery capacities must be considered by the pump manufacturer.

z = flushing oil of the automatic filter.

Table 48: Nominal values for cooler specification – MAN V32/40CD TCF IMO Tier II – Auxiliary GenSet

Note:
You will find further planning data for the listed subjects in the corresponding sections.

- Minimal heating power required for preheating HT cooling water see paragraph HT cooling water preheating module (MOD-004).
- Minimal heating power required for preheating lube oil see paragraph H-002/Lube oil preheater, Page 312.
- Capacities of preheating pumps see paragraph HT cooling water preheating module (MOD-004).

2025-06-16 - 1.0

2.17.3 Flow scheme for cooler specification – MAN L/V32/40CD TCF IMO Tier II

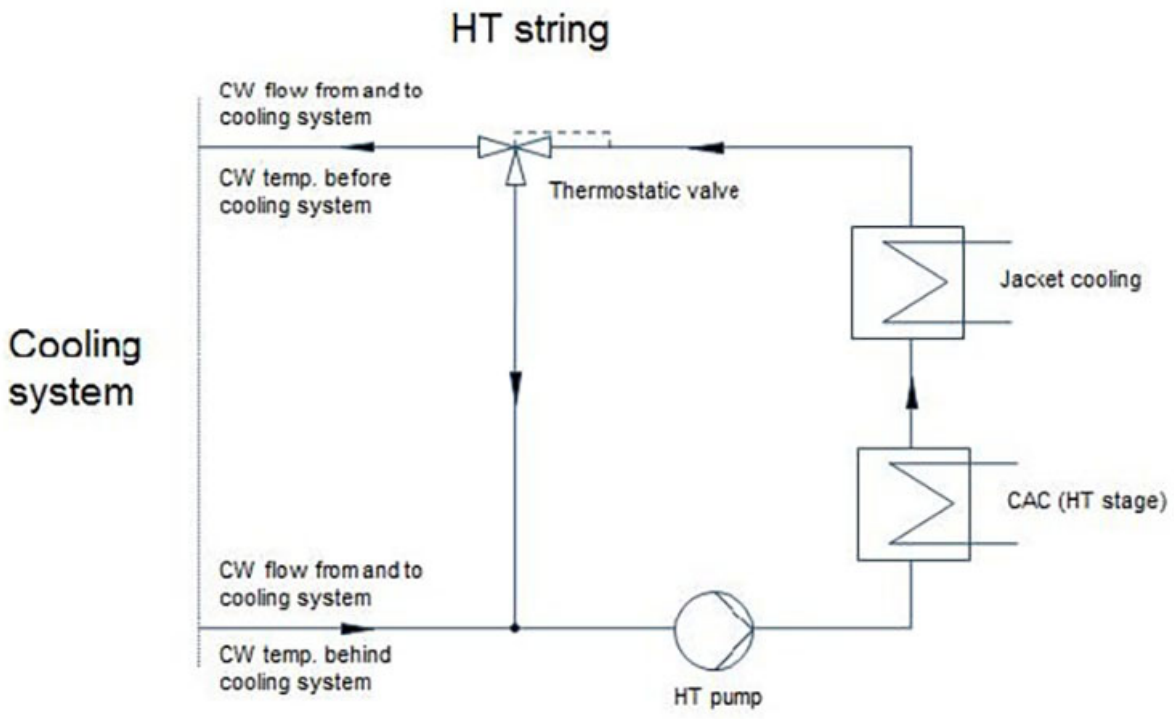

Figure 41: Flow scheme 2-string-HT-thermostat - MAN L/V32/40CD TCF, exemplary

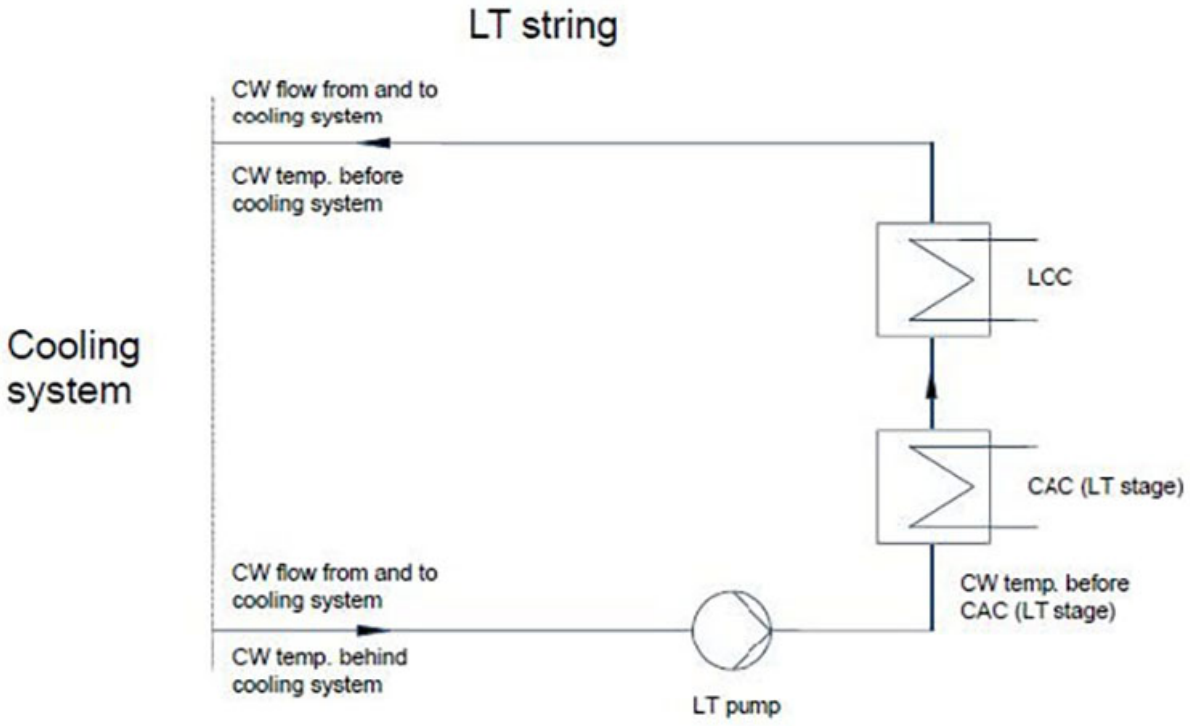

Figure 42: Flow scheme 2-string-LT-thermostat - MAN L/V32/40CD TCF, exemplary

2025-06-16 - 1.0

2.17.4 Temperature basis, nominal air and exhaust gas data – MAN L32/40CD TCF IMO Tier II – Auxiliary GenSet

500 kW/cyl., 720 rpm or 500 kW/cyl., 750 rpm – Auxiliary GenSet

Reference conditions: Tropics		
Air temperature	°C	45
Cooling water temp. before charge air cooler (LT stage)		38
Total atmospheric pressure	mbar	1,000
Relative humidity	%	60

Table 49: Reference conditions: Tropics

No. of cylinders, config.		6L	7L	8L	9L
Engine output	kW	3,000	3,500	4,000	4,500
Speed	rpm	720/750			
Temperature basis					
HT cooling water engine outlet[1]	°C	90			
LT cooling water air cooler inlet		38 (setpoint 32°C)[2]			
Lube oil engine inlet		65			
Nozzle cooling water engine inlet		60			
Air data					
Temperature of charge air at charge air cooler outlet	°C	60.6	61.8	61	61.9
Air flow rate[3]	m^3/h	20,558	23,931	27,393	30,763
Mass flow	t/h	21.2	26.2	30	33.7
Charge air pressure (absolute)	bar abs	4.4			
Air required to dissipate heat radiation (engine) ($t_2 - t_1$ = 10°C)	m^3/h	21,113	24,631	28,150	31,669
Exhaust gas data[4]					
Volume flow (temperature turbocharger outlet)[5]	m^3/h	41,083	47,996	54,800	61,717
Mass flow	t/h	23.1	26.9	30.8	33.7
Temperature at turbine outlet	°C	345	348	346	348
Heat content (190°C)	kW	1,074	1,268	1,437	1,632
Permissible exhaust gas back pressure after turbocharger	mbar	50			

[1] HT cooling water flow first through water jacket and cylinder head, then through HT stage charge air cooler.

[2] For design see figure Cooling water system diagram – Twin engine plant, Page 346.

[3] Under mentioned above reference conditions.

[4] Tolerances (exhaust gas data): ±15°C for temperature at turbine outlet, ±4% for flow quantity.

[5] Calculated based on stated temperature at turbine outlet and total atmospheric pressure according mentioned above reference conditions.

Table 50: Temperature basis, nominal air and exhaust gas data – MAN L32/40CD TCF IMO Tier II – Auxiliary GenSet

2025-06-16 - 1.0

2.17.5 Temperature basis, nominal air and exhaust gas data – MAN V32/40CD TCF IMO Tier II – Auxiliary GenSet

500 kW/cyl., 720 rpm or 500 kW/cyl., 750 rpm – Auxiliary GenSet

Reference conditions: Tropics		
Air temperature	°C	45
Cooling water temp. before charge air cooler (LT stage)		38
Total atmospheric pressure	mbar	1,000
Relative humidity	%	60

Table 51: Reference conditions: Tropics

No. of cylinders, config.		**12V**	**14V**	**16V**	**18V**
Engine output	kW	6,000	7,000	8,000	9,000
Speed	rpm	720/750			
Temperature basis					
HT cooling water engine outlet[1]	°C	90			
LT cooling water air cooler inlet		38 (setpoint 32°C)[2]			
Lube oil engine inlet		65			
Nozzle cooling water engine inlet		60			
Air data					
Temperature of charge air at charge air cooler outlet	°C	61	62	61	62
Air flow rate[3]	m^3/h	41,100	47,850	54,756	61,512
Mass flow	t/h	45	52.4	59.9	67.3
Charge air pressure (absolute)	bar abs	4.4			
Air required to dissipate heat radiation (engine) ($t_2 - t_1$ = 10°C)	m^3/h	42,225	49,263	56,300	63,338
Exhaust gas data[4]					
Volume flow (temperature turbocharger outlet)[5]	m^3/h	82,163	95,977	109,598	123,414
Mass flow	t/h	46.2	53.8	61.6	69.2
Temperature at turbine outlet	°C	346	348	347	348
Heat content (190°C)	kW	2,151	2,538	2,880	3,266
Permissible exhaust gas back pressure after turbocharger	mbar	50			

[1] HT cooling water flow first through water jacket and cylinder head, then through HT stage charge air cooler.

[2] For design see figure Cooling water system diagram – Twin engine plant, Page 346.

[3] Under mentioned above reference conditions.

[4] Tolerances (exhaust gas data): ±15°C for temperature at turbine outlet, ±4% for flow quantity.

[5] Calculated based on stated temperature at turbine outlet and total atmospheric pressure according mentioned above reference conditions.

Table 52: Temperature basis, nominal air and exhaust gas data – MAN V32/40CD TCF IMO Tier II – Auxiliary GenSet

2025-06-16 - 1.0

2.17.6 Load specific values at ISO conditions – MAN L/V32/40CD TCF IMO Tier II – Auxiliary GenSet

500 kW/cyl., 720 rpm or 500 kW/cyl., 750 rpm – Auxiliary GenSet

Reference conditions: ISO		
Air temperature	°C	25
Cooling water temp. before charge air cooler (LT stage)		25
Total atmospheric pressure	mbar	1,000
Relative humidity	%	30

Table 53: Reference conditions: ISO

Engine output	**%**	**100**	**85**	**75**	**50**
Speed	**rpm**	**720/750**			
Heat to be dissipated[1]					
Charge air: Charge air cooler (HT stage)[2] Charge air cooler (LT stage)[2]	kJ/kWh	 894 510	 858 529	 763 515	 444 489
Lube oil cooler[3]		394	437	462	579
Jacket cooling		469	461	476	550
Nozzle cooling		14	14	14	15
Heat radiation engine (based on engine room temp. 35°C)		101	112	121	156
Air data					
Temperature of charge air: After compressor At charge air cooler outlet	°C	 217 43	 199 40	 181 38	 131 32
Air flow rate	kg/kWh	7.85	8.51	8.7	9.17
Charge air pressure (absolute)	bar abs	4.4	3.99	3.55	2.47
Exhaust gas data[4]					
Mass flow	kg/kWh	8.05	8.72	8.90	9.38
Temperature at turbine outlet	°C	309	268	265	274
Heat content (190°C)	kJ/kWh	1,023	725	708	832
Permissible exhaust gas back pressure after turbocharger (maximum)	mbar	50	-		
Tolerances refer to 100% load.					

[1] Tolerance: +8% for rating coolers and heat radiation, +6% for central (HT-, LT- and lube oil system), -12% for heat recovery from HT- or LT- or lube oil system.

[2] The values of the particular cylinder numbers can differ depending on the charge air cooler specification.

[3] Addition required for separator heat (e.g. 30 kJ/kWh).

[4] Tolerances: Quantity ±5%; temperature ±20°C.

Table 54: Load specific values at ISO conditions – MAN L/V32/40CD TCF IMO Tier II – Auxiliary GenSet

2025-06-16 - 1.0

2.17.7 Load specific values at tropical conditions – MAN L/V32/40CD TCF IMO Tier II – Auxiliary GenSet

500 kW/cyl., 720 rpm or 500 kW/cyl., 750 rpm – Auxiliary GenSet

Reference conditions: Tropics		
Air temperature	°C	45
Cooling water temp. before charge air cooler (LT stage)		38
Total atmospheric pressure	mbar	1,000
Relative humidity	%	60

Table 55: Reference conditions: Tropics

Engine output	**%**	**100**	**85**	**75**	**50**
Speed	**rpm**	**720/750**			
Heat to be dissipated[1]					
Charge air: Charge air cooler (HT stage)[2] Charge air cooler (LT stage)[2]	kJ/kWh	 1,078 556	 1,051 580	 958 568	 641 527
Lube oil cooler[3]		469	524	554	691
Jacket cooling		529	524	541	622
Nozzle cooling		14	14	14	15
Heat radiation engine (based on engine room temp. 55°C)		79	87	94	121
Air data					
Temperature of charge air: After compressor At charge air cooler outlet	°C	 248 61	 228 58.5	 209 55.8	 156 48.7
Air flow rate	kg/kWh	7.49	8.12	8.3	8.75
Charge air pressure (absolute)	bar abs	4.4	3.98	3.54	2.46
Exhaust gas data[4]					
Mass flow	kg/kWh	7.49	8.12	8.30	8.75
Temperature at turbine outlet	°C	346	306	303	311
Heat content (190°C)	kJ/kWh	1,293	1,034	1,022	1,156
Permissible exhaust gas back pressure after turbocharger (maximum)	mbar	50	-		
Tolerances refer to 100% load.					

[1] Tolerance: +8% for rating coolers and heat radiation, +6% for central (HT-, LT- and lube oil system), -12% for heat recovery from HT- or LT- or lube oil system.

[2] The values of the particular cylinder numbers can differ depending on the charge air cooler specification.

[3] Addition required for separator heat (e.g. 30 kJ/kWh).

[4] Tolerances: Quantity ±5%; temperature ±20°C.

Table 56: Load specific values at tropical conditions – MAN L/V32/40CD TCF IMO Tier II – Auxiliary GenSet

2025-06-16 - 1.0

2.18 Planning data for emission standard: IMO Tier II – Electric propulsion

Note:
Stated figures are valid for a layout of the engine supply system as defined within this documentation. Any modifications that affect the media flow from attached pumps to the engine, required media flows, temperatures or pressures need to be agreed on by MAN Energy Solutions.

Note:

- Stated planning data for electric propulsion valid for standard engine output.

2.18.1 Nominal values for cooler specification – MAN L32/40CD TCF IMO Tier II – Electric propulsion

500 kW/cyl., 720 rpm or 500 kW/cyl., 750 rpm – Electric propulsion

Reference conditions: Tropics		
Air temperature	°C	45
Cooling water temp. before charge air cooler (LT stage)		38
Total atmospheric pressure	mbar	1,000
Relative humidity	%	60

Table 57: Reference conditions: Tropics

No. of cylinders, config.		**6L**	**7L**	**8L**	**9L**
Engine output	kW	3,000	3,500	4,000	4,500
Speed	rpm	720/750			
Heat to be dissipated[1)]					
Charge air: Charge air cooler (HT stage) Charge air cooler (LT stage)	kW	 917 455	 1,030 527	 1,198 618	 1,307 690
Lube oil cooler[2)]		390	458	521	589
Jacket cooling		440	517	588	665
Nozzle cooling		12	14	16	18
Heat radiation engine (based on engine room temp. 55°C)		66	77	88	99
Flow rates[3)]					
HT circuit (jacket cooling + charge air cooler HT)	m^3/h	36	42	48	54
LT circuit (lube oil cooler + charge air cooler LT)		57	70	74	85
Lube oil		97	108	118	129
Nozzle cooling water		1.0	1.2	1.4	1.6
Pumps					
a) Attached					
HT CW service pump	m^3/h	36	42	48	54

2025-06-16 - 1.0

No. of cylinders, config.		6L	7L	8L	9L
LT CW service pump		57	70	74	85
Lube oil service pump for application with constant speed		120	141	141	162
b) Free-standing[4]					
HT CW stand-by pump	m^3/h	36	42	48	54
LT CW stand-by pump		Depending on plant design			
Lube oil stand-by pump		102+z	113+z	124+z	136+z
Prelubrication pump		19.5–22.5 +0.5z	21.5–25.0 +0.5z	23.5–27.5 +0.5z	25.5–30.0 +0.5z
Nozzle CW pump		1.0	1.2	1.4	1.6
MGO/MDO supply pump		2.3	2.7	3.1	3.4
HFO supply pump		1.2	1.4	1.6	1.8
HFO circulating pump		2.3	2.7	3.1	3.4

[1] Tolerance: +8% for rating coolers and heat radiation, +6% for central (HT-, LT- and lube oil system), -12% for heat recovery from HT- or LT- or lube oil system.

[2] Addition required for separator heat (e.g. 30 kJ/kWh).

[3] Basic values for layout design of the coolers.

[4] Tolerances of the pumps delivery capacities must be considered by the pump manufacturer.

z = flushing oil of the automatic filter.

Table 58: Nominal values for cooler specification – MAN L32/40CD TCF IMO Tier II

Note:
You will find further planning data for the listed subjects in the corresponding sections.

- Minimal heating power required for preheating HT cooling water see paragraph HT cooling water preheating module (MOD-004).
- Minimal heating power required for preheating lube oil see paragraph H-002/Lube oil preheater, Page 312.
- Capacities of preheating pumps see paragraph HT cooling water preheating module (MOD-004).

2025-06-16 - 1.0

2.18.2 Nominal values for cooler specification – MAN V32/40CD TCF IMO Tier II – Electric propulsion

500 kW/cyl., 720 rpm or 500 kW/cyl., 750 rpm – Electric propulsion

Reference conditions: Tropics		
Air temperature	°C	45
Cooling water temp. before charge air cooler (LT stage)		38
Total atmospheric pressure	mbar	1,000
Relative humidity	%	60

Table 59: Reference conditions: Tropics

No. of cylinders, config.		12V	14V	16V	18V
Engine output	kW	6,000	7,000	8,000	9,000
Speed	rpm	720/750			
Heat to be dissipated[1)]					
Charge air: Charge air cooler (HT stage) Charge air cooler (LT stage)	kW	 1,817 921	 2,040 1,065	 2,371 1,250	 2,588 1,394
Lube oil cooler[2)]		781	917	1,043	1,179
Jacket cooling		881	1,034	1,177	1,330
Nozzle cooling		24	28	32	36
Heat radiation engine (based on engine room temp. 55°C)		131	153	175	197
Flow rates[3)]					
HT circuit (jacket cooling + charge air cooler HT)	m^3/h	72	84	96	108
LT circuit (lube oil cooler + charge air cooler LT)		114	140	148	170
Lube oil		151	163	174	186
Nozzle cooling water		2.0	2.4	2.8	3.2
Pumps					
a) Attached					
HT CW service pump	m^3/h	72	84	96	108
LT CW service pump		114	140	148	170
Lube oil service pump for application with constant speed		162	191	191	191
b) Free-standing[4)]					
HT CW stand-by pump	m^3/h	72	84	96	108
LT CW stand-by pump		Depending on plant design			
Lube oil stand-by pump		159+z	171+z	183+z	195+z
Prelubrication pump		30.0–35.0 +0.5z	32.5–38.0 +0.5z	35.0–41.0 +0.5z	37.5–44.0 +0.5z

2025-06-16 - 1.0

No. of cylinders, config.		12V	14V	16V	18V
Nozzle CW pump		2.0	2.4	2.8	3.2
MGO/MDO supply pump		4.5	5.3	6.0	6.8
HFO supply pump		2.4	2.8	3.2	3.6
HFO circulating pump		4.5	5.3	6.0	6.8

[1] Tolerance: +8% for rating coolers and heat radiation, +6% for central (HT-, LT- and lube oil system), -12% for heat recovery from HT- or LT- or lube oil system.

[2] Addition required for separator heat (e.g. 30 kJ/kWh).

[3] Basic values for layout design of the coolers.

[4] Tolerances of the pumps delivery capacities must be considered by the pump manufacturer.

z = flushing oil of the automatic filter.

Table 60: Nominal values for cooler specification – MAN V32/40CD TCF IMO Tier II – Electric propulsion

Note:
You will find further planning data for the listed subjects in the corresponding sections.

- Minimal heating power required for preheating HT cooling water see paragraph HT cooling water preheating module (MOD-004).
- Minimal heating power required for preheating lube oil see paragraph H-002/Lube oil preheater, Page 312.
- Capacities of preheating pumps see paragraph HT cooling water preheating module (MOD-004).

2025-06-16 - 1.0

2.18.3 Flow scheme for cooler specification – MAN L/V32/40CD TCF IMO Tier II

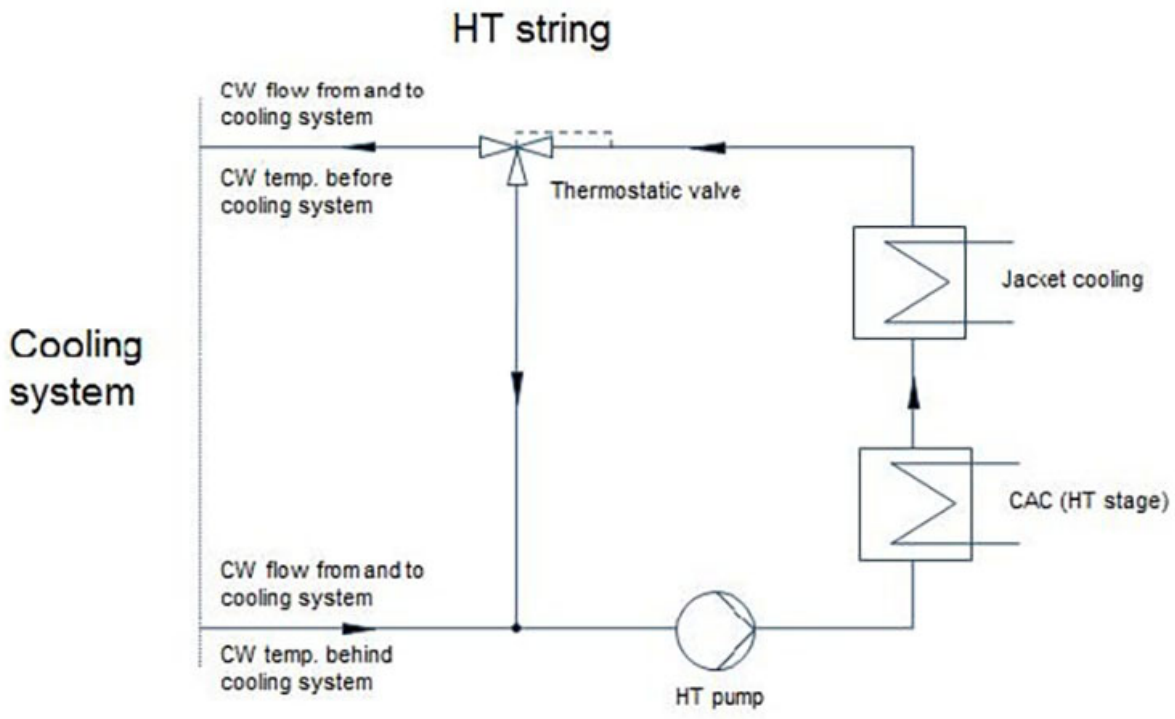

Figure 43: Flow scheme 2-string-HT-thermostat - MAN L/V32/40CD TCF, exemplary

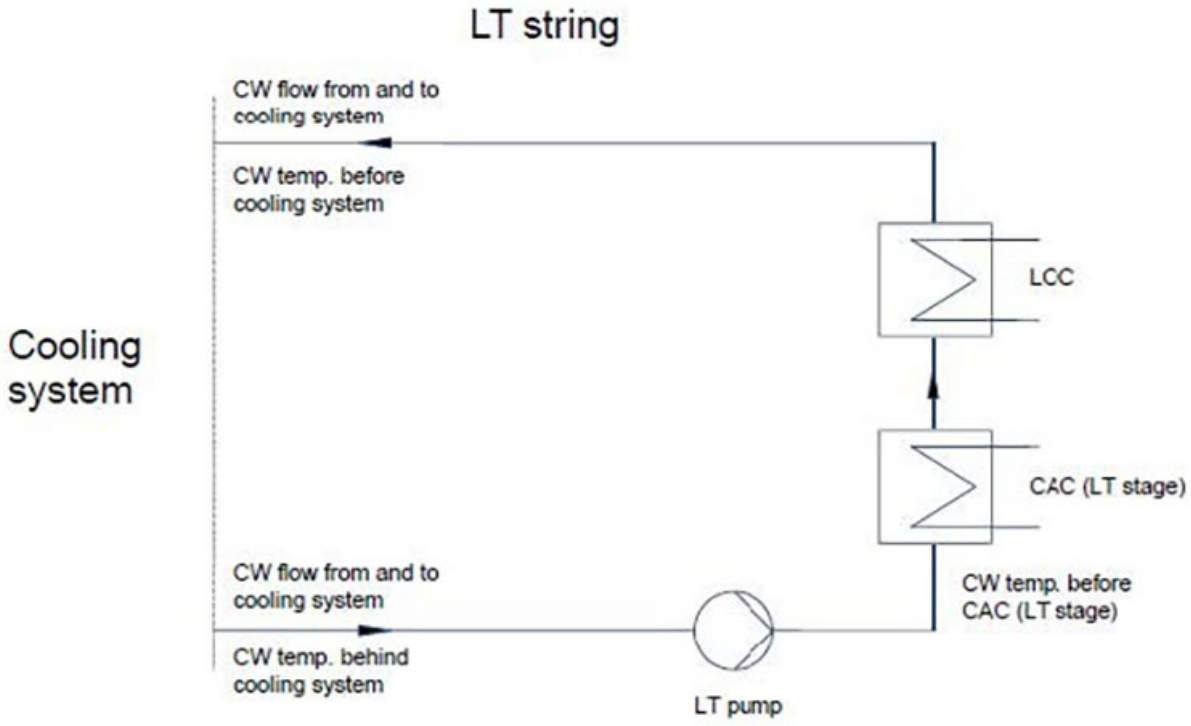

Figure 44: Flow scheme 2-string-LT-thermostat - MAN L/V32/40CD TCF, exemplary

2025-06-16 - 1.0

2.18.4 Temperature basis, nominal air and exhaust gas data – MAN L32/40CD TCF IMO Tier II – Electric propulsion

500 kW/cyl., 720 rpm or 500 kW/cyl., 750 rpm – Electric propulsion

Reference conditions: Tropics		
Air temperature	°C	45
Cooling water temp. before charge air cooler (LT stage)		38
Total atmospheric pressure	mbar	1,000
Relative humidity	%	60

Table 61: Reference conditions: Tropics

No. of cylinders, config.		6L	7L	8L	9L
Engine output	kW	3,000	3,500	4,000	4,500
Speed	rpm	720/750			
Temperature basis					
HT cooling water engine outlet[1]	°C	90			
LT cooling water air cooler inlet		38 (setpoint 32°C)[2]			
Lube oil engine inlet		65			
Nozzle cooling water engine inlet		60			
Air data					
Temperature of charge air at charge air cooler outlet	°C	60.6	61.8	61	61.9
Air flow rate[3]	m^3/h	20,558	23,931	27,393	30,763
Mass flow	t/h	21.2	26.2	30	33.7
Charge air pressure (absolute)	bar abs	4.4			
Air required to dissipate heat radiation (engine) ($t_2 - t_1$ = 10°C)	m^3/h	21,113	24,631	28,150	31,669
Exhaust gas data[4]					
Volume flow (temperature turbocharger outlet)[5]	m^3/h	41,083	47,996	54,800	61,717
Mass flow	t/h	23.1	26.9	30.8	33.7
Temperature at turbine outlet	°C	345	348	346	348
Heat content (190°C)	kW	1,074	1,268	1,437	1,632
Permissible exhaust gas back pressure after turbocharger	mbar	50			

[1] HT cooling water flow first through water jacket and cylinder head, then through HT stage charge air cooler.

[2] For design see figure Cooling water system diagram – Twin engine plant, Page 346.

[3] Under mentioned above reference conditions.

[4] Tolerances (exhaust gas data): ±15°C for temperature at turbine outlet, ±4% for flow quantity.

[5] Calculated based on stated temperature at turbine outlet and total atmospheric pressure according mentioned above reference conditions.

Table 62: Temperature basis, nominal air and exhaust gas data – MAN L32/40CD TCF IMO Tier II – Electric propulsion

2025-06-16 - 1.0

2.18.5 Temperature basis, nominal air and exhaust gas data – MAN V32/40CD TCF IMO Tier II – Electric propulsion

500 kW/cyl., 720 rpm or 500 kW/cyl., 750 rpm – Electric propulsion

Reference conditions: Tropics		
Air temperature	°C	45
Cooling water temp. before charge air cooler (LT stage)		38
Total atmospheric pressure	mbar	1,000
Relative humidity	%	60

Table 63: Reference conditions: Tropics

No. of cylinders, config.		12V	14V	16V	18V
Engine output	kW	6,000	7,000	8,000	9,000
Speed	rpm	720/750			
Temperature basis					
HT cooling water engine outlet[1]	°C	90			
LT cooling water air cooler inlet		38 (setpoint 32°C)[2]			
Lube oil engine inlet		65			
Nozzle cooling water engine inlet		60			
Air data					
Temperature of charge air at charge air cooler outlet	°C	61	62	61	62
Air flow rate[3]	m^3/h	41,100	47,850	54,756	61,512
Mass flow	t/h	45	52.4	59.9	67.3
Charge air pressure (absolute)	bar abs	4.4			
Air required to dissipate heat radiation (engine) ($t_2 - t_1$ = 10°C)	m^3/h	42,225	49,263	56,300	63,338
Exhaust gas data[4]					
Volume flow (temperature turbocharger outlet)[5]	m^3/h	82,163	95,977	109,598	123,414
Mass flow	t/h	46.2	53.8	61.6	69.2
Temperature at turbine outlet	°C	346	348	347	348
Heat content (190°C)	kW	2,151	2,538	2,880	3,266
Permissible exhaust gas back pressure after turbocharger	mbar	50			

[1] HT cooling water flow first through water jacket and cylinder head, then through HT stage charge air cooler.

[2] For design see figure Cooling water system diagram – Twin engine plant, Page 346.

[3] Under mentioned above reference conditions.

[4] Tolerances (exhaust gas data): ±15°C for temperature at turbine outlet, ±4% for flow quantity.

[5] Calculated based on stated temperature at turbine outlet and total atmospheric pressure according mentioned above reference conditions.

Table 64: Temperature basis, nominal air and exhaust gas data – MAN V32/40CD TCF IMO Tier II – Electric propulsion

2025-06-16 - 1.0

2.18.6 Load specific values at ISO conditions – MAN L/V32/40CD TCF IMO Tier II – Electric propulsion

500 kW/cyl., 720 rpm or 500 kW/cyl., 750 rpm – Electric propulsion

Reference conditions: ISO		
Air temperature	°C	25
Cooling water temp. before charge air cooler (LT stage)		25
Total atmospheric pressure	mbar	1,000
Relative humidity	%	30

Table 65: Reference conditions: ISO

Engine output	%	100	85	75	50
Speed	rpm	720/750			
Heat to be dissipated[1]					
Charge air: Charge air cooler (HT stage)[2] Charge air cooler (LT stage)[2]	kJ/kWh	 894 510	 858 529	 763 515	 444 489
Lube oil cooler[3]		394	437	462	579
Jacket cooling		469	461	476	550
Nozzle cooling		14	14	14	15
Heat radiation engine (based on engine room temp. 35°C)		101	112	121	156
Air data					
Temperature of charge air: After compressor At charge air cooler outlet	°C	 217 43	 199 40	 181 38	 131 32
Air flow rate	kg/kWh	7.85	8.51	8.7	9.17
Charge air pressure (absolute)	bar abs	4.4	3.99	3.55	2.47
Exhaust gas data[4]					
Mass flow	kg/kWh	8.05	8.72	8.90	9.38
Temperature at turbine outlet	°C	309	268	265	274
Heat content (190°C)	kJ/kWh	1,023	725	708	832
Permissible exhaust gas back pressure after turbocharger (maximum)	mbar	50	-		
Tolerances refer to 100% load.					

[1] Tolerance: +8% for rating coolers and heat radiation, +6% for central (HT-, LT- and lube oil system), -12% for heat recovery from HT- or LT- or lube oil system.

[2] The values of the particular cylinder numbers can differ depending on the charge air cooler specification.

[3] Addition required for separator heat (e.g. 30 kJ/kWh).

[4] Tolerances: Quantity ±5%; temperature ±20°C.

Table 66: Load specific values at ISO conditions – MAN L/V32/40CD TCF IMO Tier II – Electric propulsion

2025-06-16 - 1.0

2.18.7 Load specific values at tropical conditions – MAN L/V32/40CD TCF IMO Tier II – Electric propulsion

500 kW/cyl., 720 rpm or 500 kW/cyl., 750 rpm – Electric propulsion

Reference conditions: Tropics		
Air temperature	°C	45
Cooling water temp. before charge air cooler (LT stage)		38
Total atmospheric pressure	mbar	1,000
Relative humidity	%	60

Table 67: Reference conditions: Tropics

Engine output	%	100	85	75	50
Speed	rpm	720/750			
Heat to be dissipated[1]					
Charge air: Charge air cooler (HT stage)[2] Charge air cooler (LT stage)[2]	kJ/kWh	 1,078 556	 1,051 580	 958 568	 641 527
Lube oil cooler[3]		469	524	554	691
Jacket cooling		529	524	541	622
Nozzle cooling		14	14	14	15
Heat radiation engine (based on engine room temp. 55°C)		79	87	94	121
Air data					
Temperature of charge air: After compressor At charge air cooler outlet	°C	 248 61	 228 58.5	 209 55.8	 156 48.7
Air flow rate	kg/kWh	7.49	8.12	8.3	8.75
Charge air pressure (absolute)	bar abs	4.4	3.98	3.54	2.46
Exhaust gas data[4]					
Mass flow	kg/kWh	7.49	8.12	8.30	8.75
Temperature at turbine outlet	°C	346	306	303	311
Heat content (190°C)	kJ/kWh	1,293	1,034	1,022	1,156
Permissible exhaust gas back pressure after turbocharger (maximum)	mbar	50	-		
Tolerances refer to 100% load.					

[1] Tolerance: +8% for rating coolers and heat radiation, +6% for central (HT-, LT- and lube oil system), -12% for heat recovery from HT- or LT- or lube oil system.

[2] The values of the particular cylinder numbers can differ depending on the charge air cooler specification.

[3] Addition required for separator heat (e.g. 30 kJ/kWh).

[4] Tolerances: Quantity ±5%; temperature ±20°C.

Table 68: Load specific values at tropical conditions – MAN L/V32/40CD TCF IMO Tier II – Electric propulsion

2025-06-16 - 1.0

2.19 Planning data for emission standard: IMO Tier II – Mechanical propulsion with CPP

Note:
Stated figures are valid for a layout of the engine supply system as defined within this documentation. Any modifications that affect the media flow from attached pumps to the engine, required media flows, temperatures or pressures need to be agreed on by MAN Energy Solutions.

2.19.1 Nominal values for cooler specification – MAN L32/40CD TCF IMO Tier II – Mechanical propulsion with CPP

500 kW/cyl., 720 rpm or 500 kW/cyl., 750 rpm – Mechanical propulsion with CPP

Reference conditions: Tropics		
Air temperature	°C	45
Cooling water temp. before charge air cooler (LT stage)		38
Total atmospheric pressure	mbar	1,000
Relative humidity	%	60

Table 69: Reference conditions: Tropics

No. of cylinders, config.		**6L**	**7L**	**8L**	**9L**
Engine output	kW	3,000	3,500	4,000	4,500
Speed	rpm	750			
Heat to be dissipated[1)]					
Charge air: Charge air cooler (HT stage) Charge air cooler (LT stage)	kW	 877 448	 984 518	 1,144 609	 1,249 678
Lube oil cooler[2)]		406	477	543	613
Jacket cooling		437	512	583	659
Nozzle cooling		12	14	16	18
Heat radiation engine (based on engine room temp. 55°C)		66	77	88	99
Flow rates[3)]					
HT circuit (jacket cooling + charge air cooler HT)	m^3/h	36	42	48	54
LT circuit (lube oil cooler + charge air cooler LT)		57	70	74	85
Lube oil		97	108	118	129
Nozzle cooling water		1.0	1.2	1.4	1.6
Pumps					
a) Attached					
HT CW service pump	m^3/h	36	42	48	54
LT CW service pump		57	70	74	85

2025-06-16 - 1.0

No. of cylinders, config.		6L	7L	8L	9L
Lube oil service pump for application with constant speed		120	141	162	162
b) Free-standing[4]					
HT CW stand-by pump	m^3/h	36	42	48	54
LT CW stand-by pump		Depending on plant design			
Lube oil stand-by pump		102+z	113+z	124+z	136+z
Prelubrication pump		19.5–22.5 +0.5z	21.5–25.0 +0.5z	23.5–27.5 +0.5z	25.5–30.0 +0.5z
Nozzle CW pump		1.0	1.2	1.4	1.6
MGO/MDO supply pump		2.2	2.6	3.0	3.4
HFO supply pump		1.2	1.4	1.6	1.8
HFO circulating pump		2.2	2.6	3.0	3.4

[1] Tolerance: +8% for rating coolers and heat radiation, +6% for central (HT-, LT- and lube oil system), -12% for heat recovery from HT- or LT- or lube oil system.

[2] Addition required for separator heat (e.g. 30 kJ/kWh).

[3] Basic values for layout design of the coolers.

[4] Tolerances of the pumps delivery capacities must be considered by the pump manufacturer.

z = flushing oil of the automatic filter.

Table 70: Nominal values for cooler specification – MAN L32/40CD IMO TCF Tier II – Mechanical propulsion with CPP

Note:
You will find further planning data for the listed subjects in the corresponding sections.

- Minimal heating power required for preheating HT cooling water see paragraph HT cooling water preheating module (MOD-004).
- Minimal heating power required for preheating lube oil see paragraph H-002/Lube oil preheater, Page 312.
- Capacities of preheating pumps see paragraph HT cooling water preheating module (MOD-004).

2025-06-16 - 1.0

2.19.2 Nominal values for cooler specification – MAN V32/40CD TCF IMO Tier II – Mechanical propulsion with CPP

500 kW/cyl., 750 rpm – Mechanical propulsion with CPP

Reference conditions: Tropics		
Air temperature	°C	45
Cooling water temp. before charge air cooler (LT stage)		38
Total atmospheric pressure	mbar	1,000
Relative humidity	%	60

Table 71: Reference conditions: Tropics

No. of cylinders, config.		**12V**	**14V**	**16V**	**18V**
Engine output	kW	6,000	7,000	8,000	9,000
Speed	rpm	750			
Heat to be dissipated[1)]					
Charge air: Charge air cooler (HT stage) Charge air cooler (LT stage)	kW	 1,753 896	 1,969 1,035	 2,289 1,217	 2,498 1,356
Lube oil cooler[2)]		813	954	1,085	1,227
Jacket cooling		873	1,025	1,166	1,318
Nozzle cooling		24	28	32	36
Heat radiation engine (based on engine room temp. 55°C)		131	153	175	197
Flow rates[3)]					
HT circuit (jacket cooling + charge air cooler HT)	m^3/h	72	84	96	108
LT circuit (lube oil cooler + charge air cooler LT)		114	140	148	170
Lube oil		151	163	174	186
Nozzle cooling water		2.0	2.4	2.8	3.2
Pumps					
a) Attached					
HT CW service pump	m^3/h	72	84	96	108
LT CW service pump		114	140	148	170
Lube oil service pump for application with constant speed		191	191	226	226
b) Free-standing[4)]					
HT CW stand-by pump	m^3/h	72	84	96	108
LT CW stand-by pump		Depending on plant design			
Lube oil stand-by pump		159+z	171+z	183+z	195+z
Prelubrication pump		30.0–35.0 +0.5z	32.5–38.0 +0.5z	35.0–41.0 +0.5z	37.5–44.0 +0.5z

2025-06-16 - 1.0

No. of cylinders, config.		12V	14V	16V	18V
Nozzle CW pump		2.0	2.4	2.8	3.2
MGO/MDO supply pump		4.4	5.2	5.9	6.7
HFO supply pump		2.4	2.8	3.2	3.6
HFO circulating pump		4.4	5.2	5.9	6.7

[1] Tolerance: +8% for rating coolers and heat radiation, +6% for central (HT-, LT- and lube oil system), -12% for heat recovery from HT- or LT- or lube oil system.

[2] Addition required for separator heat (e.g. 30 kJ/kWh).

[3] Basic values for layout design of the coolers.

[4] Tolerances of the pumps delivery capacities must be considered by the pump manufacturer.

z = flushing oil of the automatic filter.

Table 72: Nominal values for cooler specification – MAN V32/40CD TCF IMO Tier II – Mechanical propulsion with CPP

Note:
You will find further planning data for the listed subjects in the corresponding sections.

- Minimal heating power required for preheating HT cooling water see paragraph HT cooling water preheating module (MOD-004).
- Minimal heating power required for preheating lube oil see paragraph H-002/Lube oil preheater, Page 312.
- Capacities of preheating pumps see paragraph HT cooling water preheating module (MOD-004).

2025-06-16 - 1.0

2.19.3 Flow scheme for cooler specification – MAN L/V32/40CD TCF IMO Tier II

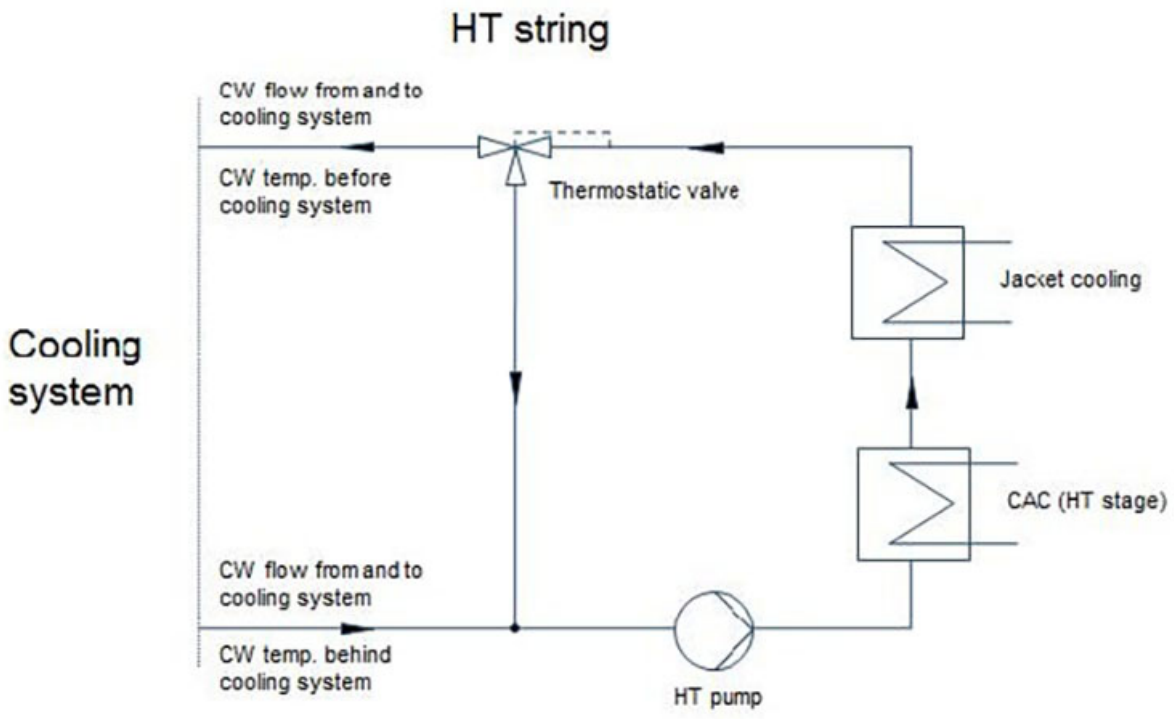

Figure 45: Flow scheme 2-string-HT-thermostat - MAN L/V32/40CD TCF, exemplary

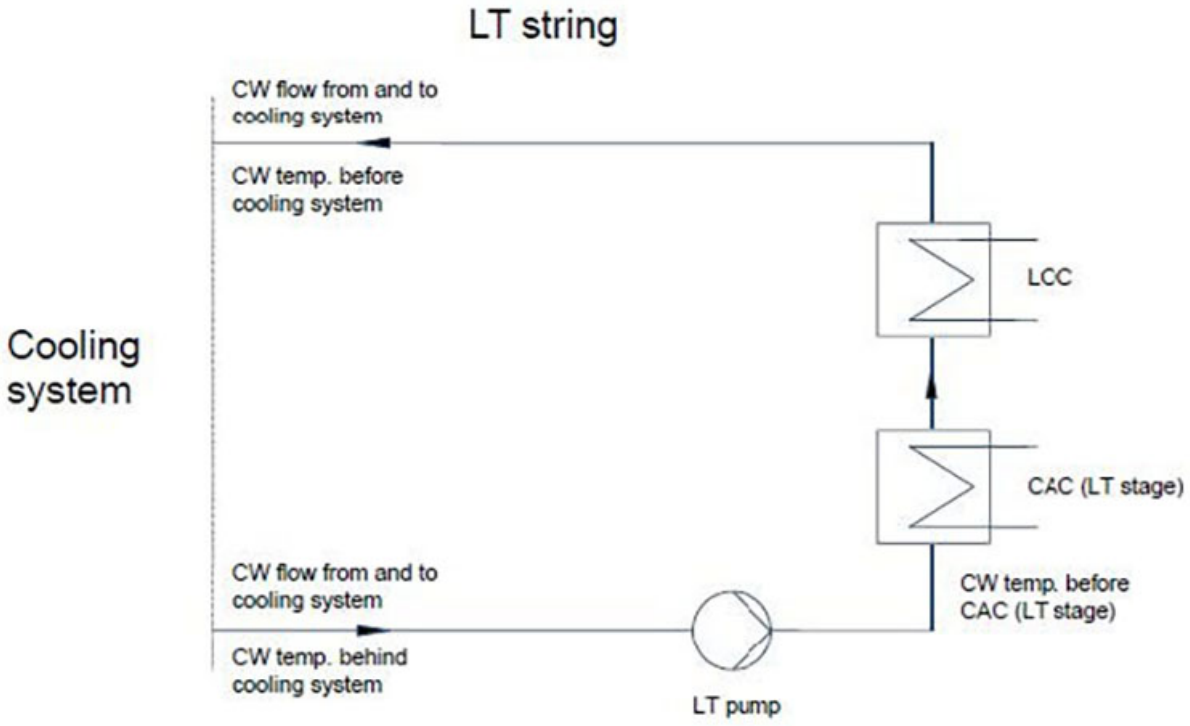

Figure 46: Flow scheme 2-string-LT-thermostat - MAN L/V32/40CD TCF, exemplary

2025-06-16 - 1.0

2.19.4 Temperature basis, nominal air and exhaust gas data – MAN L32/40CD TCF IMO Tier II – Mechanical propulsion with CPP

500 kW/cyl., 750 rpm – Mechanical propulsion with CPP

Reference conditions: Tropics		
Air temperature	°C	45
Cooling water temp. before charge air cooler (LT stage)		38
Total atmospheric pressure	mbar	1,000
Relative humidity	%	60

Table 73: Reference conditions: Tropics

No. of cylinders, config.		6L	7L	8L	9L
Engine output	kW	3,000	3,500	4,000	4,500
Speed	rpm	750			
Temperature basis					
HT cooling water engine outlet[1]	°C	90			
LT cooling water air cooler inlet		38 (setpoint 32°C)[2]			
Lube oil engine inlet		65			
Nozzle cooling water engine inlet		60			
Air data					
Temperature of charge air at charge air cooler outlet	°C	60	61	61	61
Air flow rate[3]	m^3/h	20,165	23,473	26,870	30,176
Mass flow	t/h	22.1	25.7	29.4	33.0
Charge air pressure (absolute)	bar abs	4.3			
Air required to dissipate heat radiation (engine) ($t_2 - t_1$ = 10°C)	m^3/h	21,113	24,631	28,150	31,669
Exhaust gas data[4]					
Volume flow (temperature turbocharger outlet)[5]	m^3/h	40,648	47,481	54,216	61,052
Mass flow	t/h	22.7	26.4	30.2	34.0
Temperature at turbine outlet	°C	351	353	351	353
Heat content (190°C)	kW	1,090	1,286	1,458	1,654
Permissible exhaust gas back pressure after turbocharger (maximum)	mbar	50			

[1] HT cooling water flow first through water jacket and cylinder head, then through HT stage charge air cooler.

[2] For design see figure Cooling water system diagram – Twin engine plant, Page 346.

[3] Under mentioned above reference conditions.

[4] Tolerances (exhaust gas data): ±15°C for temperature at turbine outlet, ±4% for flow quantity.

[5] Calculated based on stated temperature at turbine outlet and total atmospheric pressure according mentioned above reference conditions.

Table 74: Temperature basis, nominal air and exhaust gas data – MAN L32/40CD TCF IMO Tier II – Mechanical propulsion with CPP

2025-06-16 - 1.0

2.19.5 Temperature basis, nominal air and exhaust gas data – MAN V32/40CD TCF IMO Tier II – Mechanical propulsion with CPP

500 kW/cyl., 750 rpm – Mechanical propulsion with CPP

Reference conditions: Tropics		
Air temperature	°C	45
Cooling water temp. before charge air cooler (LT stage)		38
Total atmospheric pressure	mbar	1,000
Relative humidity	%	60

Table 75: Reference conditions: Tropics

No. of cylinders, config.		12V	14V	16V	18V
Engine output	kW	6,000	7,000	8,000	9,000
Speed	rpm	750			
Temperature basis					
HT cooling water engine outlet[1]	°C	90			
LT cooling water air cooler inlet		38 (setpoint 32°C)[2]			
Lube oil engine inlet		65			
Nozzle cooling water engine inlet		60			
Air data					
Temperature of charge air at charge air cooler outlet	°C	60	60	61	61
Air flow rate[3]	m^3/h	40,329	46,946	53,741	60,352
Mass flow	t/h	44.1	51.4	58.8	66.1
Charge air pressure (absolute)	bar abs	4.3			
Air required to dissipate heat radiation (engine) ($t_2 - t_1$ = 10°C)	m^3/h	42,225	49,263	56,300	63,338
Exhaust gas data[4]					
Volume flow (temperature turbocharger outlet)[5]	m^3/h	81,272	94,935	108,400	122,069
Mass flow	t/h	45.4	52.8	60.5	67.9
Temperature at turbine outlet	°C	351	353	351	353
Heat content (190°C)	kW	2,178	2,570	2,914	3,307
Permissible exhaust gas back pressure after turbocharger (maximum)	mbar	50			

[1] HT cooling water flow first through water jacket and cylinder head, then through HT stage charge air cooler.

[2] For design see figure Cooling water system diagram – Twin engine plant, Page 346.

[3] Under mentioned above reference conditions.

[4] Tolerances (exhaust gas data): ±15°C for temperature at turbine outlet, ±4% for flow quantity.

[5] Calculated based on stated temperature at turbine outlet and total atmospheric pressure according mentioned above reference conditions.

Table 76: Temperature basis, nominal air and exhaust gas data – MAN V32/40CD TCF IMO Tier II – Mechanical propulsion with CPP

2025-06-16 - 1.0

2.19.6 Load specific values at ISO conditions – MAN L/V32/40CD TCF IMO Tier II – Mechanical propulsion with CPP, constant speed

500 kW/cyl., 750 rpm – Constant speed

Reference conditions: ISO		
Air temperature	°C	25
Cooling water temp. before charge air cooler (LT stage)		25
Total atmospheric pressure	mbar	1,000
Relative humidity	%	30

Table 77: Reference conditions: ISO

Engine output	%	100	85	75	50
Speed	rpm	750			
Heat to be dissipated[1]					
Charge air: Charge air cooler (HT stage)[2] Charge air cooler (LT stage)[2]	kJ/kWh	 840 470	 826 490	 729 460	 417 399
Lube oil cooler[3]		421	470	508	662
Jacket cooling		478	470	489	576
Nozzle cooling		14	14	14	15
Heat radiation engine (based on engine room temp. 35°C)		101	112	121	156
Air data					
Temperature of charge air: After compressor At charge air cooler outlet	°C	 213 46	 198 46	 181 46	 134 46
Air flow rate	kg/kWh	7.64	8.43	8.61	9.05
Charge air pressure (absolute)	bar abs	4.3	4.0	3.59	2.54
Exhaust gas data[4]					
Mass flow	kg/kWh	7.84	8.63	8.81	9.26
Temperature at turbine outlet	°C	322	273	271	284
Heat content (190°C)	kJ/kWh	1,108	757	758	923
Permissible exhaust gas back pressure after turbocharger (maximum)	mbar	50	-		
Tolerances refer to 100% load.					

[1] Tolerance: +8% for rating coolers and heat radiation, +6% for central (HT-, LT- and lube oil system), -12% for heat recovery from HT- or LT- or lube oil system.

[2] The values of the particular cylinder numbers can differ depending on the charge air cooler specification.

[3] Addition required for separator heat (e.g. 30 kJ/kWh).

[4] Tolerances: Quantity ±5%; temperature ±20°C.

Table 78: Load specific values at ISO conditions – MAN L/V32/40CD TCF IMO Tier II – Mechanical propulsion with CPP, constant speed

2025-06-16 - 1.0

2.19.7 Load specific values at tropical conditions – MAN L/V32/40CD TCF IMO Tier II – Mechanical propulsion with CPP, constant speed

500 kW/cyl., 750 rpm – Constant speed

Reference conditions: Tropics		
Air temperature	°C	45
Cooling water temp. before charge air cooler (LT stage)		38
Total atmospheric pressure	mbar	1,000
Relative humidity	%	60

Table 79: Reference conditions: Tropics

Engine output	%	100	85	75	50
Speed	rpm	750			
Heat to be dissipated[1]					
Charge air: Charge air cooler (HT stage)[2] Charge air cooler (LT stage)[2]	kJ/kWh	 1,030 548	 1,013 522	 919 398	 613 281
Lube oil cooler[3]		488	549	594	774
Jacket cooling		525	523	544	641
Nozzle cooling		14	14	14	15
Heat radiation engine (based on engine room temp. 55°C)		79	87	94	121
Air data					
Temperature of charge air: After compressor At charge air cooler outlet	°C	 244 61	 226 60	 208 60	 158 60
Air flow rate	kg/kWh	7.35	8.04	8.22	8.64
Charge air pressure (absolute)	bar abs	4.3	3.96	3.55	2.51
Exhaust gas data[4]					
Mass flow	kg/kWh	7.56	8.25	8.42	8.85
Temperature at turbine outlet	°C	351	307	306	319
Heat content (190°C)	kJ/kWh	1,312	1,034	1,040	1,223
Permissible exhaust gas back pressure after turbocharger (maximum)	mbar	50	-		
Tolerances refer to 100% load.					

[1] Tolerance: +8% for rating coolers and heat radiation, +6% for central (HT-, LT- and lube oil system), -12% for heat recovery from HT- or LT- or lube oil system.

[2] The values of the particular cylinder numbers can differ depending on the charge air cooler specification.

[3] Addition required for separator heat (e.g. 30 kJ/kWh).

[4] Tolerances: Quantity ±5%; temperature ±20°C.

Table 80: Load specific values at tropical conditions – MAN L/V32/40CD TCF IMO Tier II – Mechanical propulsion with CPP, constant speed

2025-06-16 - 1.0

2.20 Planning data for emission standard: IMO Tier II – Mechanical propulsion with FPP

Note:
Stated figures are valid for a layout of the engine supply system as defined within this documentation. Any modifications that affect the media flow from attached pumps to the engine, required media flows, temperatures or pressures need to be agreed on by MAN Energy Solutions.

2.20.1 Nominal values for cooler specification – MAN L32/40CD TCF IMO Tier II – Mechanical propulsion with FPP

450 kW/cyl., 750 rpm – Mechanical propulsion

Reference conditions: Tropics		
Air temperature	°C	45
Cooling water temp. before charge air cooler (LT stage)		38
Total atmospheric pressure	mbar	1,000
Relative humidity	%	60

Table 81: Reference conditions: Tropics

No. of cylinders, config.		**6L**	**7L**	**8L**	**9L**
Engine output	kW	2,700	3,150	3,600	4,050
Speed	rpm	750			
Heat to be dissipated[1)]					
Charge air: Charge air cooler (HT stage) Charge air cooler (LT stage)	kW	 857 453	 965 524	 1,119 616	 1,224 689
Lube oil cooler[2)]		386	453	516	583
Jacket cooling		396	464	528	596
Nozzle cooling		11	13	14	16
Heat radiation engine (based on engine room temp. 55°C)		63	74	84	95
Flow rates[3)]					
HT circuit (jacket cooling + charge air cooler HT)	m^3/h	36	42	48	54
LT circuit (lube oil cooler + charge air cooler LT)		57	70	74	85
Lube oil		97	108	118	129
Nozzle cooling water		1.0	1.2	1.4	1.6
Pumps					
a) Attached					
HT CW service pump	m^3/h	36	42	48	54
LT CW service pump		57	70	74	85

2025-06-16 - 1.0

No. of cylinders, config.		6L	7L	8L	9L
Lube oil service pump for application with variable speed		141	162	191	191
b) Free-standing[4]					
HT CW stand-by pump	m^3/h	36	42	48	54
HT CW service support pump		24	28	32	36
LT CW stand-by pump		Depending on plant design			
Lube oil stand-by pump		102+z	113+z	124+z	136+z
Lube oil service support pump		42	49	57	57
Prelubrication pump		19.5–22.5 +0.5z	21.5–25.0 +0.5z	23.5–27.5 +0.5z	25.5–30.0 +0.5z
Nozzle CW pump		1.0	1.2	1.4	1.6
MGO/MDO supply pump		2.1	2.4	2.7	3.1
HFO supply pump		1.1	1.3	1.5	1.6
HFO circulating pump		2.1	2.4	2.7	3.1

[1] Tolerance: +8% for rating coolers and heat radiation, +6% for central (HT-, LT- and lube oil system), -12% for heat recovery from HT- or LT- or lube oil system.

[2] Addition required for separator heat (e.g. 30 kJ/kWh).

[3] Basic values for layout design of the coolers.

[4] Tolerances of the pumps delivery capacities must be considered by the pump manufacturer.

z = flushing oil of the automatic filter.

Table 82: Nominal values for cooler specification – MAN L32/40CD TCF IMO Tier II – Mechanical propulsion with FPP

Note:
You will find further planning data for the listed subjects in the corresponding sections.

- Minimal heating power required for preheating HT cooling water see paragraph HT cooling water preheating module (MOD-004).
- Minimal heating power required for preheating lube oil see paragraph H-002/Lube oil preheater, Page 312.
- Capacities of preheating pumps see paragraph HT cooling water preheating module (MOD-004).

2025-06-16 - 1.0

2.20.2 Nominal values for cooler specification – MAN V32/40CD TCF IMO Tier II – Mechanical propulsion with FPP

450 kW/cyl., 750 rpm – Mechanical propulsion with FPP

Reference conditions: Tropics		
Air temperature	°C	45
Cooling water temp. before charge air cooler (LT stage)		38
Total atmospheric pressure	mbar	1,000
Relative humidity	%	60

Table 83: Reference conditions: Tropics

No. of cylinders, config.		12V	14V	16V	18V
Engine output	kW	5,400	6,300	7,200	8,100
Speed	rpm	750			
Heat to be dissipated[1]					
Charge air: Charge air cooler (HT stage) Charge air cooler (LT stage)	kW	 1,713 905	 1,929 1,049	 2,238 1,232	 2,447 1,379
Lube oil cooler[2]		773	906	1,032	1,166
Jacket cooling		791	927	1,056	1,192
Nozzle cooling		22	25	29	32
Heat radiation engine (based on engine room temp. 55°C)		127	148	169	190
Flow rates[3]					
HT circuit (jacket cooling + charge air cooler HT)	m^3/h	72	84	96	108
LT circuit (lube oil cooler + charge air cooler LT)		114	140	148	170
Lube oil		151	163	174	186
Nozzle cooling water		2.0	2.4	2.8	3.2
Pumps					
a) Attached					
HT CW service pump	m^3/h	72	84	96	108
LT CW service pump		114	140	148	170
Lube oil service pump for application with variable speed		226	226	240	282
b) Free-standing[4]					
HT CW stand-by pump	m^3/h	72	84	96	108
HT CW service support pump		47	55	63	71
LT CW stand-by pump		Depending on plant design			
Lube oil stand-by pump		159+z	171+z	183+z	195+z

2025-06-16 - 1.0

No. of cylinders, config.		12V	14V	16V	18V
Lube oil service support pump		67	67	79	79
Prelubrication pump		30.0–35.0 +0.5z	32.5–38.0 +0.5z	35.0–41.0 +0.5z	37.5–44.0 +0.5z
Nozzle CW pump		2.0	2.4	2.8	3.2
MGO/MDO supply pump		4.1	4.7	5.4	6.1
HFO supply pump		2.2	2.5	2.9	3.3
HFO circulating pump		4.1	4.7	5.4	6.1

[1] Tolerance: +8% for rating coolers and heat radiation, +6% for central (HT-, LT- and lube oil system), -12% for heat recovery from HT- or LT- or lube oil system.

[2] Addition required for separator heat (e.g. 30 kJ/kWh).

[3] Basic values for layout design of the coolers.

[4] Tolerances of the pumps delivery capacities must be considered by the pump manufacturer.

z = flushing oil of the automatic filter.

Table 84: Nominal values for cooler specification – MAN V32/40CD TCF IMO Tier II – Mechanical propulsion with FPP

Note:
You will find further planning data for the listed subjects in the corresponding sections.

- Minimal heating power required for preheating HT cooling water see paragraph HT cooling water preheating module (MOD-004).
- Minimal heating power required for preheating lube oil see paragraph H-002/Lube oil preheater, Page 312.
- Capacities of preheating pumps see paragraph HT cooling water preheating module (MOD-004).

2025-06-16 - 1.0

2.20.3 Flow scheme for cooler specification – MAN L/V32/40CD TCF IMO Tier II

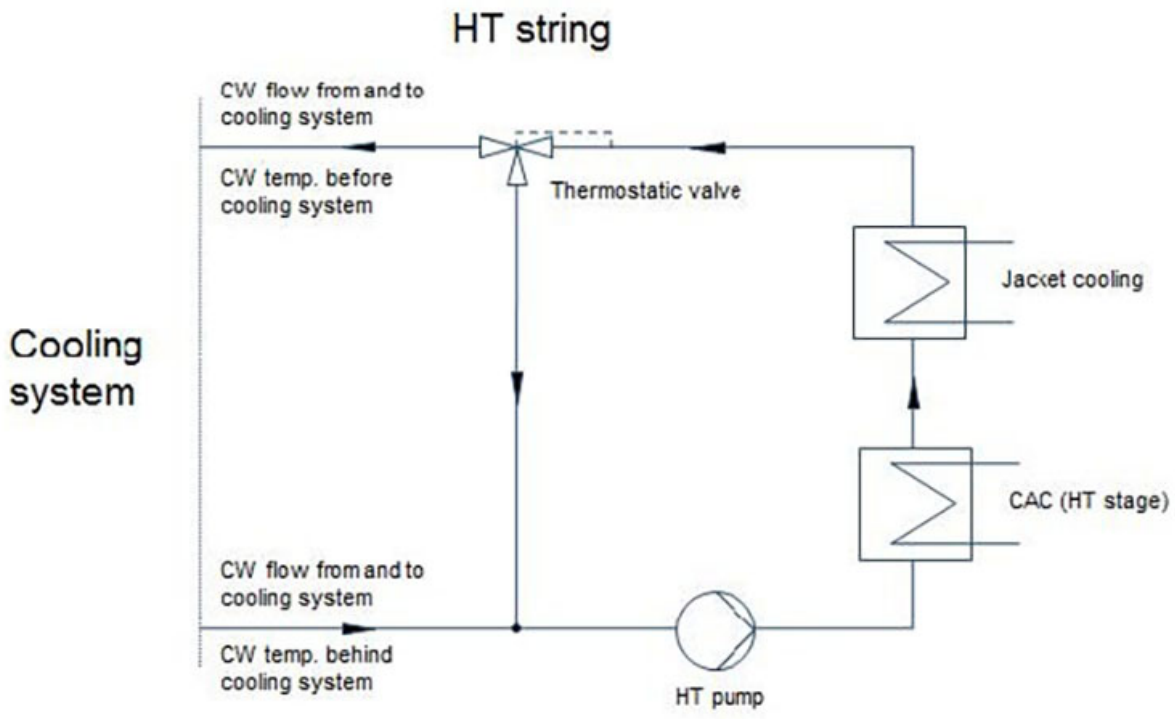

Figure 47: Flow scheme 2-string-HT-thermostat - MAN L/V32/40CD TCF, exemplary

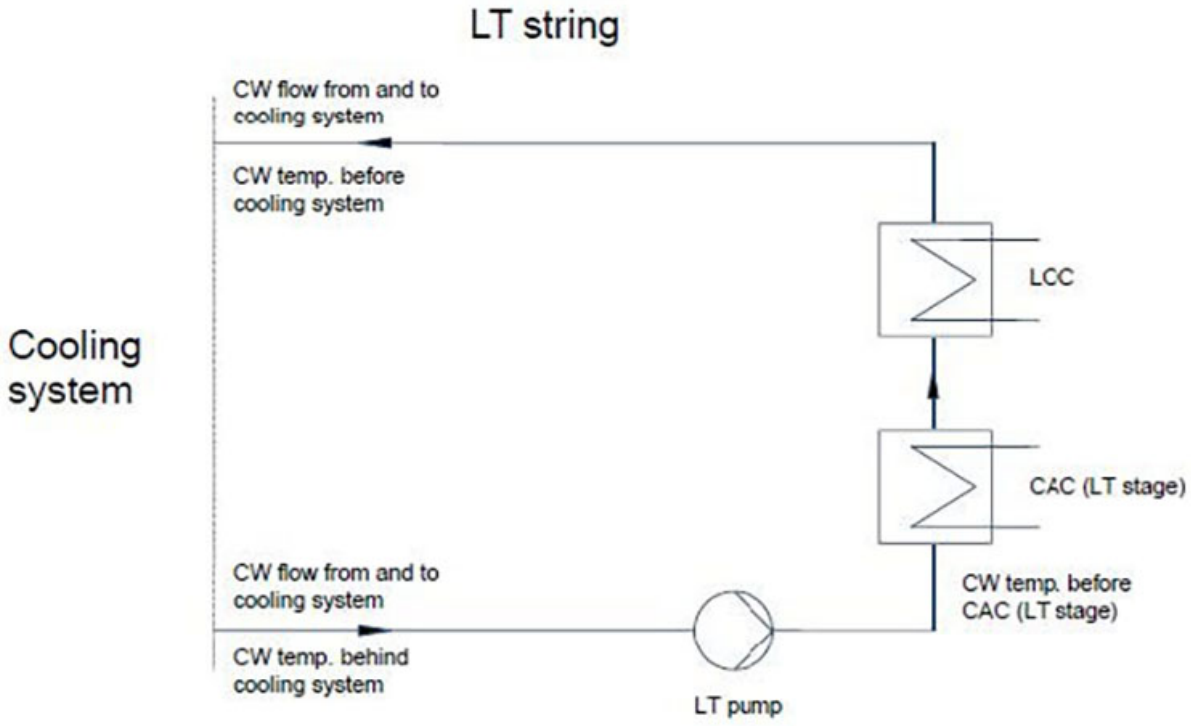

Figure 48: Flow scheme 2-string-LT-thermostat - MAN L/V32/40CD TCF, exemplary

2025-06-16 - 1.0

2.20.4 Temperature basis, nominal air and exhaust gas data – MAN L32/40CD TCF IMO Tier II – Mechanical propulsion with FPP

450 kW/cyl., 750 rpm – Mechanical propulsion with FPP

Reference conditions: Tropics		
Air temperature	°C	45
Cooling water temp. before charge air cooler (LT stage)		38
Total atmospheric pressure	mbar	1,000
Relative humidity	%	60

Table 85: Reference conditions: Tropics

No. of cylinders, config		6L	7L	8L	9L
Engine output	kW	2,700	3,150	3,600	4,050
Speed	rpm	750			
Temperature basis					
HT cooling water engine outlet[1]	°C	90			
LT cooling water air cooler inlet		38 (setpoint 32°C)[2]			
Lube oil engine inlet		65			
Nozzle cooling water engine inlet		60			
Air data					
Temperature of charge air at charge air cooler outlet	°C	60	62	61	62
Air flow rate[3]	m^3/h	20,550	23,972	27,399	30,821
Mass flow	t/h	22.5	26.2	30.0	33.7
Charge air pressure (absolute)	bar abs	4.06			
Air required to dissipate heat radiation (engine) ($t_2 - t_1$ = 10°C)	m^3/h	20,355	23,748	27,140	30,533
Exhaust gas data[4]					
Volume flow (temperature turbocharger outlet)[5]	m^3/h	38,951	45,500	51,955	58,507
Mass flow	t/h	23.1	26.9	30.7	34.6
Temperature at turbine outlet	°C	315	315	315	316
Heat content (190°C)	kW	856	1,005	1,144	1,293
Permissible exhaust gas back pressure after turbocharger (maximum)	mbar	50			

[1] HT cooling water flow first through water jacket and cylinder head, then through HT stage charge air cooler.

[2] For design see figure Cooling water system diagram – Twin engine plant, Page 346.

[3] Under mentioned above reference conditions.

[4] Tolerances (exhaust gas data): ±15°C for temperature at turbine outlet, ±4% for flow quantity.

[5] Calculated based on stated temperature at turbine outlet and total atmospheric pressure according mentioned above reference conditions.

Table 86: Temperature basis, nominal air and exhaust gas data – MAN L32/40CD TCF IMO Tier II – Mechanical propulsion with FPP

2025-06-16 - 1.0

2.20.5 Temperature basis, nominal air and exhaust gas data – MAN V32/40CD TCF IMO Tier II – Mechanical propulsion with FPP

450 kW/cyl., 750 rpm – Mechanical propulsion with FPP

Reference conditions: Tropics		
Air temperature	°C	45
Cooling water temp. before charge air cooler (LT stage)		38
Total atmospheric pressure	mbar	1,000
Relative humidity	%	60

Table 87: Reference conditions: Tropics

No. of cylinders, config.		12V	14V	16V	18V
Engine output	kW	5,400	6,300	7,200	8,100
Speed	rpm	750			
Temperature basis					
HT cooling water engine outlet[1]	°C	90			
LT cooling water air cooler inlet		38 (setpoint 32°C)[2]			
Lube oil engine inlet		65			
Nozzle cooling water engine inlet		60			
Air data					
Temperature of charge air at charge air cooler outlet	°C	60	62	61	62
Air flow rate[3]	m^3/h	41,100	47,944	54,798	61,642
Mass flow	t/h	45	52.5	60	67.5
Charge air pressure (absolute)	bar abs	4.06			
Air required to dissipate heat radiation (engine) ($t_2 - t_1$ = 10°C)	m^3/h	40,711	47,496	54,281	61,066
Exhaust gas data[4]					
Volume flow (temperature turbocharger outlet)[5]	m^3/h	72,882	90,978	103,882	116,984
Mass flow	t/h	46.1	53.8	61.5	69.2
Temperature at turbine outlet	°C	315	316	315	316
Heat content (190°C)	kW	1,711	2,009	2,286	2,585
Permissible exhaust gas back pressure after turbocharger (maximum)	mbar	50			

[1] HT cooling water flow first through water jacket and cylinder head, then through HT stage charge air cooler.

[2] For design see figure Cooling water system diagram – Twin engine plant, Page 346.

[3] Under mentioned above reference conditions.

[4] Tolerances (exhaust gas data): ±15°C for temperature at turbine outlet, ±4% for flow quantity.

[5] Calculated based on stated temperature at turbine outlet and total atmospheric pressure according mentioned above reference conditions.

Table 88: Temperature basis, nominal air and exhaust gas data – MAN V32/40CD TCF IMO Tier II – Mechanical propulsion with FPP

2025-06-16 - 1.0

2.20.6 Load specific values at ISO conditions – MAN L/V32/40CD TCF IMO Tier II – Mechanical propulsion with FPP

450 kW/cyl., 750 rpm – Mechanical propulsion with FPP

Reference conditions: ISO		
Air temperature	°C	25
Cooling water temp. before charge air cooler (LT stage)		25
Total atmospheric pressure	mbar	1,000
Relative humidity	%	30

Table 89: Reference conditions: ISO

Engine output	**%**	**100**	**85**	**75**	**50**
Speed	**rpm**	**750**	**710**	**683**	**600**
Heat to be dissipated[1]					
Charge air: Charge air cooler (HT stage)[2] Charge air cooler (LT stage)[2]	kJ/kWh	 924 546	 788 470	 664 419	 453 449
Lube oil cooler[3]		440	470	489	579
Jacket cooling		473	496	520	618
Nozzle cooling		14	14	14	15
Heat radiation engine (based on engine room temp. 35°C)		109	119	129	165
Air data					
Temperature of charge air: After compressor At charge air cooler outlet	°C	 210 46	 190 46	 172 46	 133 46
Air flow rate	kg/kWh	8.73	8.56	8.37	10.16
Charge air pressure (absolute)	bar abs	4.35	3.74	3.31	2.46
Exhaust gas data[4]					
Mass flow	kg/kWh	8.93	8.76	8.57	10.36
Temperature at turbine outlet	°C	279	282	290	249
Heat content (190°C)	kJ/kWh	850	857	912	644
Permissible exhaust gas back pressure after turbocharger (maximum)	mbar	50	-		
Tolerances refer to 100% load.					

[1] Tolerance: +8% for rating coolers and heat radiation, +6% for central (HT-, LT- and lube oil system), -12% for heat recovery from HT- or LT- or lube oil system.

[2] The values of the particular cylinder numbers can differ depending on the charge air cooler specification.

[3] Addition required for separator heat (e.g. 30 kJ/kWh).

[4] Tolerances: Quantity ±5%; temperature ±20°C.

Table 90: Load specific values at ISO conditions – MAN L/V32/40CD TCF IMO Tier II – Mechanical propulsion with FPP

2025-06-16 - 1.0

2.20.7 Load specific values at tropical conditions – MAN L/V32/40CD TCF IMO Tier II – Mechanical propulsion with FPP

450 kW/cyl., 750 rpm – Mechanical propulsion with FPP

Reference conditions: Tropics		
Air temperature	°C	45
Cooling water temp. before charge air cooler (LT stage)		38
Total atmospheric pressure	mbar	1,000
Relative humidity	%	60

Table 91: Reference conditions: Tropics

Engine output	%	100	85	75	50
Speed	rpm	750	710	683	600
Heat to be dissipated[1]					
Charge air: Charge air cooler (HT stage)[2] Charge air cooler (LT stage)[2]	kJ/kWh	 1,119 616	 979 444	 852 317	 672 317
Lube oil cooler[3]		516	549	572	677
Jacket cooling		528	552	580	688
Nozzle cooling		14	14	14	15
Heat radiation engine (based on engine room temp. 55°C)		85	93	100	128
Air data					
Temperature of charge air: After compressor At charge air cooler outlet	°C	 239 61	 217 60	 199 60	 157 60
Air flow rate	kg/kWh	8.33	8.17	7.99	9.7
Charge air pressure (absolute)	bar abs	4.3	3.7	3.27	2.43
Exhaust gas data[4]					
Mass flow	kg/kWh	8.54	8.37	8.19	9.9
Temperature at turbine outlet	°C	315	317	326	282
Heat content (190°C)	kJ/kWh	1,144	1,140	1,191	968
Permissible exhaust gas back pressure after turbocharger (maximum)	mbar	50	-		
Tolerances refer to 100% load.					

[1] Tolerance: +8% for rating coolers and heat radiation, +6% for central (HT-, LT- and lube oil system), -12% for heat recovery from HT- or LT- or lube oil system.

[2] The values of the particular cylinder numbers can differ depending on the charge air cooler specification.

[3] Addition required for separator heat (e.g. 30 kJ/kWh).

[4] Tolerances: Quantity ±5%; temperature ±20°C.

Table 92: Load specific values at tropical conditions – MAN L/V32/40CD TCF IMO Tier II – Mechanical propulsion with FPP

2025-06-16 - 1.0

2.21 Planning data for emission standard: IMO Tier II – Suction dredger/pumps (mechanical drive)

Note:
Stated figures are valid for a layout of the engine supply system as defined within this documentation. Any modifications that affect the media flow from attached pumps to the engine, required media flows, temperatures or pressures need to be agreed on by MAN Energy Solutions.

2.21.1 Nominal values for cooler specification – MAN L32/40CD TCF IMO Tier II – Suction dredger/pumps (mechanical drive)

450 kW/cyl., 750 rpm – Suction dredger/pumps (mechanical drive)

Reference conditions: Tropics		
Air temperature	°C	45
Cooling water temp. before charge air cooler (LT stage)		38
Total atmospheric pressure	mbar	1,000
Relative humidity	%	60

Table 93: Reference conditions: Tropics

No. of cylinders, config.		**6L**	**7L**	**8L**	**9L**
Engine output	kW	2,700	3,150	3,600	4,050
Speed	rpm	750			
Heat to be dissipated[1)]					
Charge air: Charge air cooler (HT stage) Charge air cooler (LT stage)	kW	 877 456	 988 530	 1,146 621	 1,253 694
Lube oil cooler[2)]		392	459	523	591
Jacket cooling		394	462	526	594
Nozzle cooling		11	13	14	16
Heat radiation engine (based on engine room temp. 55°C)		63	74	84	95
Flow rates[3)]					
HT circuit (jacket cooling + charge air cooler HT)	m^3/h	36	42	48	54
LT circuit (lube oil cooler + charge air cooler LT)		57	70	74	85
Lube oil		97	108	118	129
Nozzle cooling water		1.0	1.2	1.4	1.6
Pumps					
a) Attached					
HT CW service pump	m^3/h	36	42	48	54
LT CW service pump		57	70	74	85

2025-06-16 - 1.0

No. of cylinders, config.		6L	7L	8L	9L
Lube oil service pump for application with variable speed		141	162	191	191
b) Free-standing[4]					
HT CW stand-by pump	m^3/h	36	42	48	54
HT CW service support pump		24	28	32	36
LT CW stand-by pump		Depending on plant design			
Lube oil stand-by pump		102+z	113+z	124+z	136+z
Lube oil service support pump		42	49	57	57
Prelubrication pump		19.5–22.5 +0.5z	21.5–25.0 +0.5z	23.5–27.5 +0.5z	25.5–30.0 +0.5z
Nozzle CW pump		1.0	1.2	1.4	1.6
MGO/MDO supply pump		2.1	2.4	2.8	3.1
HFO supply pump		1.1	1.3	1.5	1.7
HFO circulating pump		2.1	2.4	2.8	3.1

[1] Tolerance: +8% for rating coolers and heat radiation, +6% for central (HT-, LT- and lube oil system), -12% for heat recovery from HT- or LT- or lube oil system.

[2] Addition required for separator heat (e.g. 30 kJ/kWh).

[3] Basic values for layout design of the coolers.

[4] Tolerances of the pumps delivery capacities must be considered by the pump manufacturer.

z = flushing oil of the automatic filter.

Table 94: Nominal values for cooler specification – MAN L32/40CD TCF IMO Tier II – Suction dredger/pumps (mechanical drive)

Note:
You will find further planning data for the listed subjects in the corresponding sections.

- Minimal heating power required for preheating HT cooling water see paragraph HT cooling water preheating module (MOD-004).
- Minimal heating power required for preheating lube oil see paragraph H-002/Lube oil preheater, Page 312.
- Capacities of preheating pumps see paragraph HT cooling water preheating module (MOD-004).

2025-06-16 - 1.0

2.21.2 Nominal values for cooler specification – MAN V32/40CD TCF IMO Tier II – Suction dredger/pumps (mechanical drive)

450 kW/cyl., 750 rpm – Suction dredger/pumps (mechanical drive)

Reference conditions: Tropics		
Air temperature	°C	45
Cooling water temp. before charge air cooler (LT stage)		38
Total atmospheric pressure	mbar	1,000
Relative humidity	%	60

Table 95: Reference conditions: Tropics

No. of cylinders, config.		12V	14V	16V	18V
Engine output	kW	5,400	6,300	7,200	8,100
Speed	rpm	750			
Heat to be dissipated[1)]					
Charge air: Charge air cooler (HT stage) Charge air cooler (LT stage)	kW	 1,755 913	 1,976 1,061	 2,292 1,242	 2,507 1,389
Lube oil cooler[2)]		783	919	1,046	1,182
Jacket cooling		788	923	1,052	1,187
Nozzle cooling		22	25	29	32
Heat radiation engine (based on engine room temp. 55°C)		127	148	169	190
Flow rates[3)]					
HT circuit (jacket cooling + charge air cooler HT)	m^3/h	72	84	96	108
LT circuit (lube oil cooler + charge air cooler LT)		114	140	148	170
Lube oil		151	163	174	186
Nozzle cooling water		2.0	2.4	2.8	3.2
Pumps					
a) Attached					
HT CW service pump	m^3/h	72	84	96	108
LT CW service pump		114	140	148	170
Lube oil service pump for application with variable speed		226	226	240	282
b) Free-standing[4)]					
HT CW stand-by pump	m^3/h	72	84	96	108
HT CW service support pump		47	55	63	71
LT CW stand-by pump		Depending on plant design			
Lube oil stand-by pump		159+z	171+z	183+z	195+z

2025-06-16 - 1.0

No. of cylinders, config.		12V	14V	16V	18V
Lube oil service support pump		67	67	79	79
Prelubrication pump		30.0–35.0 +0.5z	32.5–38.0 +0.5z	35.0–41.0 +0.5z	37.5–44.0 +0.5z
Nozzle CW pump		2.0	2.4	2.8	3.2
MGO/MDO supply pump		4.1	4.8	5.4	6.1
HFO supply pump		2.2	2.5	2.9	3.3
HFO circulating pump		4.1	4.8	5.4	6.1

[1] Tolerance: +8% for rating coolers and heat radiation, +6% for central (HT-, LT- and lube oil system), -12% for heat recovery from HT- or LT- or lube oil system.

[2] Addition required for separator heat (e.g. 30 kJ/kWh).

[3] Basic values for layout design of the coolers.

[4] Tolerances of the pumps delivery capacities must be considered by the pump manufacturer.

z = flushing oil of the automatic filter.

Table 96: Nominal values for cooler specification – MAN V32/40CD TCF IMO Tier II – Suction dredger/pumps (mechanical drive)

Note:
You will find further planning data for the listed subjects in the corresponding sections.

- Minimal heating power required for preheating HT cooling water see paragraph HT cooling water preheating module (MOD-004).
- Minimal heating power required for preheating lube oil see paragraph H-002/Lube oil preheater, Page 312.
- Capacities of preheating pumps see paragraph HT cooling water preheating module (MOD-004).

2025-06-16 - 1.0

2.21.3 Flow scheme for cooler specification – MAN L/V32/40CD TCF IMO Tier II

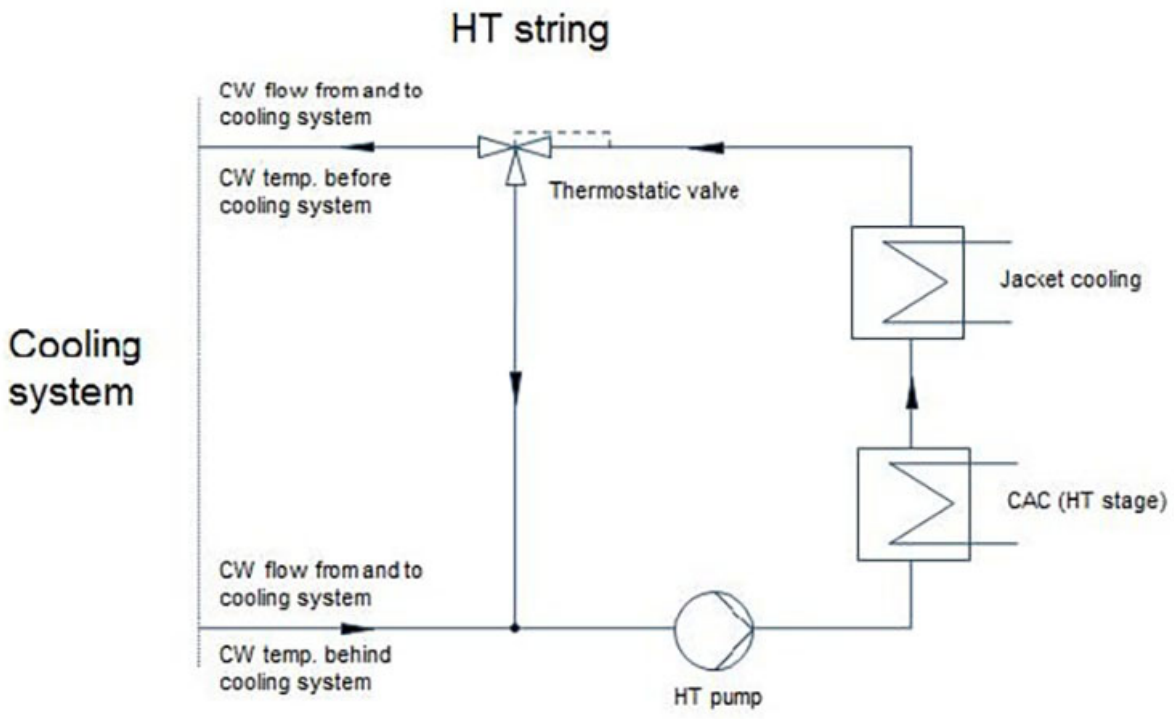

Figure 49: Flow scheme 2-string-HT-thermostat - MAN L/V32/40CD TCF, exemplary

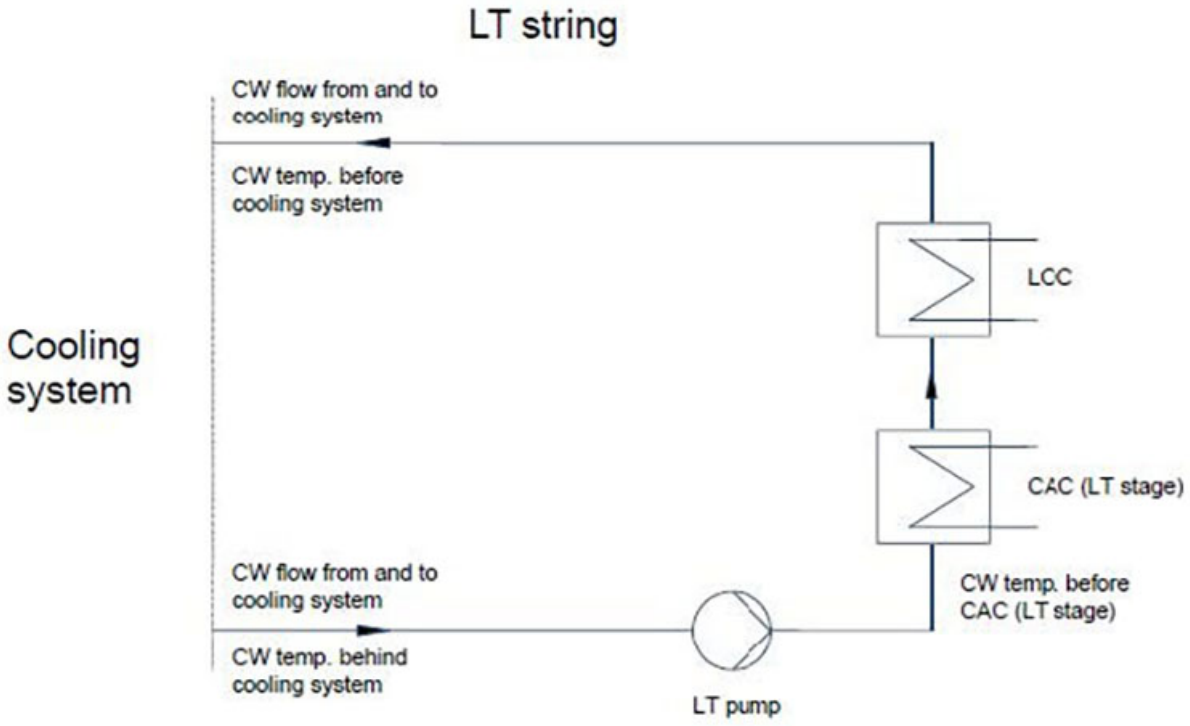

Figure 50: Flow scheme 2-string-LT-thermostat - MAN L/V32/40CD TCF, exemplary

2025-06-16 - 1.0

2.21.4 Temperature basis, nominal air and exhaust gas data – MAN L32/40CD TCF IMO Tier II – Suction dredger/pumps (mechanical drive)

450 kW/cyl., 750 rpm – Suction dredger/pumps (mechanical drive)

Reference conditions: Tropics		
Air temperature	°C	45
Cooling water temp. before charge air cooler (LT stage)		38
Total atmospheric pressure	mbar	1,000
Relative humidity	%	60

Table 97: Reference conditions: Tropics

No. of cylinders, config.		6L	7L	8L	9L
Engine output	kW	2,700	3,150	3,600	4,050
Speed	rpm	750			
Temperature basis					
HT cooling water engine outlet[1]	°C	90			
LT cooling water air cooler inlet		38 (setpoint 32°C)[2]			
Lube oil engine inlet		65			
Nozzle cooling water engine inlet		60			
Air data					
Temperature of charge air at charge air cooler outlet	°C	61	62	61	62
Air flow rate[3]	m^3/h	20,574	24,001	27,432	30,857
Mass flow	t/h	22.5	26.3	30	33.8
Charge air pressure (absolute)	bar abs	4.32	4.33	4.32	4.33
Air required to dissipate heat radiation (engine) ($t_2 - t_1$ = 10°C)	m^3/h	20,355	23,748	27,140	30,533
Exhaust gas data[4]					
Volume flow (temperature turbocharger outlet)[5]	m^3/h	39,025	45,588	52,052	58,620
Mass flow	t/h	23.1	26.9	30.8	34.6
Temperature at turbine outlet	°C	315	316	316	316
Heat content (190°C)	kW	860	1,010	1,149	1,299
Permissible exhaust gas back pressure after turbocharger (maximum)	mbar	50			

[1] HT cooling water flow first through water jacket and cylinder head, then through HT stage charge air cooler.

[2] For design see figure Cooling water system diagram – Twin engine plant, Page 346.

[3] Under mentioned above reference conditions.

[4] Tolerances (exhaust gas data): ±20°C for temperature at turbine outlet, ±10% for flow quantity.

[5] Calculated based on stated temperature at turbine outlet and total atmospheric pressure according mentioned above reference conditions.

Table 98: Temperature basis, nominal air and exhaust gas data – MAN L32/40CD TCF IMO Tier II – Suction dredger/pumps (mechanical drive)

2025-06-16 - 1.0

2.21.5 Temperature basis, nominal air and exhaust gas data – MAN V32/40CD TCF IMO Tier II – Suction dredger/pumps (mechanical drive)

450 kW/cyl., 750 rpm – Suction dredger/pumps (mechanical drive)

Reference conditions: Tropics		
Air temperature	°C	45
Cooling water temp. before charge air cooler (LT stage)		38
Total atmospheric pressure	mbar	1,000
Relative humidity	%	60

Table 99: Reference conditions: Tropics

No. of cylinders, config.		12V	14V	16V	18V
Engine output	kW	5,400	6,300	7,200	8,100
Speed	rpm	750			
Temperature basis					
HT cooling water engine outlet[1]	°C	90			
LT cooling water air cooler inlet		38 (setpoint 32°C)[2]			
Lube oil engine inlet		65			
Nozzle cooling water engine inlet		60			
Air data					
Temperature of charge air at charge air cooler outlet	°C	61	62	61	62
Air flow rate[3]	m^3/h	41,149	48,001	54,863	61,715
Mass flow	t/h	45	52.5	60	67.5
Charge air pressure (absolute)	bar abs	4.32	4.33	4.32	4.33
Air required to dissipate heat radiation (engine) ($t_2 - t_1$ = 10°C)	m^3/h	40,71	47,496	54,281	61,066
Exhaust gas data[4]					
Volume flow (temperature turbocharger outlet)[5]	m^3/h	74,030	91,153	104,078	117,210
Mass flow	t/h	46.2	53.8	51.5	69.2
Temperature at turbine outlet	°C	315	316	316	316
Heat content (190°C)	kW	1,719	2,019	2,296	2,597
Permissible exhaust gas back pressure after turbocharger (maximum)	mbar	50			

[1] HT cooling water flow first through water jacket and cylinder head, then through HT stage charge air cooler.

[2] For design see figure Cooling water system diagram – Twin engine plant, Page 346.

[3] Under mentioned above reference conditions.

[4] Tolerances (exhaust gas data): ±20°C for temperature at turbine outlet, ±10% for flow quantity.

[5] Calculated based on stated temperature at turbine outlet and total atmospheric pressure according mentioned above reference conditions.

Table 100: Temperature basis, nominal air and exhaust gas data – MAN V32/40CD TCF IMO Tier II – Suction dredger/pumps (mechanical drive)

2025-06-16 - 1.0

2.21.6 Load specific values at ISO conditions – MAN L/V32/40CD TCF IMO Tier II – Suction dredger/pumps (mechanical drive)

450 kW/cyl., 750 rpm – Suction dredger/pumps (mechanical drive)

Reference conditions: ISO		
Air temperature	°C	25
Cooling water temp. before charge air cooler (LT stage)		25
Total atmospheric pressure	mbar	1,000
Relative humidity	%	30

Table 101: Reference conditions: ISO

Engine output	%	100	85	75	50
Speed	rpm	750			
Heat to be dissipated[1]					
Charge air: Charge air cooler (HT stage)[2] Charge air cooler (LT stage)[2]	kJ/kWh	 950 553	 843 513	 732 475	 392 421
Lube oil cooler[3]		446	500	532	702
Jacket cooling		470	495	519	613
Nozzle cooling		14	14	14	15
Heat radiation engine (based on engine room temp. 35°C)		109	120	129	166
Air data					
Temperature of charge air: After compressor At charge air cooler outlet	°C	 214 46	 192 46	 175 46	 128 46
Air flow rate	kg/kWh	8.74	9.06	9.16	9.7
Charge air pressure (absolute)	bar abs	4.36	3.8	3.4	2.39
Exhaust gas data[4]					
Mass flow	kg/kWh	8.94	9.26	9.36	9.91
Temperature at turbine outlet	°C	280	273	273	291
Heat content (190°C)	kJ/kWh	854	818	825	1,060
Permissible exhaust gas back pressure after turbocharger (maximum)	mbar	50	-		
Tolerances refer to 100% load.					

[1] Tolerance: +8% for rating coolers and heat radiation, +6% for central (HT-, LT- and lube oil system), -12% for heat recovery from HT- or LT- or lube oil system.

[2] The values of the particular cylinder numbers can differ depending on the charge air cooler specification.

[3] Addition required for separator heat (e.g. 30 kJ/kWh).

[4] Tolerances: Quantity ±5%; temperature ±20°C.

Table 102: Load specific values at ISO conditions – MAN L/V32/40CD TCF IMO Tier II – Suction dredger/pumps (mechanical drive)

2025-06-16 - 1.0

2.21.7 Load specific values at tropical conditions – MAN L/V32/40CD TCF IMO Tier II – Suction dredger/pumps (mechanical drive)

450 kW/cyl., 750 rpm – Suction dredger/pumps (mechanical drive)

Reference conditions: Tropics		
Air temperature	°C	45
Cooling water temp. before charge air cooler (LT stage)		38
Total atmospheric pressure	mbar	1,000
Relative humidity	%	60

Table 103: Reference conditions: Tropics

Engine output	**%**	**100**	**85**	**75**	**50**
Speed	**rpm**	**750**			
Heat to be dissipated[1]					
Charge air: Charge air cooler (HT stage)[2] Charge air cooler (LT stage)[2]	kJ/kWh	 1,146 621	 1,044 502	 934 369	 601 294
Lube oil cooler[3]		523	584	622	820
Jacket cooling		526	552	578	683
Nozzle cooling		14	14	14	15
Heat radiation engine (based on engine room temp. 55°C)		85	93	100	129
Air data					
Temperature of charge air: After compressor At charge air cooler outlet	°C	 243 61	 220 60	 201 60	 152 60
Air flow rate	kg/kWh	8.34	8.65	8.74	9.26
Charge air pressure (absolute)	bar abs	4.32	3.76	3.36	2.36
Exhaust gas data[4]					
Mass flow	kg/kWh	8.55	8.86	8.95	9.48
Temperature at turbine outlet	°C	499	472	455	427
Heat content (190°C)	kJ/kWh	1,149	1,115	1,125	1,383
Permissible exhaust gas back pressure after turbocharger (maximum)	mbar	50	-		
Tolerances refer to 100% load.					

[1] Tolerance: +8% for rating coolers and heat radiation, +6% for central (HT-, LT- and lube oil system), -12% for heat recovery from HT- or LT- or lube oil system.

[2] The values of the particular cylinder numbers can differ depending on the charge air cooler specification.

[3] Addition required for separator heat (e.g. 30 kJ/kWh).

[4] Tolerances: Quantity ±5%; temperature ±20°C.

Table 104: Load specific values at tropical conditions – MAN L/V32/40CD TCF IMO Tier II – Suction dredger/pumps (mechanical drive)

2025-06-16 - 1.0

2.22 Operating/service temperatures and pressures

Ambient air

	Min.	Max.
Ambient air temperature (outside vessel)	0°C[1]	45°C[2]
[1] Conditions below this temperature are defined as "arctic conditions" – see section Engine operation under arctic conditions, Page 73.		
[2] In accordance with power definition. A reduction in power is required at higher temperatures.		

Table 105: Ambient air

Engine room air

	Min.	Max.
Engine room air temperature	0°C recommended: 5°C[1]	55°C[2]
[1] Recommendation given to avoid any possibility for ice formation. In general it can be assumed that the air temperature in the area of the engine and attached components will be 5–10 K above the ambient air temperature outside the engine room.		
[2] Air temperatures at the engine > 55°C are not permissible.		

Table 106: Engine room air

Intake air (conditions before compressor of turbocharger)

	Connection number internal media schemata "Charge air and exhaust gas diagram"	Min.	Max.
Intake air temperature compressor inlet	TE6100	0°C[1]	45°C[2]
Intake air pressure compressor inlet	PT6100	–20 mbar	-
[1] Conditions below this temperature are defined as "arctic conditions" – see section Engine operation under arctic conditions, Page 73. External intake air supply to be applied in this case.			
[2] In accordance with power definition. A reduction in power is required at higher temperatures/lower pressures.			

Table 107: Intake air (conditions before compressor of turbocharger)

Charge air (conditions within charge air pipe before cylinder)

	Connection number internal media schemata "Charge air and exhaust gas diagram"	Min.	Max.
Charge air temperature cylinder inlet[1]	TE6180	43°C	59°C
[1] Aim for a higher value in conditions of high air humidity (to reduce condensate amount).			

Table 108: Charge air (conditions within charge air pipe before cylinder)

2025-06-16 - 1.0

HT cooling water – Engine

	Connection number internal media schemata "Cooling water system"	Min.	Max.
HT cooling water temperature at jacket cooling outlet[1]	3199, TE3180	90°C nominal[2]	95°C[3]
HT cooling water temperature engine inlet – Preheated before start	3161, 3105, TE3170	60°C	90°C
HT cooling water pressure engine inlet; nominal value 4 bar[4]	3161, 3105, PT3170	3 bar	6 bar
Pressure loss engine (total, for nominal flow rate)	-	-	1.35 bar
Only for information: Pressure loss engine (without charge air cooler) Pressure loss HT piping engine Pressure loss charge air cooler (HT stage)	-	 0.3 bar 0.2 bar 0.2 bar	 0.5 bar 0.45 bar 0.4 bar
Pressure rise attached HT cooling water pump (optional)	-	3.2 bar	3.8 bar

[1] SaCoSone measuring point is jacket cooling outlet of the engine.

[2] Regulated temperature.

[3] Operation at alarm level.

[4] SaCoSone measuring point is jacket cooling inlet.

Table 109: HT cooling water – Engine

HT cooling water – Plant

	Min.	Max.
Permitted pressure loss of external HT system (plant)	-	1.85 bar
Minimum required pressure rise of free-standing HT cooling water stand-by pump (plant)	3.2 bar	-
Cooling water expansion tank Pre-pressure due to expansion tank at suction side of cooling water pump Pressure loss from expansion tank to suction side of cooling water pump	 0.6 bar -	 0.9 bar 0.1 bar

Table 110: HT cooling water – Plant

2025-06-16 - 1.0

LT cooling water – Engine

	Connection number Internal media schemata "Cooling water system"	Min.	Max.
LT cooling water temperature charge air cooler inlet (LT stage)	4171, TE4170	32°C[1]	38°C[2]
LT cooling water pressure charge air cooler inlet (LT stage); nominal value 4 bar	4171, PT4170	2 bar	6 bar
Pressure loss charge air cooler (LT stage, for nominal flow rate) Only for information: Pressure loss LT piping engine Pressure loss charge air cooler (LT stage)	-	- 0.2 bar 0.1 bar	0.6 bar 0.3 bar 0.3 bar
Pressure rise attached LT cooling water pump (optional)	-	3.0 bar	4.0 bar

[1] Regulated temperature.

[2] In accordance with power definition. A reduction in power is required at higher temperatures/lower pressures.

Table 111: LT cooling water – Engine

LT cooling water – Plant

	Min.	Max.
Permitted pressure loss of external LT system (plant)	-	2.4 bar
Minimum required pressure rise of free-standing LT cooling water stand-by pump (plant)	3.0 bar	-
Cooling water expansion tank: Pre-pressure due to expansion tank at suction side of cooling water pump Pressure loss from expansion tank to suction side of cooling water pump	 0.6 bar -	 0.9 bar 0.1 bar

Table 112: LT cooling water – Plant

Nozzle cooling water

	Connection number internal media schemata "Cooling water system"	Min.	Max.
Nozzle cooling water temperature engine inlet	3471, TE3470	55°C	70°C[1]
Nozzle cooling water pressure engine inlet: Open system Closed system	 3471, PT3470 3471, PT3470	 2 bar 3 bar	 3 bar 5 bar
Pressure loss engine (fuel nozzles, for nominal flow rate)	-	-	1.5 bar

[1] Operation at alarm level.

Table 113: Nozzle cooling water

2025-06-16 - 1.0

Lube oil

	Connection number internal media schemata "Lubricating oil diagram"	Min.	Max.
Lube oil temperature engine inlet	2171, TE2170	65°C[1]	70°C[2]
Lube oil temperature engine inlet – Preheated before start	2171, TE2170	40°C	65°C[3]
Lube oil pressure (during engine operation) Engine inlet Turbocharger inlet	 2171, PT2170 PT2570	 4 bar 1.3 bar	 5 bar 2.2 bar
Prelubrication/postlubrication (duration ≤ 10 min) lube oil pressure Engine inlet Turbocharger inlet	 2171, PT2170 PT2570	 0.3 bar[4] 0.2 bar	 5 bar 2.2 bar
Prelubrication/postlubrication (duration > 10 min) lube oil pressure Engine inlet Turbocharger inlet	 2171, PT2170 PT2570	 0.3 bar[4] 0.2 bar	 0.6 bar 0.6 bar
Lube oil pump (attached, free-standing) Design pressure Opening pressure safety valve	-	 7 bar -	 - 8 bar

[1] Regulated temperature.

[2] Operation at alarm level.

[3] If higher temperatures of lube oil in system will be reached, e.g. due to lube oil separator operation, at engine start this temperature needs to be reduced as quickly as possible below alarm level to avoid a start failure.

[4] Note: Oil pressure > 0.3 bar must be ensured also for lube oil temperatures up to 70°C.

Table 114: Lube oil

2025-06-16 - 1.0

Fuel

	Connection number internal media schemata "Fuel system"	Min.	Max.
Fuel temperature engine inlet MGO (DMA) and MDO (DMB) according ISO 8217 HFO according ISO 8217	 5671, TE5070 5671, TE5070	 –10°C[1)] -	 45°C[2)] 150°C[2)]
Fuel viscosity engine inlet MGO (DMA) and MDO (DMB) according ISO 8217 HFO according ISO 8217	-	 1.9 cSt 1.9 cSt	 14.0 cSt 14.0 cSt
Fuel pressure engine inlet	5671, PT5070	5.0 bar	8.0 bar
Fuel pressure engine inlet in case of black out (only engine start idling)	5671, PT5070	0.6 bar	-
Differential pressure (engine inlet/engine outlet)	-	1.0 bar	-
Fuel return, fuel pressure engine outlet	5699	2.0 bar	-
Maximum pressure variation at engine inlet	-	-	±0.5 bar
HFO supply system Minimum required pressure rise of free-standing HFO supply pump (plant) Minimum required pressure rise of free-standing HFO circulating pump (booster pumps, plant) Minimum required absolute design pressure free-standing HFO circulating pump (booster pumps, plant)	-	 7.0 bar 7.0 bar 10.0 bar	 - - -
MDO/MGO supply system Minimum required pressure rise of free-standing MDO/MGO supply pump (plant)	-	 10.0 bar	 -
Fuel temperature within HFO day tank (preheating)	-	-[3)]	90°C[4)]

[1)] Maximum viscosity not to be exceeded. “Pour point” and “Cold filter plugging point” have to be observed.

[2)] Not permissible to fall below minimum viscosity.

[3)] Minimum temperature to be considered for an optimum transfer by pumps to attached tanks.

[4)] If flash point is below 100°C, than the limit is: 10 degree distance to the flash point.

Table 115: Fuel

2025-06-16 - 1.0

Compressed air in the starting air system

	Connection number internal media schemata "Pressure air system"	Min.	Max.
Starting air pressure	7171, PT7170	15.0 bar[1]	30.0 bar[2] [3]
Alarm emergency stop air pressure	PT7180	10.0 bar[4]	-
Jet assist pressure engine inlet	7177	18.0 bar[5]	30.0 bar

[1] Operation at alarm level. Engine start possible down to "Alarm emergency stop air pressure".

[2] Nominal value.

[3] For layout of the starting air system, note:

- Starting air consumption and start duration stated within section Starting air and control air consumption, Page 103.
- Maximum velocity (m/s) see section External pipe dimensioning, Page 294 - consider multiple start of engines, if needed.

[4] Within calculation of starting air vessels this value must not be undershot.

[5] Below this value jet assist will be deactivated.

Table 116: Compressed air in the starting air system

Compressed air in the control air system

	Connection number internal media schemata "Pressure air system"	Min.	Max.
Control air pressure engine inlet	7172, PT7400	5.5 bar[1]	7.0 bar

[1] Operation at alarm level.

Table 117: Compressed air in the control air system

Crankcase pressure (engine)

	Connection number internal media schemata "Lubricating oil diagram"	Min.	Max.
Pressure within crankcase	2898, PT2800	–2.5 mbar	3.0 mbar

Table 118: Crankcase pressure (engine)

	Connection number internal media schemata "Lubricating oil diagram"	Setting
Safety valve attached to the crankcase (opening pressure)	-	50–70 mbar

Table 119: Safety valve

2025-06-16 - 1.0

Exhaust gas

	Min.	Max.
Exhaust gas temperature turbine outlet (normal operation under tropic conditions)	-	415°C
Exhaust gas temperature turbine outlet (with SCR within regeneration mode)	360°C	400°C
Exhaust gas temperature turbine outlet (emergency operation – According classification rules – One failure of TC)	-	546°C
Recommended design exhaust gas temperature turbine outlet for layout of exhaust gas line (plant)	450°C[1)]	-
Minimum exhaust gas temperature after recooling due to exhaust gas heat utilization	190°C[2)]	-
Exhaust gas back pressure after turbocharger (static)	-	50 mbar[3)]

[1)] Project specific evaluation required, figure given as minimum value for guidance only.

[2)] To avoid sulfur corrosion in exhaust gas line (plant).

[3)] If this value is exceeded by the total exhaust gas back pressure of the designed exhaust gas line, sections Derating, definition of P Operating, Page 50 and Increased exhaust gas pressure due to exhaust gas after treatment installations, Page 52 need to be considered.

Table 120: Exhaust gas

Note:
Operating pressures without further specification are below/above atmospheric pressure.

2025-06-16 - 1.0

2.23 Leakage rate

Maximum operating leakage high pressure pumps		Maximum operating leakage injection nozzles		Burst leakage rate in case of pipe break (for max. 1 min)
l/h per cyl.		l/h per cyl.		l/min for each cyl. bank
HFO	MGO/MDO	HFO	MGO/MDO	HFO, MGO/MDO
0.4	1.0	0.5	1.0	4.0

Table 121: Leakage rate – 32/40CD TCF with SP injection pumps

Note:

- High flow rates of dirty leakage oil will only occur in case of a pipe break and should occur for short time only. An alarm will be activated (< 1 min) and the operator must take actions. Special considerations have to be taken for the layout of single engine plants.
  This leakage can be reused, if the entire fuel treatment of separation and filtration is done.
- The operating leakage (clean) consists out of the operating leakage amount of the high-pressure pumps, plus the operating leakage of the injection valves, which occur during normal operation due to their function. This leakage can be reused, if the entire fuel treatment of separation and filtration is done.
- All other leakage amounts (dirt fuel oil from filters or from engine drains) have to be discharged into the sludge tank.

2.24 Filling volumes

Cooling water and oil volume – Turbocharger at counter coupling side[1]									
No. of cylinders		6	7	8	9	12	14	16	18
HT cooling water[2] approx.	litre	151	175	202	226	303	351	403	453
LT cooling water[3] approx.		46	49	51	52	92	99	101	105
Lube oil		Dry oil sump[4]							
Cooling water and oil volume – Turbocharger at coupling side[1]									
HT cooling water[2] approx.	litre	176	203	232	260	353	406	464	521
LT cooling water[3] approx.		34	37	38	40	67	74	76	79
Lube oil		Dry oil sump[4]							

[1] Be aware: This is just the amount inside the engine. By this amount the level in the service or expansion tank will be lowered when media systems are put in operation.

[2] HT water volume engine: HT part of charge air cooler, cylinder unit, piping.

[3] LT water volume engine: LT part of charge air cooler, piping.

[4] Due to the dry oil sump after engine stop the total amount will flow into the lube oil service tank.

Table 122: Cooling water and oil volume of engine

2025-06-16 - 1.0

Service tanks	Installation height[1]	Recommended dimensions for single engine plants. Values to be adapted for multi engine plants. (for guidance only)						
	m	m^3						
No. of cylinders		6	7	8	9	12	14	16
HT expansion tank (T-002)	6 – 9	0.75		1.0		1.25		1.5
LT expansion tank (T-075)		0.5		0.7		0.85		1.0
HT/LT expansion tank (T-103)[2]		1.25		1.7		2.1		2.5
Return line from HT expansion tank		DN 32				DN 40		
Return line from LT expansion tank		DN 40				DN 50		
Return line from HT/LT expansion tank[2]		DN 50				DN 65		
Lube oil service tank		7.2	8.4	9.6	10.8	14.4	16.8	19.2

In general we recommend a minimum total tank volume for the expansion tanks as follows:

HT expansion tank (T-002): 15 % of the total HT cooling water volume per system.

LT expansion tank (T-075): 8 % of the total LT cooling water volume per system.

HT/LT expansion tank (T-103)[2]: 10 % of the total HT- and LT cooling water volume per system.

To cover leakages in the system, we recommend a safety margin of 20 % to the above mentioned minimum tank volumes.

[1] Level difference tank bottom to engine crankshaft center line.

[2] In case of common cooling water system for HT and LT.

Table 123: Service tanks capacities

2.25 Venting amount of crankcase and turbocharger

A ventilation of the engine crankcase and the turbochargers is required, as described in section Crankcase vent and tank vent, Page 332.

For the layout of the ventilation system guidance is provided below:

Due to normal blow-by of the piston ring package small amounts of combustion chamber gases get into the crankcase and carry along oil mist.

- The amount of crankcase blow-by air is approximately 0.1% of the engine´s air flow rate.

In addition, the sealing air of the turbocharger needs to be vented.

- The amount of turbocharger blow-by air is approximately:
  - For single-stage turbocharged engines 0.2% of the engine´s air flow rate. (Accordingly see Planning data, Page 107).
  - For two-stage turbocharged engines 0.4% of the engine´s air flow rate. (Accordingly see Planning data, Page 107).
- The temperature of the crankcase and turbocharger blow-by air is approximately 15 K higher than the oil temperature at the engine´s oil inlet.
- The density of the crankcase and turbocharger blow-by air is 1.0 kg/m³ at the condition of approximately 70°C (343 K) and 1,013 mbar (assumption for calculation).

2025-06-16 - 1.0

2.26 Exhaust gas emission

2.26.1 Maximum permissible NOx emission limit value IMO Tier II and IMO Tier III

IMO Tier III: Engine in standard version[1]

Rated speed	720 rpm	750 rpm
NO_x [1) 2) 3)]		
IMO Tier II cycle D2/E2/E3	9.68 g/kWh[4)]	9.59 g/kWh[4)]
IMO Tier III cycle D2/E2/E3	2.41 g/kWh[4)]	2.39 g/kWh[4)]

Note:
The engine´s certification for compliance with the NO_x limits will be carried out during factory acceptance test according engine group concept.

[1)] Cycle values, operation on DM grade fuel (marine distillate fuel: MGO or MDO) according ISO 8217, based on a LT charge air cooling water temperature of 32 °C at 25 °C reference seawater temperature.

[2)] Calculated as NO_2.

D2: Test cycle for "constant-speed auxiliary engine application".

E2: Test cycle for "constant-speed main propulsion application" including electric propulsion and all controllable pitch propeller installations.

E3: Test cycle for "propeller-law-operated main and propeller-law-operated auxiliary engine" application.

[3)] Based on a LT charge air cooling water temperature of 32 °C at 25 °C seawater temperature.

[4)] Maximum allowed NO_x emissions for marine diesel engines according to
IMO Tier II:
$130 \leq n \leq 2{,}000 \rightarrow 44 * n^{-0.23}$ g/kWh (n = rated engine speed in rpm)

IMO Tier III:
$130 \leq n \leq 2{,}000 \rightarrow 9 * n^{-0.2}$ g/kWh (n = rated engine speed in rpm).

Table 124: Maximum permissible NO_x emission limit value

[1] Marine engines are guaranteed to meet the requirements of MARPOL Annex VI, regulations for the prevention of air pollution from ships, as amended.

2.26.2 Smoke emission index (FSN)

Smoke index FSN for engine loads ≥ 25% load well below limit of visibility (0.4 FSN).

Valid for:

- Distillate fuel according to ISO 8217 or RM-grade fuel, fulfilling the stated quality requirements.
- 50 mbar exhaust gas back pressure (at 100% output).

SCR regeneration phase

Dependent on the ambient conditions during the regeneration phase of the SCR the smoke emission index may be increased.

2025-06-16 - 1.0

2.26.3 Exhaust gas – possible components and visibility

The exhaust gas of reciprocating internal combustion engines is composed of numerous constituents. These are derived from either the combustion air and fuel and lube oil used, or they are reaction products, formed during the combustion process. Only some of these are to be considered as harmful substances.

The following listed exhaust gas components need to be seen as a general overview – the presence and amount of the singular component depends in large extends on the engine type, combustion process and fuel type.

Nitrogen N_2

Nitrogen (N_2) is with approximately 73–75 vol-% the main constituent of the exhaust gas.

Oxygen O_2

Approximately 21 vol-% of the ambient air is Oxygen (O_2).

Carbon dioxide CO_2

Carbon dioxide (CO_2) is a product of combustion.

Water vapour H_2O

The water in the exhaust comes from the combustion of the fuel and, to a lesser extent, from the moisture in the intake air. In diesel operation, the water vapour content is approximately 6 vol-%, in gas operation approximately 10 vol-%.

Inert gases Ar, Ne, He, etc.

Inert gases, such as Ar, Ne, He, etc., are constituents of the ambient air with a volume fraction of approximately 0.9 vol-%.

Sulphur oxides SO_X

Sulphur oxides (SO_x) are formed by the combustion of the sulphur contained in the fuel. The sulphur content in the fuel determines the SO_2 content in the exhaust gas.

Nitrogen oxides NO_X ($NO + NO_2$)

The high temperatures prevailing in the combustion chamber of an internal combustion engine cause the chemical reaction of nitrogen (contained in the combustion air as well as in some types of fuel) and oxygen (contained in the combustion air) to form nitrogen oxides (NO_X).

Carbon monoxide CO

Carbon monoxide (CO) is formed during incomplete combustion.

Hydrocarbons HC

The hydrocarbons (HC) contained in the exhaust gas are composed of a multitude of various organic compounds as a result of incomplete combustion.

2025-06-16 - 1.0

Particulate matter PM

Particulate matter (PM) consists of soot (elemental carbon) and ash.

Formaldehyde CH_2O

Formaldehyde (CH_2O) is a gas known by its pungent smell. Its proportion in the exhaust gas depends on the fuel and the degree of combustion. If the proportion of formaldehyde (CH_2O) is high, it can be removed by an oxidation catalyst – this is only necessary for gas or methanol operation.

Nitrous oxide N_2O

Nitrous oxide (N_2O) is a gas that only might occur in relevant quantity in ammonia (NH_3) operation.

Visibility of the exhaust gas

The visibility of exhaust gas highly depends on ambient conditions and the observer's line of sight to the exhaust gas, background and the sun. The exhaust gas can either be seen or not depending on the ambient temperature, wind velocity, diameter and height of the chimney and the colouring of the background. It can be black, blue, brown, yellow or white depending on the components present in the exhaust gas. Black or gray exhaust gas is mainly due to the presence of carbon particles. A blue appearance is usually due to droplets resulting from the incomplete combustion of fuel or lubricating oil. A yellow or brown appearance can be caused by the presence of NO_2 in the exhaust gas. White exhaust gas may be caused by condensed water and/or liquid fuel.

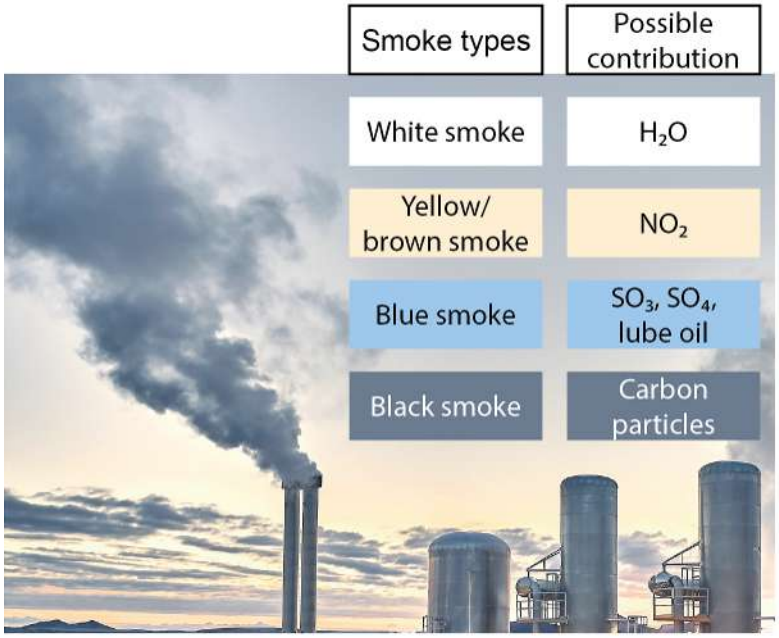

Figure 51: Possible components of the exhaust gas – Visibility

2025-06-16 - 1.0

2.26.4 Emission-related installation instruction for engines

Position of the exhaust gas sampling points

The sampling position shall be fitted:

- At least 10 times the diameter of the exhaust pipe after the outlet of the engine, turbocharger or last after-treatment device
- In a straight pipe segment:
  - With an inlet path length before sampling position of at least 5 times the diameter of the exhaust pipe after last bending/obstruction/diameter deviation
  - With a path length after sampling position of at least 2 times the diameter of the exhaust pipe
- At least 5 times the diameter of the exhaust pipe before end of exhaust pipe
- Sufficiently close to the engine to ensure that the exhaust gas temperature at the sampling position will be minimum 180°C

If this is not attainable, a deviation of these requirements is acceptable if:

- justified by good engineering practice
- an incorrect measurement is not expected

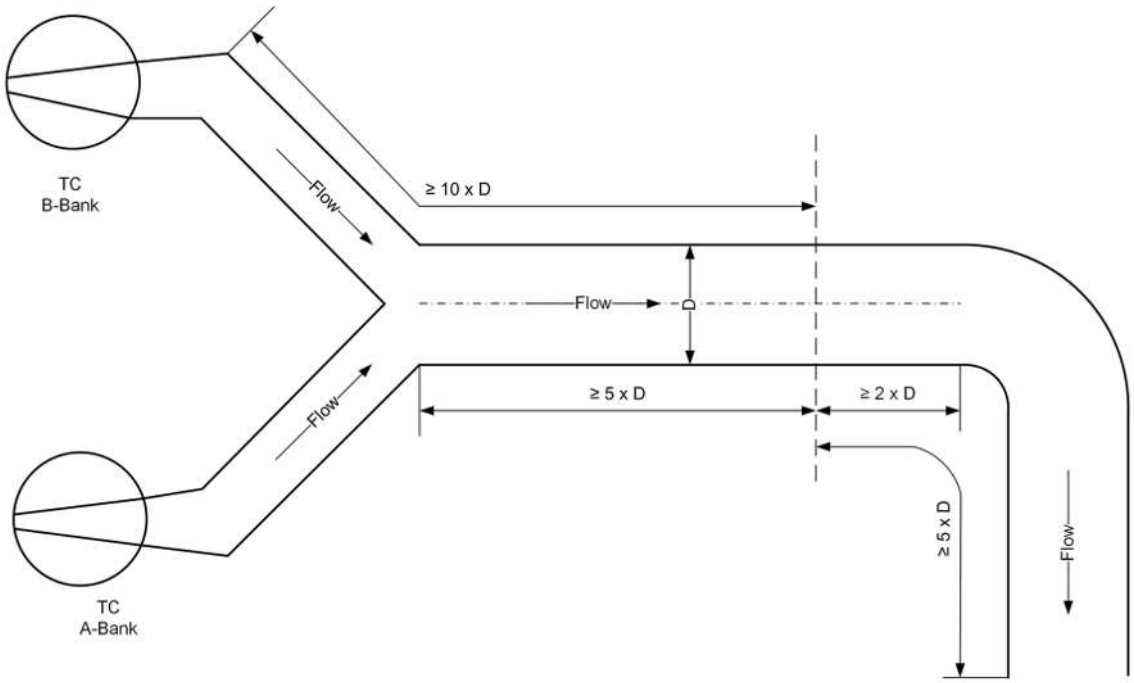

Figure 52: Position of sampling points (exemplary)

In the case an engine has distinct groups of manifolds, it is permissible to acquire a sample from each group individually and calculate an average exhaust emission. In this case, each sampling point must be designed as mentioned above.

The exhaust gas upstream the sampling point shall be free of any dilution from surrounding air or contamination from other exhaust gas systems.

2025-06-16 - 1.0

Accessibility and working area at sampling point

The sampling point shall be accessible in a save way also during engine operation. In case the sampling point is covered by an insulation, the position shall be clearly visible marked on the insulation. The Insulation shall be designed in a way that it is easy to remove and to install again.

If necessary, a step has to be established.

There shall be enough space to place and operate the measurement equipment.

Requirements regarding the working area:

- Minimum space requirements: about 2-m width, 2-m depth, 2-m height
- Sufficient floor load capacity (at least 200 kg per m²)
- Temperature at this working area should be within +5°C to + 40°C and well ventilated
- Not subjected to excessive vibrations
- If needed weather protection for personnel and equipment against sun, wind and rain

Depending on the measurement equipment it should be considered that during the measurements following items are available at the working area:

- Adequate lighting and ventilation
- Power supply
- Pressurised air (instrument quality, oil free)
- Lifting devices for raising and lowering the equipment, if necessary

Exhaust pipe connection

- 1 piece of pipe thread inner diameter G 3” (use for particulate measurements)
- 2 pieces of pipe thread inner diameter G ½" (use for gaseous emission measurements or for smoke number measurement)

2025-06-16 - 1.0

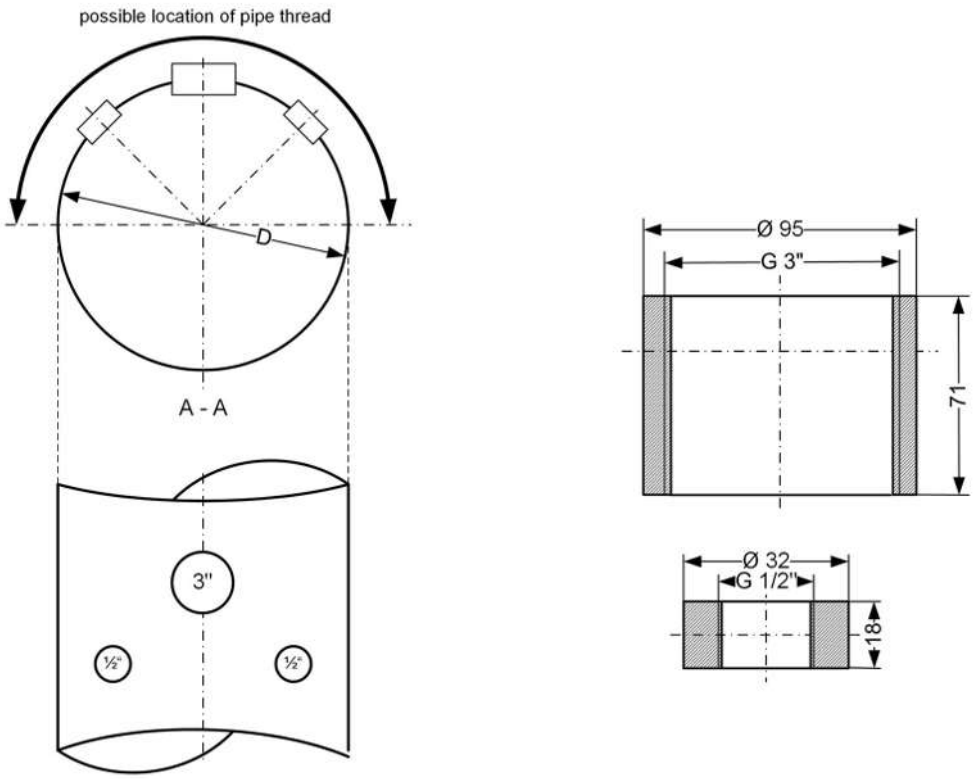

Figure 53: Sampling point, details

Installation of pipe thread G 3" and G ½"

To establish an airtight connection, the pipe threads shall be welded at the exhaust gas pipe. In case of a horizontal orientated exhaust gas pipe the position shall be in the upper half of the exhaust gas pipe in radial direction to the centre line and easy to access.

When the sampling points are not in use, a pipe plug shall close the pipe threads.

2025-06-16 - 1.0

2.27 Noise

2.27.1 Airborne noise

L engine

Sound pressure level Lp

Measurements

Approximately 20 measuring points at 1 metre distance from the engine surface are distributed evenly around the engine according to ISO 6798. The noise at the exhaust outlet is not included, but provided separately in the following sections.

Octave level diagram

The expected sound pressure level Lp is below 106 dB(A) at 100% MCR.

The octave level diagram below represents an envelope of averaged measured spectra for comparable engines at the testbed and is a conservative spectrum consequently. No room correction is performed. The data will change depending on the acoustical properties of the environment.

Blow-off noise

Blow-off noise is not considered in the measurements, see below.

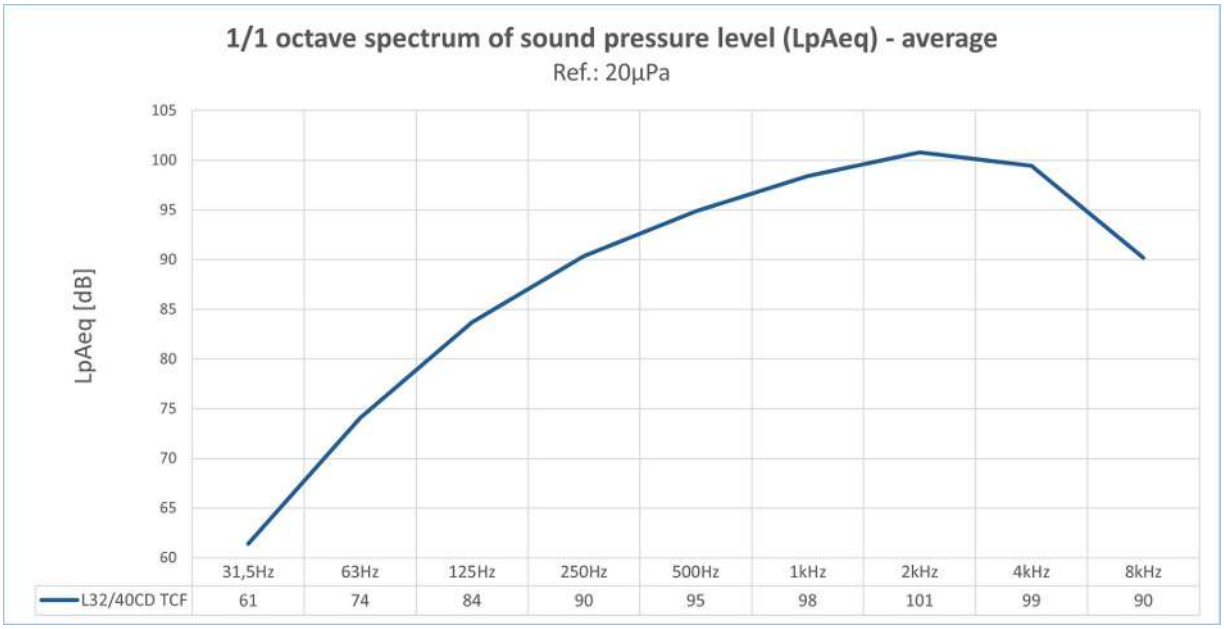

Figure 54: Airborne noise – Sound pressure level Lp – Octave level diagram L engine

V engine

Sound pressure level Lp

Measurements

Approximately 20 measuring points at 1 metre distance from the engine surface are distributed evenly around the engine according to ISO 6798. The noise at the exhaust outlet is not included, but provided separately in the following sections.

Octave level diagram

The expected sound pressure level Lp is below 108 dB(A) at 100% MCR.

The octave level diagram below represents an envelope of averaged measured spectra for comparable engines at the testbed and is a conservative spectrum consequently. No room correction is performed. The data will change depending on the acoustical properties of the environment.

Blow-off noise

Blow-off noise is not considered in the measurements, see below.

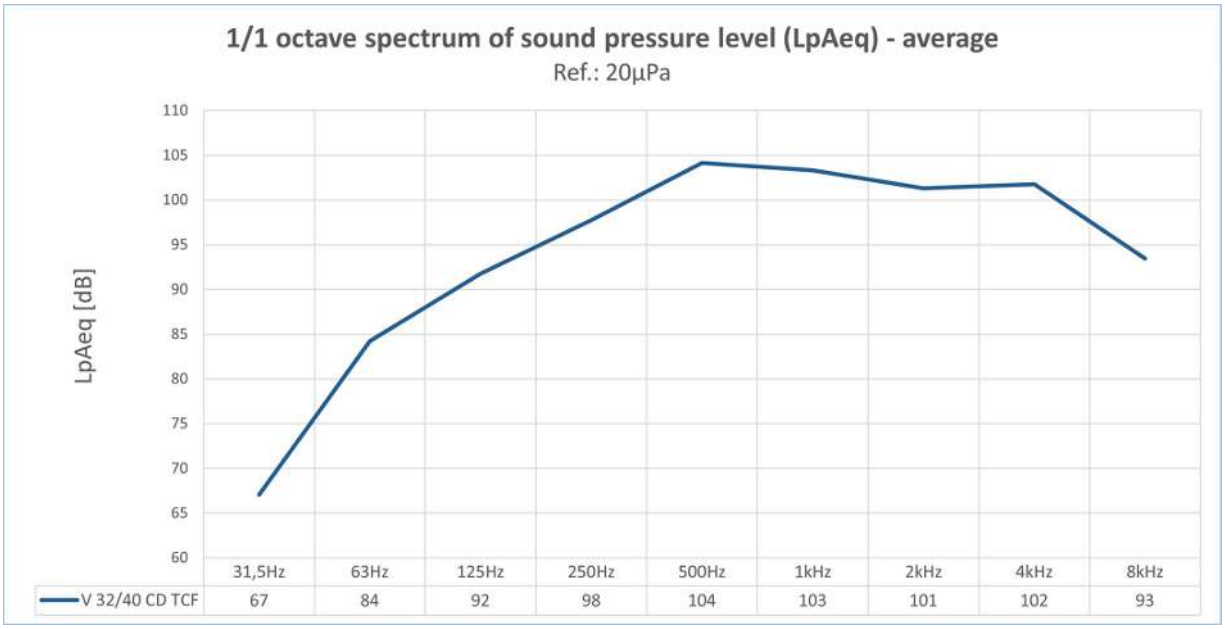

Figure 55: Airborne noise – Sound pressure level Lp – Octave level diagram V engine

2.27.2 Intake noise

L engine

Sound power level Lw

Measurements

The (unsilenced) intake air noise is determined based on measurements at the turbocharger test bed and on measurements in the intake duct of typical engines at the test bed.

Octave level diagram

The expected sound power level Lw of the unsilenced intake noise in the intake duct is below 135 dB at 100 % MCR.

The octave level diagram below represents an envelope of averaged measured spectra for comparable engines and is a conservative spectrum consequently. The data will change depending on the acoustical properties of the environment.

2025-06-16 - 1.0

Charge air blow-off noise

Charge air blow-off noise is not considered in the measurements, see below.

These data are required and valid only for ducted air intake systems. The data are not valid if the standard air filter silencer is attached to the turbocharger.

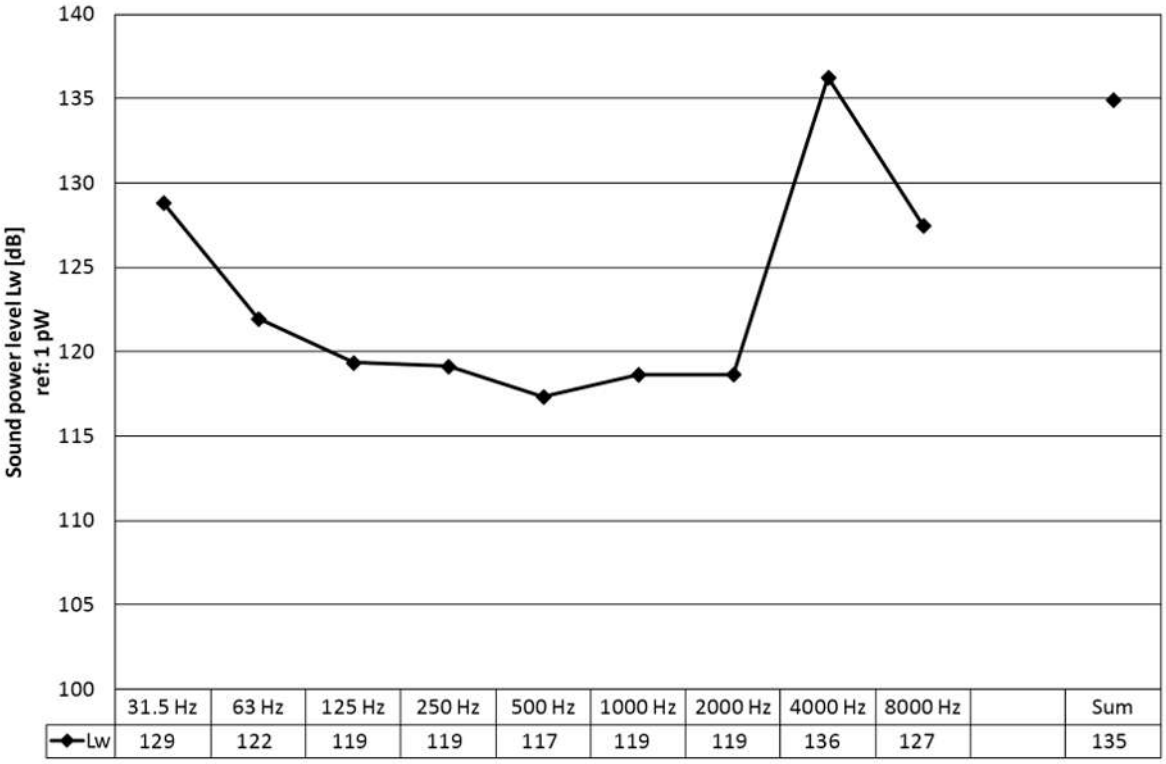

Figure 56: Unsilenced intake noise – Sound power level Lw – Octave level diagram L engine

V engine

Sound power level Lw

Measurements

The (unsilenced) intake air noise is determined based on measurements at the turbocharger test bed and on measurements in the intake duct of typical engines at the test bed.

Octave level diagram

The expected sound power level Lw of the unsilenced intake noise in the intake duct is below 136 dB at 100% MCR.

The octave level diagram below represents an envelope of averaged measured spectra for comparable engines and is a conservative spectrum consequently. The data will change depending on the acoustical properties of the environment.

Charge air blow-off noise

Charge air blow-off noise is not considered in the measurements, see below.

These data are required and valid only for ducted air intake systems. The data are not valid if the standard air filter silencer is attached to the turbocharger.

2025-06-16 - 1.0

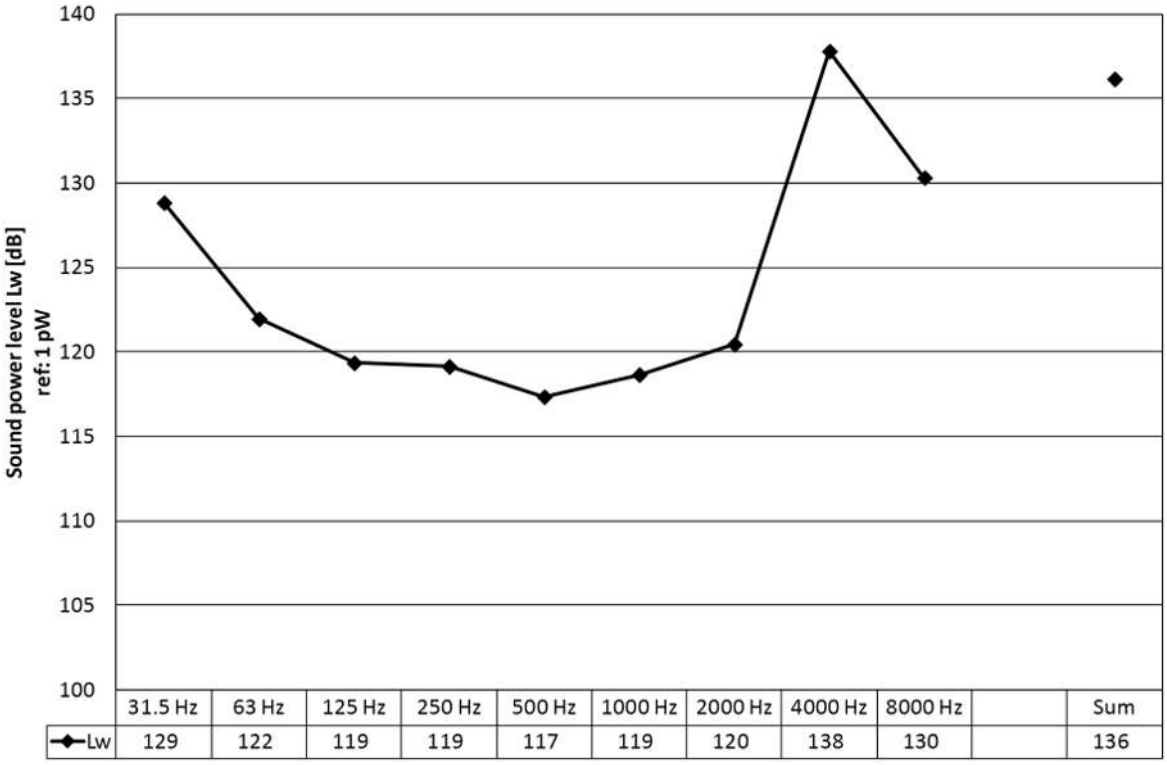

Figure 57: Unsilenced intake noise – Sound power level Lw – Octave level diagram V engine

2.27.3 Exhaust gas noise

L engine

Sound power level Lw at 100% MCR

Measurements

The (unsilenced) exhaust gas noise is measured according to internal MAN Energy Solutions guidelines at several positions in the exhaust duct.

Octave level diagram

The sound power level Lw of the unsilenced exhaust gas noise in the exhaust pipe is shown at 100% MCR.

The octave level diagram below represents an envelope of averaged measured spectra for comparable engines and is a conservative spectrum consequently. The data will change depending on the acoustical properties of the environment.

Acoustic design

To ensure an appropriate acoustic design of the exhaust gas system, the yard, MAN Energy Solutions, supplier of silencer and where necessary acoustic consultant have to cooperate.

Blow-off noise

Blow-off noise is not considered in the measurements, see below.

2025-06-16 - 1.0

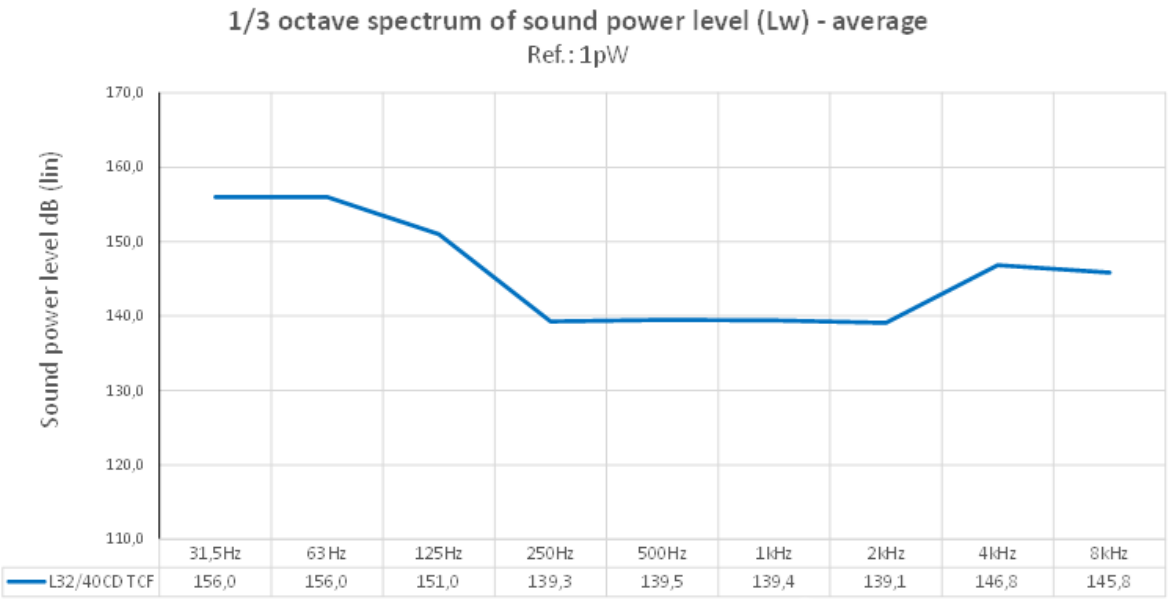

Figure 58: Unsilenced exhaust gas noise – Sound power level Lw – Octave level diagram L engine

V engine

Sound power level Lw at 100% MCR

Measurements

The (unsilenced) exhaust gas noise is measured according to internal MAN Energy Solutions guidelines at several positions in the exhaust duct.

Octave level diagram

The sound power level Lw of the unsilenced exhaust gas noise in the exhaust pipe is shown at 100% MCR.

The octave level diagram below represents an envelope of averaged measured spectra for comparable engines and is a conservative spectrum consequently. The data will change depending on the acoustical properties of the environment.

Acoustic design

To ensure an appropriate acoustic design of the exhaust gas system, the yard, MAN Energy Solutions, supplier of silencer and where necessary acoustic consultant have to cooperate.

Blow-off noise

Blow-off noise is not considered in the measurements, see below.

2025-06-16 - 1.0

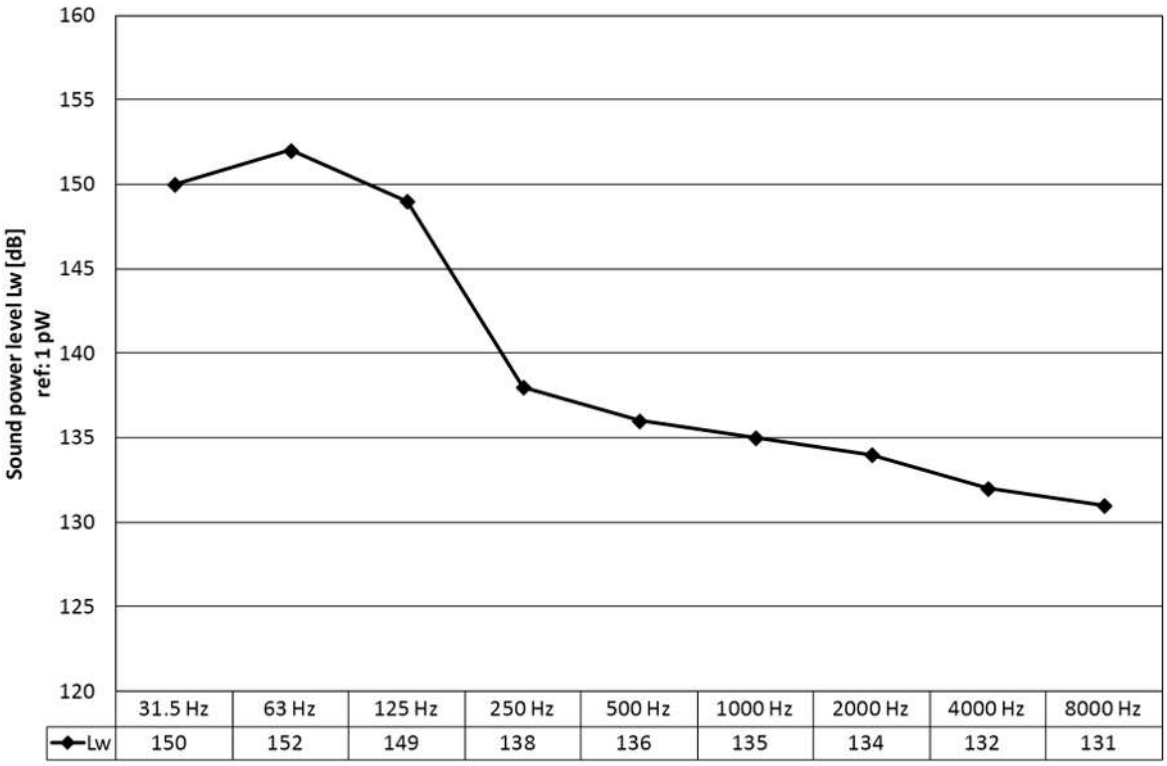

Figure 59: Unsilenced exhaust gas noise – Sound power level Lw – Octave level diagram V engine

2.27.4 Blow-off noise example

Sound power level Lw

Measurements

The (unsilenced) charge air blow-off noise is measured according to DIN 45635, part 47 at the orifice of a duct.

Throttle body with bore size 135 mm

Expansion of charge air from 3.4 bar to ambient pressure at 42°C

Octave level diagram

2025-06-16 - 1.0

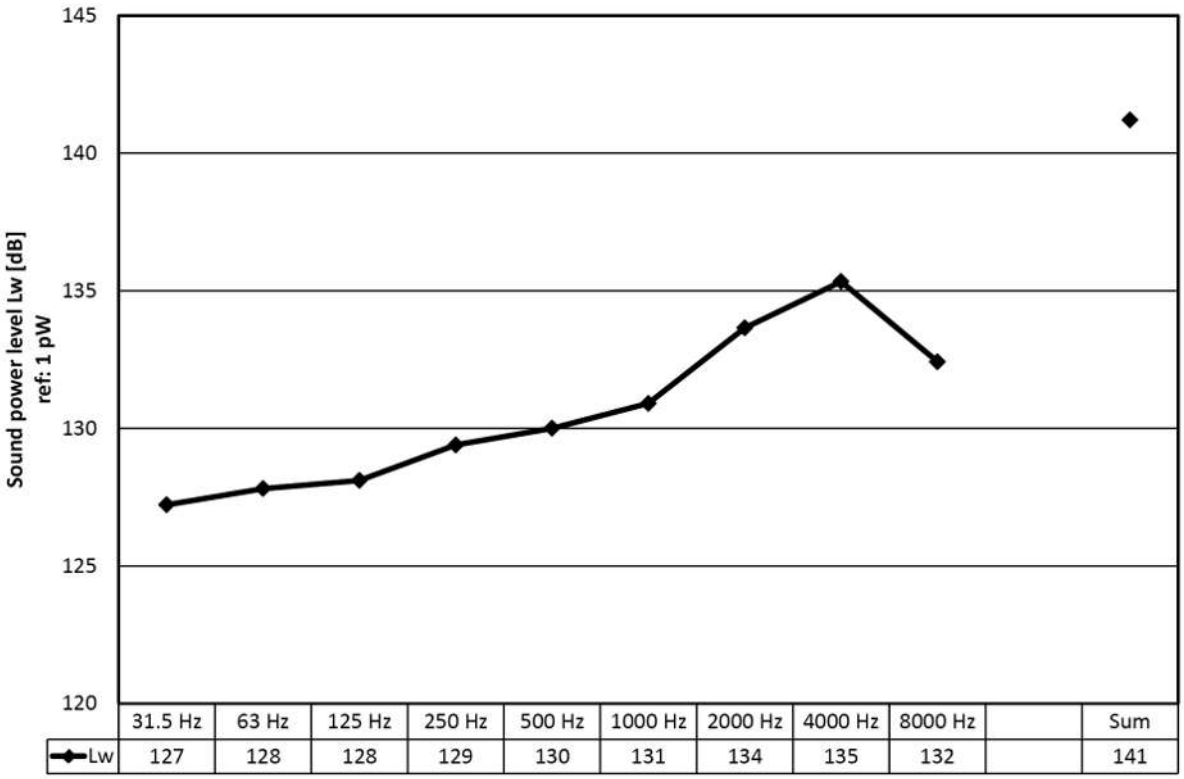

Figure 60: Unsilenced charge air blow-off noise – Sound power level Lw – Octave level diagram

2.27.5 Noise and vibration – Impact on foundation

Noise and vibration is emitted by the engine to the surrounding (see figure Noise and vibration – Impact on foundation, Page 174). The engine impact transferred through the engine mounting to the foundation is focused subsequently.

2025-06-16 - 1.0

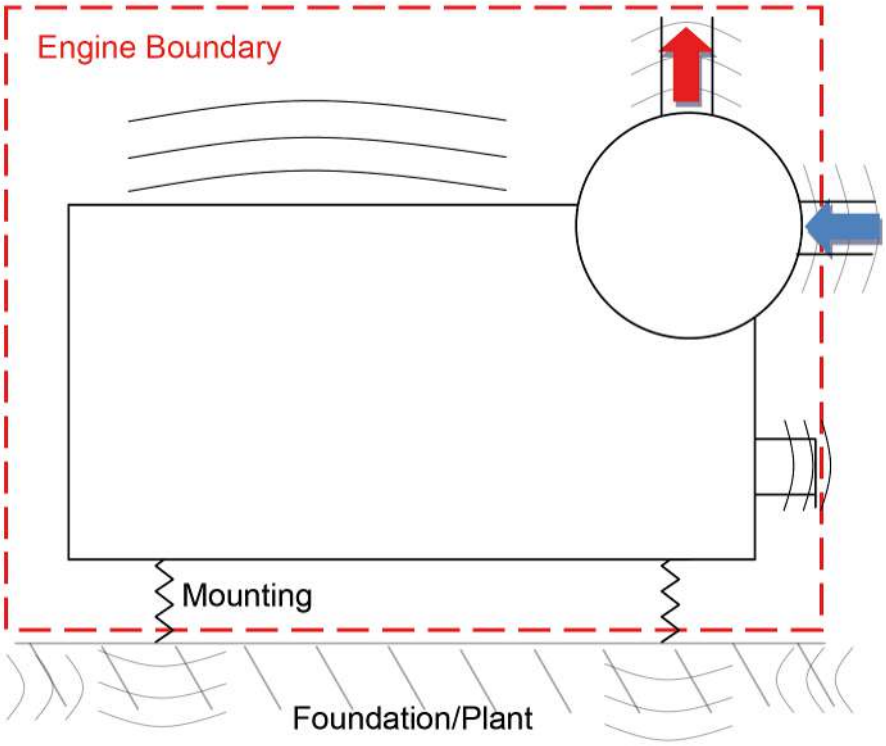

Figure 61: Noise and vibration – Impact on foundation

The foundation is excited to vibrations in a wide frequency range by the engine and by auxiliary equipment (from engine or plant). The engine is vibrating as a rigid body. Additionally, elastic engine vibrations are superimposed. Elastic vibrations are either of global (e.g. complete engine bending) or local (e.g. bending engine foot) character. If the higher frequency range is involved, the term "structure borne noise" is used instead of "vibrations".

Mechanical engine vibrations are mainly caused by mass forces of moved drive train components and by gas forces of the combustion process. For structure borne noise, further excitations are relevant as well, e.g. impacts from piston stroke and valve seating, impulsive gas force components, alternating gear train meshing forces and excitations from pumps.

For the analysis of the engine noise- and vibration-impact on the surrounding, the complete system with engine, engine mounting, foundation and plant has to be considered.

Engine related noise and vibration reduction measures cover e.g. counterbalance weights, balancing, crankshaft design with firing sequence, component design etc. The remaining, inevitable engine excitation is transmitted to the surrounding of the engine – but not completely in case of a resilient engine mounting, which is chosen according to the application-specific requirements. The resilient mounting isolates engine noise and vibration from its surrounding to a large extend. Hence, the transmitted forces are considerably reduced compared with a rigid mounting. Nevertheless, the engine itself is vibrating stronger in the low frequency range in general – especially when driving through mounting resonances.

In order to avoid resonances, it must be ensured that eigenfrequencies of foundation and coupled plant structures have a sufficient safety margin in relation to the engine excitations. Moreover, the foundation has to be designed as stiff as possible in all directions at the connections to the engine. Thus, the

2025-06-16 - 1.0

foundation mobility (measured according to ISO 7262) has to be as low as possible to ensure low structure borne noise levels. For low frequencies, the global connection of the foundation with the plant is focused for that matter. The dynamic vibration behaviour of the foundation is mostly essential for the mid frequency range. In the high frequency range, the foundation elasticity is mainly influenced by the local design at the engine mounts. E.g. for steel foundations, sufficient wall thicknesses and stiffening ribs at the connection positions shall be provided. The dimensioning of the engine foundation also has to be adjusted to other parts of the plant. For instance, it has to be avoided that engine vibrations are amplified by alternator foundation vibrations. Due to the scope of supply, the foundation design and its connection with the plant is mostly within the responsibility of the costumer. Therefore, the customer is responsible to involve MAN Energy Solutions for consultancy in case of system-related questions with interaction of engine, foundation and plant. The following information is available for MAN Energy Solutions customers, some on special request:

- Residual external forces and couples (Project Guide)

  Resulting from the summation of all mass forces from the moving drive train components. All engine components are considered rigidly in the calculation. The residual external forces and couples are only transferred completely to the foundation in case of a rigid mounting, see above.
- Static torque fluctuation (Project Guide)

  Static torque fluctuations result from the summation of gas and mass forces acting on the crank drive. All components are considered rigidly in the calculation. These couples are acting on the foundation dependent on the applied engine mounting, see above.
- Mounting forces (project-specific)

  The mounting dimensioning calculation is specific to a project and defines details of the engine mounting. Mounting forces acting on the foundation are part of the calculation results. Gas and mass forces are considered for the excitation. The engine is considered as one rigid body with elastic mounts. Thus, elastic engine vibrations are not implemented.
- Reference measurements for engine crankcase vibrations according to ISO 10816-6 (project-specific)
- Reference test bed measurements for structure borne noise (project-specific)

  Measuring points are positioned according to ISO 13332 on the engine feet above and below the mounting elements. Structure borne noise levels above elastic mounts mainly depend on the engine itself. Whereas structure borne noise levels below elastic mounts strongly depend on the foundation design. A direct transfer of the results from the test bed foundation to the plant foundation is not easily possible – even with the consideration of test bed mobilities. The results of test bed foundation mobility measurements according to ISO 7626 are available as a reference on request as well.
- Dynamic transfer stiffness properties of resilient mounts (supplier information, project-specific)

Beside the described interaction of engine, foundation and plant with transfer through the engine mounting to the foundation, additional transfer paths need to be considered. For instance with focus on the elastic coupling of the drive train, the exhaust pipe, other pipes and supports etc. Besides the engine, other sources of noise and vibration need to be considered as well (e.g. auxiliary equipment, propeller, thruster).

2025-06-16 - 1.0

2.28 Vibration

2.28.1 Torsional vibrations

Data required for torsional vibration calculation

MAN Energy Solutions calculates the torsional vibrations behaviour for each individual engine plant of their supply to determine the location and severity of resonance points. If necessary, appropriate measures will be taken to avoid excessive stresses due to torsional vibration. These investigations cover the ideal normal operation of the engine (all cylinders are firing equally) as well as the simulated emergency operation (misfiring of the cylinder exerting the greatest influence on vibrations, acting against compression). Besides the natural frequencies and the modes also the dynamic response will be calculated, normally under consideration of the 1st to 24th harmonic of the gas and mass forces of the engine.

Beyond that also further exciting sources such as propeller, pumps etc. can be considered if the respective manufacturer is able to make the corresponding data available to MAN Energy Solutions.

If necessary, a torsional vibration calculation will be worked out which can be submitted for approval to a classification society or a legal authority.

To carry out the torsional vibration calculation following particulars and/or documents are required.

General

- Type of propulsion (GenSet, mechanical or electric propulsion)
- Arrangement of the whole system including all engine-driven equipment
- Definition of the operating modes
- Maximum power consumption of the individual working machines

Engine

- Rated output, rated speed
- Kind of engine load (fixed pitch propeller, controllable pitch propeller, combinator curve, operation with reduced speed at excessive load)
- Kind of mounting of the engine (can influence the determination of the flexible coupling)
- Operational speed range

Flexible coupling

- Make, size and type
- Rated torque (Nm)
- Possible application factor
- Maximum speed (rpm)
- Permissible maximum torque for passing through resonance (Nm)
- Permissible shock torque for short-term loads (Nm)
- Permanently permissible alternating torque (Nm) including influencing factors (frequency, temperature, mean torque)

2025-06-16 - 1.0

- Permanently permissible power loss (W) including influencing factors (frequency, temperature)
- Dynamic torsional stiffness (Nm/rad) including influencing factors (load, frequency, temperature), if applicable
- Relative damping (ψ) including influencing factors (load, frequency, temperature), if applicable
- Moment of inertia (kgm^2) for all parts of the coupling
- Dynamic stiffness in radial, axial and angular direction
- Permissible relative motions in radial, axial and angular direction, permanent and maximum
- Maximum permissible torque which can be transferred through a get-you-home-device/torque limiter if foreseen

Clutch coupling

- Make, size and type
- Rated torque (Nm)
- Permissible maximum torque (Nm)
- Permanently permissible alternating torque (Nm) including influencing factors (frequency, temperature, mean torque)
- Dynamic torsional stiffness (Nm/rad)
- Damping factor
- Moments of inertia for the operation conditions, clutched and declutched
- Course of torque versus time during clutching in
- Permissible slip time (s)
- Slip torque (Nm)
- Maximum permissible engagement speed (rpm)

Gearbox

- Make and type
- Torsional multi mass system including the moments of inertia and the torsional stiffness, preferably related to the individual speed; in case of related figures, specification of the relation speed is required
- Gear ratios (number of teeth, speeds)
- Possible operating conditions (different gear ratios, clutch couplings)
- Permissible alternating torques in the gear meshes

Shaft line

- Drawing including all information about length and diameter of the shaft sections as well as the material
- Alternatively torsional stiffness (Nm/rad)

Propeller

- Kind of propeller (fixed pitch or controllable pitch propeller)
- Moment of inertia in air (kgm^2)
- Moment of inertia in water (kgm^2); for controllable pitch propellers also in dependence on pitch; for twin-engine plants separately for single- and twin-engine operation
- Relation between load and pitch

2025-06-16 - 1.0

- Number of blades
- Diameter (mm)
- Possible torsional excitation in % of the rated torque for the 1st and the 2nd blade-pass frequency

Pump

- Kind of pump (e.g. dredging pump)
- Drawing of the pump shaft with all lengths and diameters
- Alternatively, torsional stiffness (Nm/rad)
- Moment of inertia in air (kgm^2)
- Moment of inertia in operation (kgm^2) under consideration of the conveyed medium
- Number of blades
- Possible torsional excitation in % of the rated torque for the 1st and the 2nd blade-pass frequency
- Power consumption curve

Alternator for electric propulsion plants

- Drawing of the alternator shaft with all lengths and diameters
- Alternatively, torsional stiffness (Nm/rad)
- Moment of inertia of the parts mounted to the shaft (kgm^2)
- Electrical output (kVA) including power factor cos φ and efficiency
- Or mechanical output (kW)
- Complex synchronizing coefficients for no-load and full load in dependence on frequency, reference torque
- Island or parallel mode
- Load profile (e.g. load steps)
- Frequency fluctuation of the net

Alternator for mechanical propulsion plants (e.g. PTO/PTH)

- Drawing of the alternator shaft with all lengths and diameters
- Torsional stiffness, if available
- Moment of inertia of the parts mounted to the shaft (kgm^2)
- Electrical output (kVA) including power factor cos φ and efficiency
- Or mechanical output (kW)
- Complex synchronizing coefficients for no-load and full load in dependence on frequency, reference torque

Secondary power take-off

- Kind of working machine
- Kind of drive
- Operational mode, operation speed range
- Power consumption
- Drawing of the shafts with all lengths and diameters
- Alternatively, torsional stiffness (Nm/rad)
- Moments of inertia (kgm^2)

2025-06-16 - 1.0

- Possible torsional excitation in size and frequency in dependence on load and speed

2.29 Requirements for power drive connection (static)

Evaluation of permissible theoretical bearing loads

Limit values of masses to be coupled after the engine

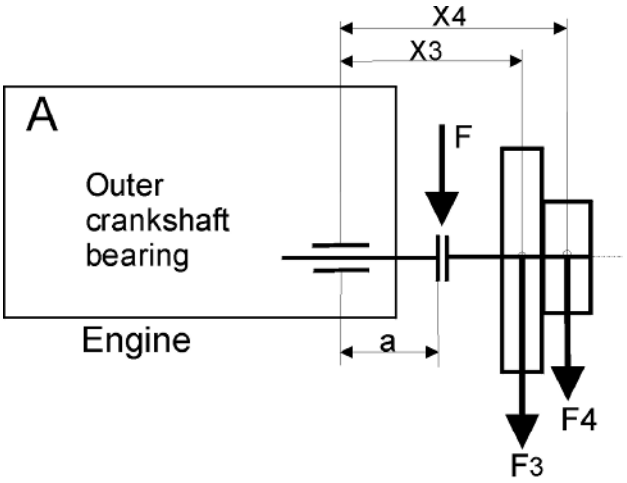

Figure 62: Case A: Overhung arrangement

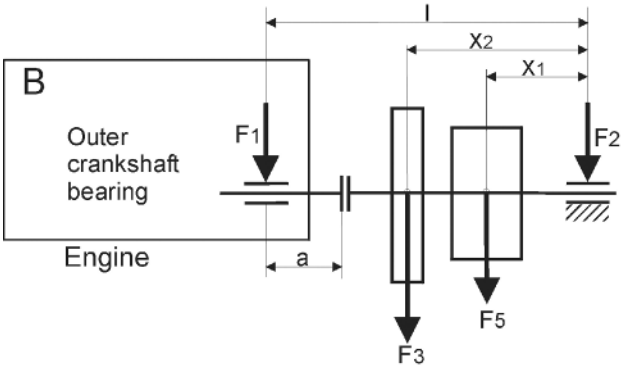

Figure 63: Case B: Rigid coupling

$M_{max} = F * a = F_3 * x_3 + F_4 * x_4$ $F_1 = (F_3 * x_2 + F_5 * x_1)/l$

F_1	Theoretical bearing force at the external engine bearing
F_2	Theoretical bearing force at the alternator bearing
F_3	Flywheel weight
F_4	Coupling weight acting on the engine, including reset forces
F_5	Rotor weight of the alternator
a	Distance between end of coupling flange and centre of outer crankshaft bearing
l	Distance between centre of outer crankshaft bearing and alternator bearing

2025-06-16 - 1.0

Engine	Distance a	Case A	Case B
		$M_{max} = F * a$	$F_{1\ max}$
	mm	kNm	kN
L engine	335	13.5 [1]	55
V engine	335	25.0 [1]	100
[1] Inclusive of couples resulting from restoring forces of the coupling.			

Table 125: Example calculation case A and B

Distance between engine seating surface and crankshaft centre line:

- L engine: 530 mm
- V engine: 580 mm

Note:
Stated values only for orientation – need to be clarified project specific and may be limited due to the torsional vibration calculation or special service conditions.

Note:
Masses which are connected downstream of the engine in the case of an overhung or rigidly coupled, arrangement result in additional crankshaft bending stress, which is mirrored in a measured web deflection during engine installation.

Provided the limit values for the masses to be coupled downstream of the engine (permissible values for M_{max} and $F_{1\ max}$) are complied with, the permitted web deflections will not be exceeded during assembly.

Observing these values ensures a sufficiently long operating time before a re-alignment of the crankshaft has to be carried out.

2025-06-16 - 1.0

2.30 Requirements for power drive connection (dynamic)

2.30.1 Moments of inertia – Crankshaft, damper, flywheel

Propeller operation (CPP)

Marine main engines						
Engine					Required minimum total moment of inertia[1] $J_{Total\ min}$	Plant
No. of cylinders, config.	Maximum continuous rating	Moment of inertia crank-shaft + damper J_1	Moment of inertia flywheel J_2	Mass of flywheel		Required minimum additional moment of inertia after flywheel[2]
	[kW]	[kgm²]	[kgm²]	[kg]	[kgm²]	[kgm²]
n = 750 rpm						
6L	3,000	512	611	1,729	608	-
7L	3,500	587			709	
8L	4,000	635			811	
9L	4,500	654			912	
12V	6,000	861	611	1,729	1,216	-
14V	7,000	950			1,419	
16V	8,000	1,037			1,621	
18V	9,000	1,126			1,824	87

[1] Required minimum moment of inertia of engine, flywheel and arrangement after flywheel in total.

[2] Required additional moment of inertia after flywheel to achieve the required minimum total moment of inertia.

Table 126: Moments of inertia for marine main engine – Crankshaft, damper, flywheel

For flywheels dimensions see section Power transmission, Page 187.

2025-06-16 - 1.0

Constant speed

Marine main engine							
Engine						Required minimum total moment of inertia[1]	Plant
No. of cylinders, config.	Maximum continuous rating	Moment of inertia crankshaft + damper	Moment of inertia flywheel	Mass of flywheel	Cyclic irregularity		Required minimum additional moment of inertia after flywheel[2]
	[kW]	[kgm²]	[kgm²]	[kg]		[kgm²]	[kgm²]
n = 720 rpm							
6L	3,000	512	897	2,515	404	1,475	66
7L	3,500	587			299	1,720	236
8L	4,000	635			441	1,966	434
9L	4,500	654			596	2,212	661
12V	6,000	861	1,071	2,950	958	2,949	1,017
14V	7,000	950			1,294	3,440	1,419
16V	8,000	1,037			6,211	3,932	1,824
18V	9,000	1,126			2,794	4,423	2,226
n = 750 rpm							
6L	3,000	512	897	2,515	468	1,359	-
7L	3,500	587			308	1,586	102
8L	4,000	635			456	1,812	280
9L	4,500	654			607	2,038	487
12V	6,000	861	1,071	2,950	1,073	2,718	786
14V	7,000	950			1,315	3,171	1,150
16V	8,000	1,037			5,763	3,624	1,516
18V	9,000	1,126			2,822	4,076	1,879

[1] Required minimum moment of inertia of engine, flywheel and arrangement after flywheel in total.

[2] Required additional moment of inertia after flywheel to achieve the required minimum total moment of inertia.

Table 127: Moments of inertia for electric propulsion plants – Crankshaft, damper, flywheel

For flywheels dimensions see section Power transmission, Page 187.

2.30.2 Balancing of masses – Firing order

Certain cylinder numbers have unbalanced forces and couples due to crank diagram. These forces and couples cause dynamic effects on the foundation. Due to a balancing of masses the forces and couples are reduced. In the following tables the remaining forces and couples are displayed.

L engine

Rotating crank balance: 100 %

2025-06-16 - 1.0

No. of cylinders, config.	Firing order	Residual external couples					
		M_{rot} (kNm)		$M_{osc\ 1st\ order}$ (kNm)		$M_{osc\ 2nd\ order}$ (kNm)	
Engine speed (rpm)		750	720	750	720	750	720
6L	A	0	0	0	0	0	0
7L	A	0.09	0.08	30.7	28.3	23.6	21.7
8L	B	0	0	0	0	0	0
9L	B	0.04		14.5	13.4	36.9	34.0

Table 128: Residual external couples

For engines of type L engine the external mass forces are equal to zero.

Firing order: Counted from coupling side

No. of cylinders	Firing order	Clockwise rotation	Counter clockwise rotation
6	A	1-3-5-6-4-2	1-2-4-6-5-3
7	A	1-2-4-6-7-5-3	1-3-5-7-6-4-2
8	B	1-4-7-6-8-5-2-3	1-3-2-5-8-6-7-4
9	B	1-6-3-2-8-7-4-9-5	1-5-9-4-7-8-2-3-6

Table 129: Firing order L engine

V engine

Rotating crank balance: 100 %

No. of cylinders, config.	Firing order	Residual external couples									
		M_{rot} (kNm)		$M_{osc\ 1st\ order}$ (kNm)				$M_{osc\ 2nd\ order}$ (kNm)			
Engine speed (rpm)		750	720	750		720		750		720	
Direction				vertical	horizontal	vertical	horizontal	vertical	horizontal	vertical	horizontal
12V	A	0	0	0	0	0	0	0	0	0	0
14V	A	0.21	0.19	62.3	10.7	57.4	9.9	36.6	15.2	33.7	14.0
16V	B	0	0	0	0	0	0	0	0	0	0
18V	A	0.15	0.14	45.1	7.7	41.6	7.1	19.9	8.3	18.3	7.6

Table 130: Residual external couples

For engines of type V engine the external mass forces are equal to zero.

Firing order: Counted from coupling side

No. of cylinders	Firing order	Clockwise rotation	Counter clockwise rotation
12	A	A1-B1-A3-B3-A5-B5-A6-B6-A4-B4-A2-B2	A1-B2-A2-B4-A4-B6-A6-B5-A5-B3-A3-B1
14	A	A1-B1-A2-B2-A4-B4-A6-B6-A7-B7-A5-B5-A3-B3	A1-B3-A3-B5-A5-B7-A7-B6-A6-B4-A4-B2-A2-B1
16	B	A1-B1-A4-B4-A7-B7-A6-B6-A8-B8-A5-B5-A2-B2-A3-B3	A1-B3-A3-B2-A2-B5-A5-B8-A8-B6-A6-B7-A7-B4-A4-B1

2025-06-16 - 1.0

No. of cylinders	Firing order	Clockwise rotation	Counter clockwise rotation
18	A	A1-B1-A3-B3-A5-B5-A7-B7-A9-B9-A8-B8-A6-B6-A4-B4-A2-B2	A1-B2-A2-B4-A4-B6-A6-B8-A8-B9-A9-B7-A7-B5-A5-B3-A3-B1

Table 131: Firing order V engine

2.30.3 Static torque fluctuation

General

The static torque fluctuation is the summation of the torques acting at all cranks around the crankshaft axis taking into account the correct phase-angles. These torques are created by the gas and mass forces acting at the crankpins, with the crank radius being used as the lever. An rigid crankshaft is assumed.

The values T_{max} and T_{min} listed in the following table(s) represent a measure for the reaction forces of the engine. The reaction forces generated by the torque fluctuation are dependent on speed and cylinder number and give a contribution to the excitations transmitted into the foundation see figure Static torque fluctuation, Page 184 and the table(s) in this section. According to different mountings these forces are reduced.

In order to avoid local vibration excitations in the vessel, it must be ensured that the natural frequencies of important part structures (e.g. panels, bulkheads, tank walls and decks, equipment and its foundation, pipe systems) have a sufficient safety margin (if possible ±30%) in relation to all engine excitation frequencies.

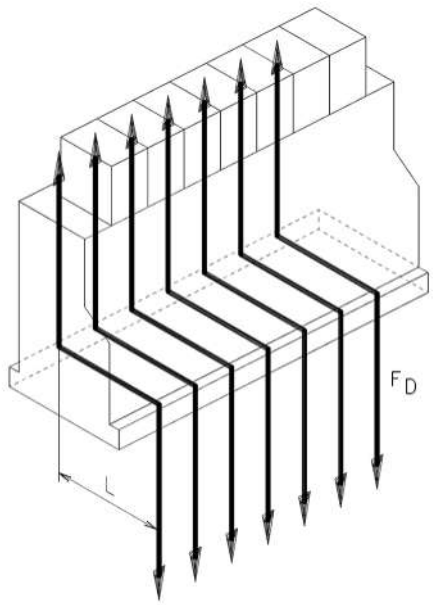

Figure 64: Static torque fluctuation

$$F_D \times L \times z = \frac{T_{max} - T_{min}}{2}$$

L Distance between foundation bolts

z Number of cylinders

2025-06-16 - 1.0

Static torque fluctuation and exciting frequencies

L engine (GenSet, CPP) – Example to declare abbreviations

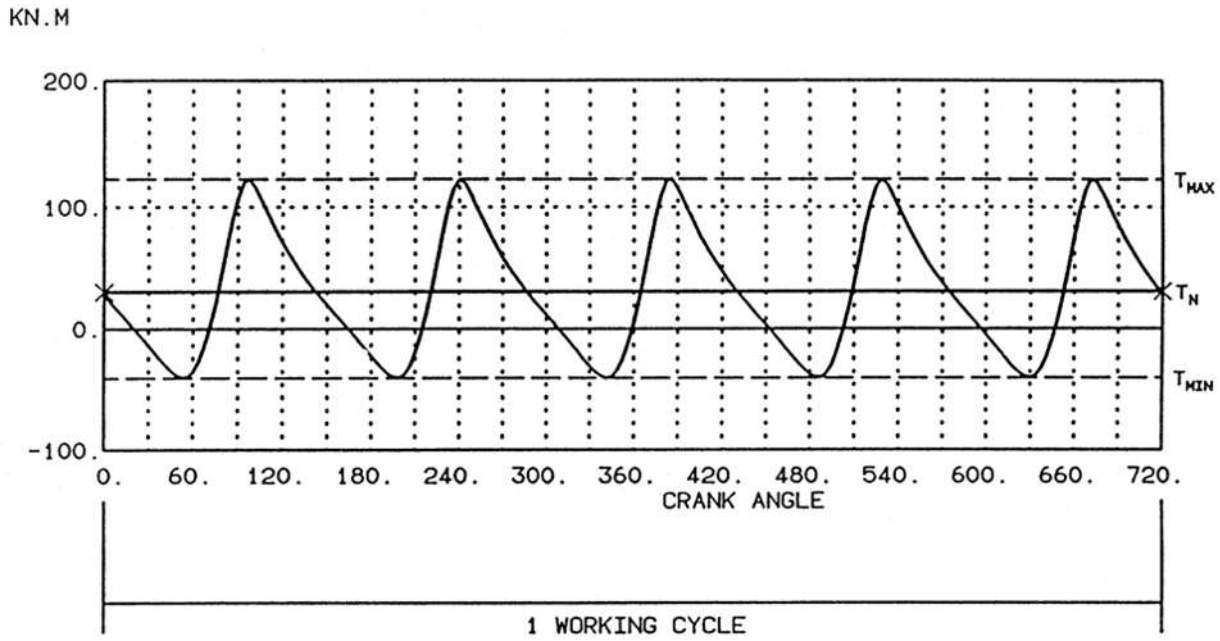

Figure 65: Example to declare abbreviations – L engine

No. of cylinders, config.	Output	Speed	T_n	T_{max}	T_{min}	Main exciting components		
						Order	Frequency[1)]	±T
	kW	rpm	kNm	kNm	kNm	rpm	Hz	kNm
6L	3,000	720	39.8	96.1	–9.1	3.0 6.0	36.0 72.0	42.2 18.9
7L	3,500		46.4	130.8	–24.4	3.5 7.0	42.0 84.0	75.2 12.2
8L	4,000		53.1	125.5	–9.2	4.0 8.0	48.0 96.0	65.5 6.6
9L	4,500		59.7	125.6	1.8	4.5 9.0	54.0 108.0	61.1 3.3
6L	3,000	750	38.2	89.1	–6.4	3.0 6.0	37.5 75.0	38.0 18.8
7L	3,500		44.6	126.9	–23.8	3.5 7.0	43.75 87.5	74.0 12.1
8L	4,000		50.9	121.3	–8.9	4.0 8.0	50.0 100.0	64.3 6.7
9L	4,500		57.3	121.8	1.1	4.5 9.0	56.25 112.5	60.4 3.4

[1)] Exciting frequency of the main harmonic components.

Table 132: Static torque fluctuation and exciting frequency – L engine

2025-06-16 - 1.0

V engine (GenSet, CPP) – Example to declare abbreviations

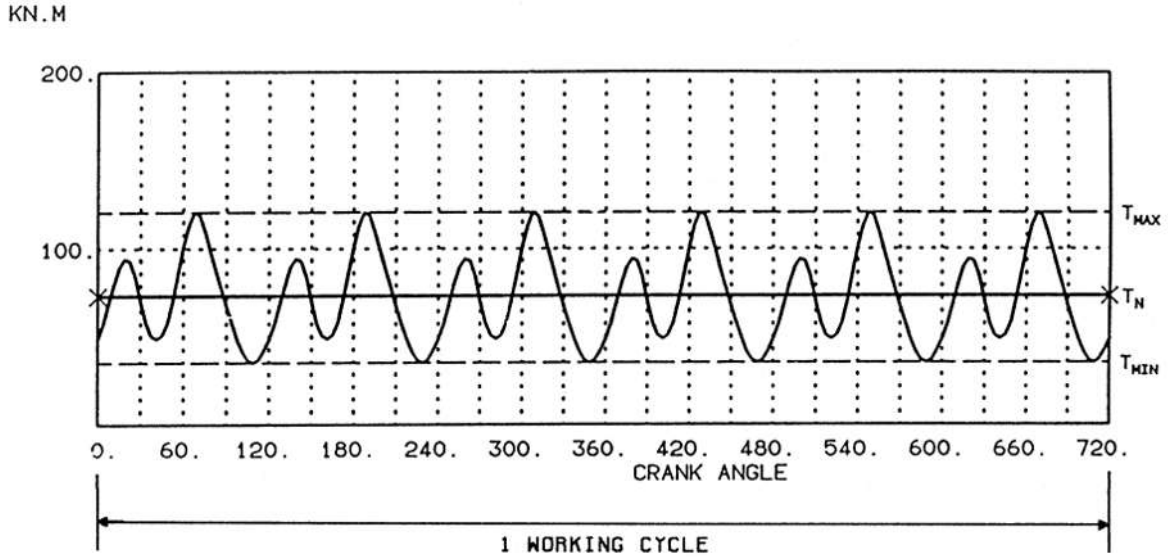

Figure 66: Example to declare abbreviation – V engine

No. of cylinders, config.	Output	Speed	T_n	T_{max}	T_{min}	Main exciting components		
						Order	Frequency[1]	±T
	kW	rpm	kNm	kNm	kNm	rpm	Hz	kNm
12V	6,000	720	79.6	133.8	31.5	3.0	36.0	32.5
						6.0	72.0	26.8
14V	7,000		92.8	135.5	45.6	3.5	42.0	29.4
						7.0	84.0	22.3
16V	8,000		106.1	122.8	87.6	4.0	48.0	0
						8.0	96.0	13.3
18V	9,000		119.4	140.1	86.7	4.5	54.0	23.8
						9.0	108.0	6.1
12V	6,000	750	76.4	127.3	32.9	3.0	37.5	29.2
						6.0	75.0	26.7
14V	7,000		89.1	132.8	42.6	3.5	43.75	29.0
						7.0	87.5	22.3
16V	8,000		101.9	120.5	82.6	4.0	50.0	0
						8.0	100.0	13.5
18V	9,000		114.6	137.4	81.7	4.5	56.25	23.6
						9.0	112.5	6.3

[1] Exciting frequency of the main harmonic components.

Table 133: Static torque fluctuation and exciting frequency – V engine

2025-06-16 - 1.0

2.31 Power transmission

2.31.1 Flywheel arrangement

Flywheel with flexible coupling

Propeller operation

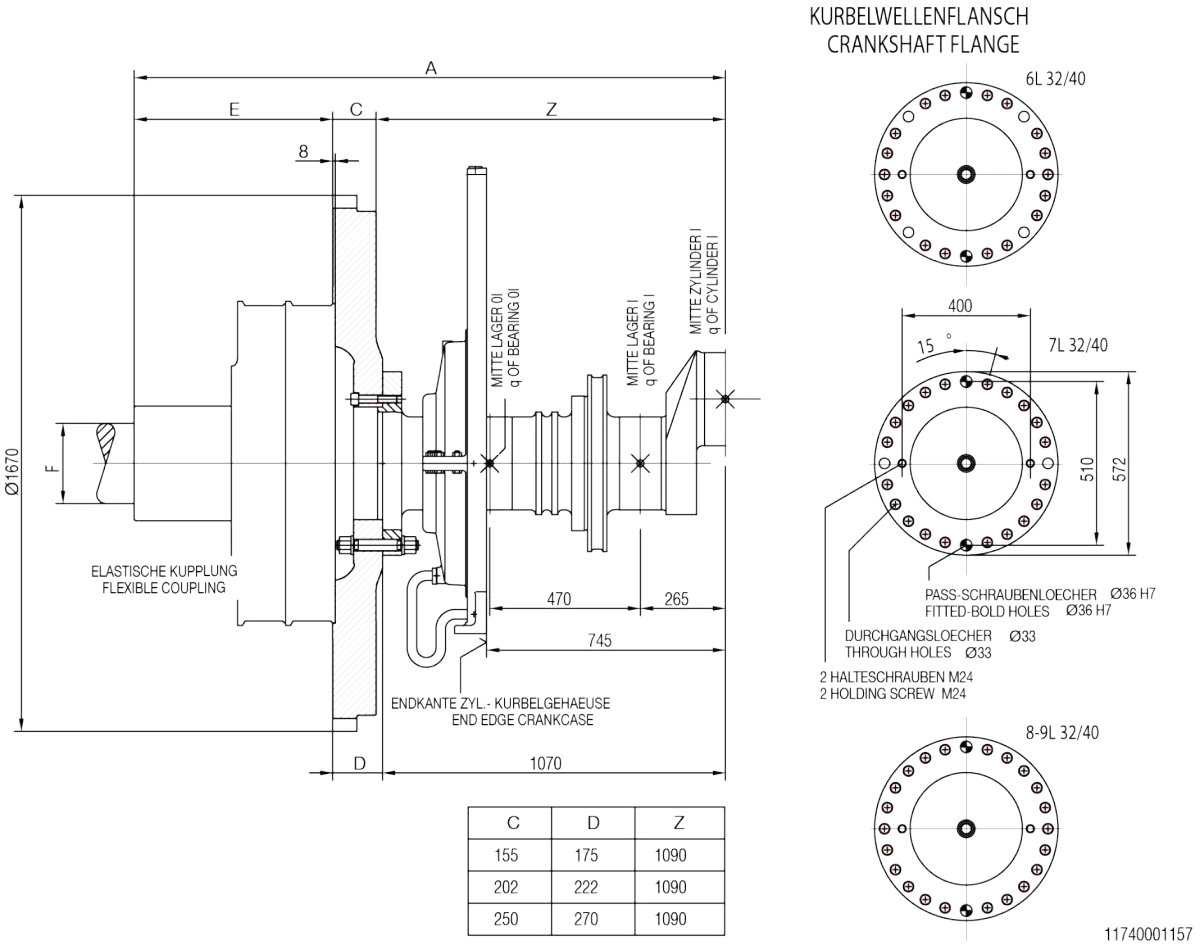

C	D	Z
155	175	1090
202	222	1090
250	270	1090

Figure 67: Flywheel with flexible coupling – L engine

No. of cylinders, config.	A[1)]	E[1)]	F_{min}	F_{max}	No. of through bolts	No. of fitted bolts
	mm					
6L	1,657	432	110	220	18	2
7L	1,692	467	115	235	20	
8L	1,692	467	115	235	22	
9L	1,712	487	125	225		

[1)] With rigid mounting.

2025-06-16 - 1.0

Note:
The flexible coupling will be part of MAN Energy Solutions supply and thus we will produce a contract specific flywheel/coupling/driven machine arrangement drawing giving all necessary installation dimensions. Final dimensions of flywheel and flexible coupling will result from clarification of technical details of drive and from the result of the torsional vibration calculation. Flywheel diameter must not be changed.

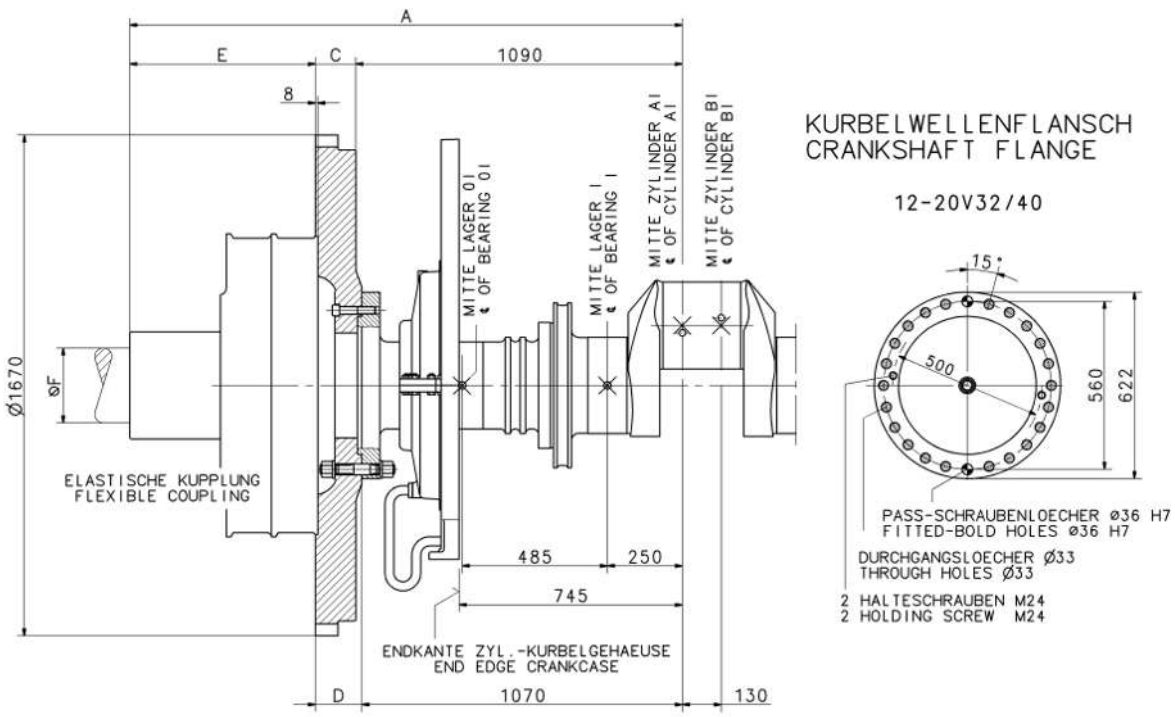

C	D	Z
155	175	1090
202	222	1090
250	270	1090

Figure 68: Flywheel with flexible coupling – V engine

No. of cylinders, config.	A[1)]	E[1)]	F_{min}	F_{max}	No. of through bolts	No. of fitted bolts
	mm					
12V	1,657	422	135	275	22	2
14V	1,717	492	145	295		
16V	1,737	512	160	320		
18V						
[1)] With rigid mounting.						

Note:
The flexible coupling will be part of MAN Energy Solutions supply and thus we will produce a contract specific flywheel/coupling/driven machine arrangement drawing giving all necessary installation dimensions. Final dimensions of fly-

2025-06-16 - 1.0

wheel and flexible coupling will result from clarification of technical details of drive and from the result of the torsional vibration calculation. Flywheel diameter must not be changed.

Flywheel arrangement with flexible coupling for two-bearing alternator

Electric propulsion plant

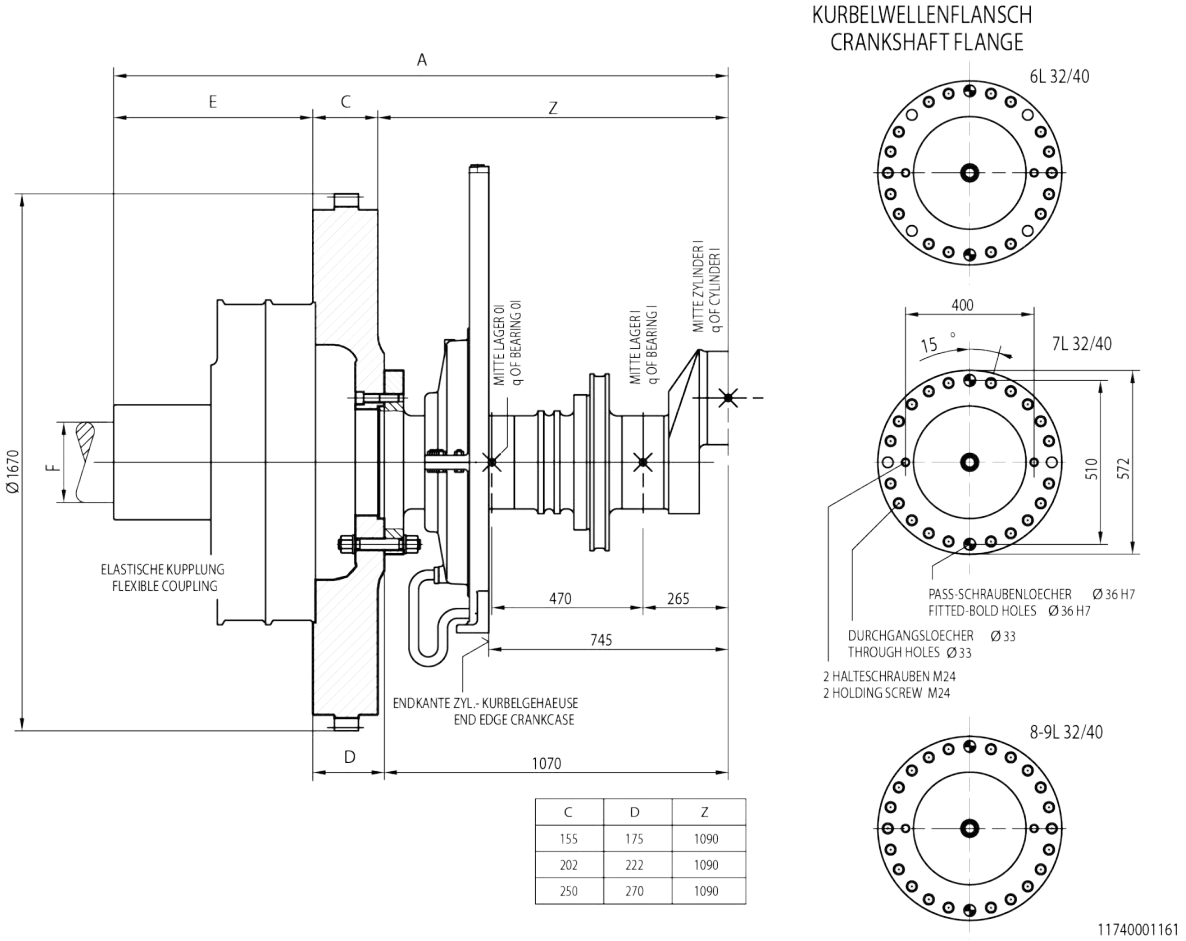

C	D	Z
155	175	1090
202	222	1090
250	270	1090

Figure 69: Flywheel with flexible coupling for two-bearing alternator – L engine

No. of cylinders, config.	A[1)]	C	D	E[1)]	F_{min}	F_{max}	No. of through bolts	No. of fitted bolts
	mm							
6L	1,657	135	155	432	110	220	18	2
7L	1,807	250	270	487	115	235	20	
8L	1,827				115	235	22	
9L					125	225	22	

[1)] With rigid mounting.

Note:
The flexible coupling will be part of MAN Energy Solutions supply and thus we will produce a contract specific flywheel/coupling/driven machine arrangement drawing giving all necessary installation dimensions. Final dimensions of fly-

wheel and flexible coupling will result from clarification of technical details of drive and from the result of the torsional vibration calculation. Flywheel diameter must not be changed.

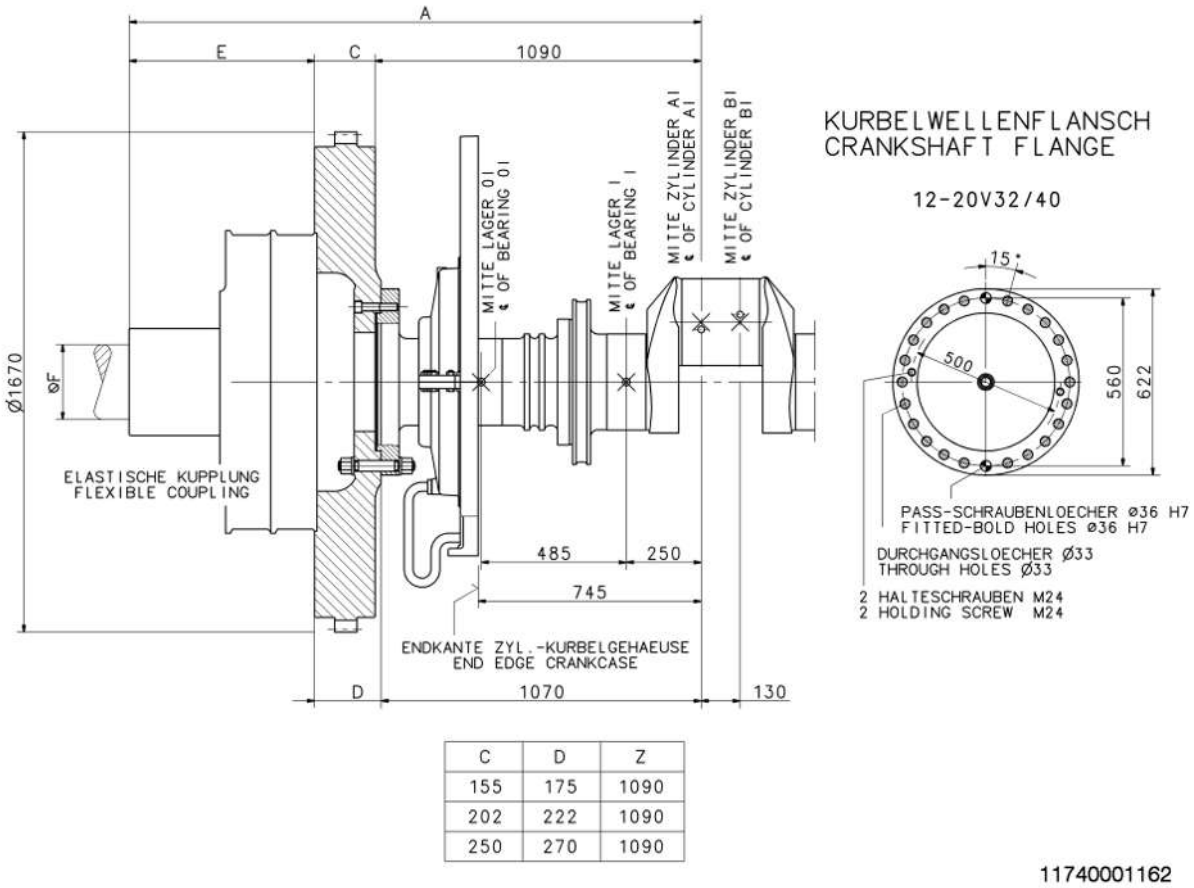

C	D	Z
155	175	1090
202	222	1090
250	270	1090

Figure 70: Flywheel with flexible coupling for two-bearing alternator – V engine

No. of cylinders, config.	A[1)]	E[1)]	F_{min}	F_{max}	No. of through bolts	No. of fitted bolts
	mm					
12V	1,762	422	135	275	22	-
14V	1,832	492	145	295		2
16V	1,852	512	160	320		
18V						
[1)] With rigid mounting.						

Note:
The flexible coupling will be part of MAN Energy Solutions supply and thus we will produce a contract specific flywheel/coupling/driven machine arrangement drawing giving all necessary installation dimensions. Final dimensions of flywheel and flexible coupling will result from clarification of technical details of drive and from the result of the torsional vibration calculation. Flywheel diameter must not be changed.

2025-06-16 - 1.0

Flywheel arrangement coupling and gearbox

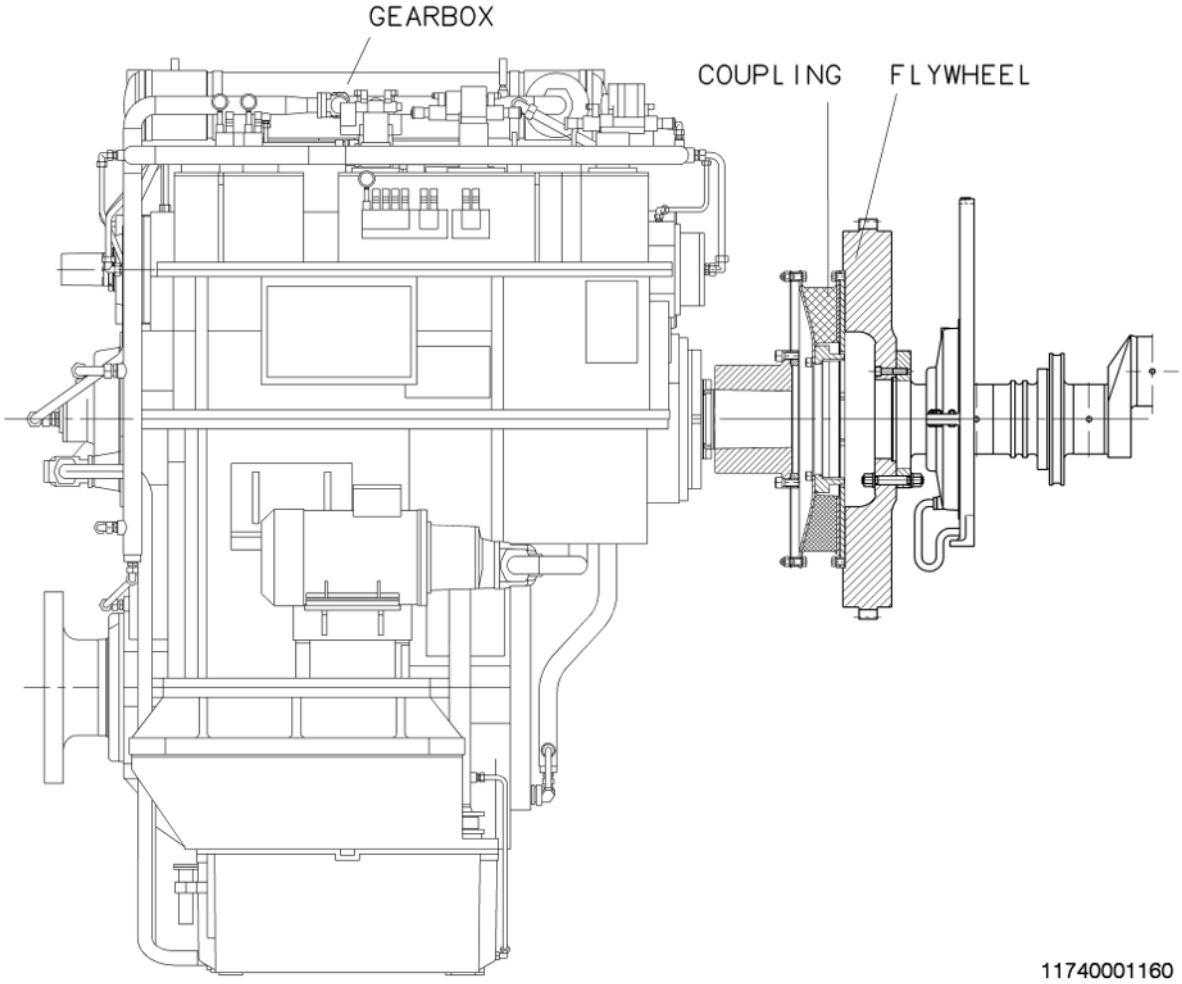

Figure 71: Example for an arrangement of flywheel, coupling and gearbox – L/V engine

2025-06-16 - 1.0

Flywheel arrangement coupling and alternator

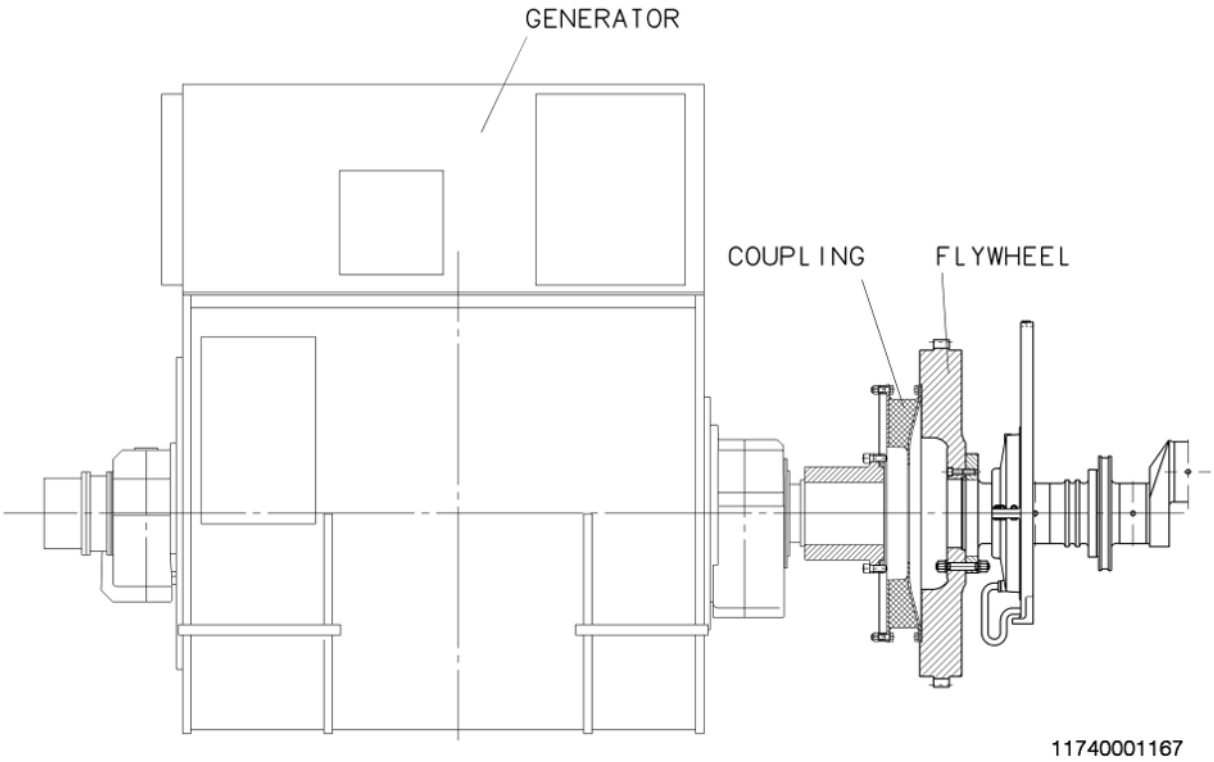

Figure 72: Example for an arrangement of flywheel, coupling and alternator – L/V engine

2025-06-16 - 1.0

2.32 Arrangement of attached pumps

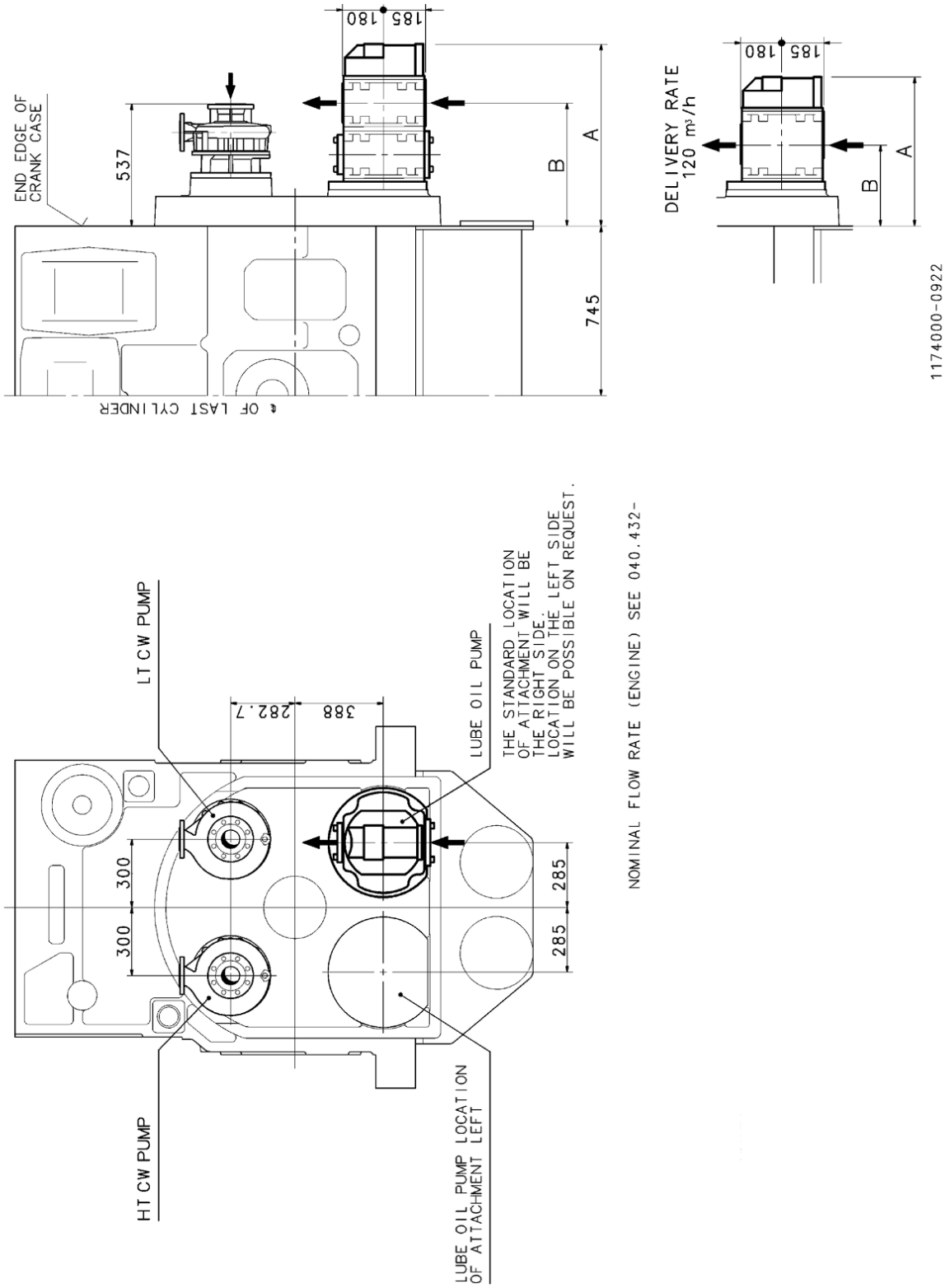

Figure 73: Attached pumps L engine

Delivery rate [m³/h]	A	B
120	655	355
141	800	541
162	882	623
191	882	623

2025-06-16 - 1.0

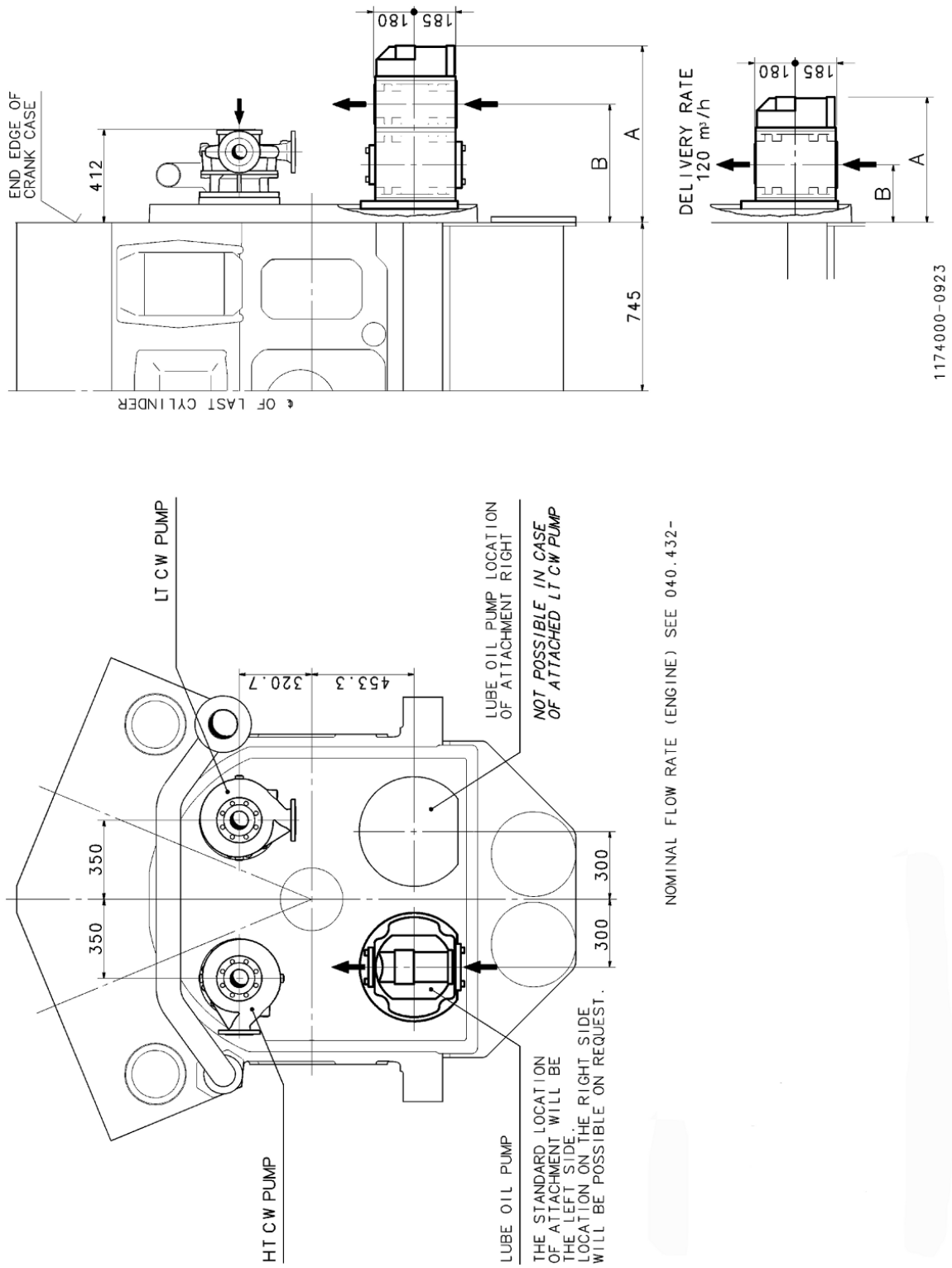

Figure 74: Attached pumps V engine

Delivery rate [m³/h]	A	B
162	782	355
191	782	523
226	864	564
2 x 120	555	255

2.33 Foundation

2.33.1 General requirements for engine foundation

Plate thicknesses

The stated material dimensions are recommendations, calculated for steel plates. Thicknesses smaller than these are not permissible. When using other materials (e.g. aluminium), a sufficient margin has to be added.

Top plates

Before or after having been welded in place, the bearing surfaces should be machined and freed from rolling scale. Surface finish corresponding to Ra 3.2 peak-to-valley roughness in the area of the chocks shall be accomplished.

The thickness given is the finished size after machining.

Downward inclination outwards, not exceeding 0.7%.

Prior to fitting the chocks, clean the bearing surfaces from dirt and rust that may have formed. After the drilling of the foundation bolt holes, spotface the lower contact face normal to the bolt hole.

Foundation girders

The distance of the inner girders must be observed. We recommend that the distance of the outer girders (only required for larger types) is observed as well.

The girders must be aligned exactly above and underneath the tank top.

Floor plates

No manholes are permitted in the floor plates in the area of the box-shaped foundation. Welding is to be carried out through the manholes in the outer girders.

Top plate supporting

Provide support in the area of the frames from the nearest girder below.

Dynamic foundation requirements

The eigenfrequencies of the foundation and the supporting structures, including GenSet weight (without engine) shall be higher than 20 Hz. Occasionally, even higher foundation eigenfrequencies are required. For further information refer to section Noise and vibration – Impact on foundation, Page 173.

2025-06-16 - 1.0

Note:
The requirements of the respective classification society have to be considered in addition.

2.33.2 Rigid seating

L engine

Recommended configuration of foundation

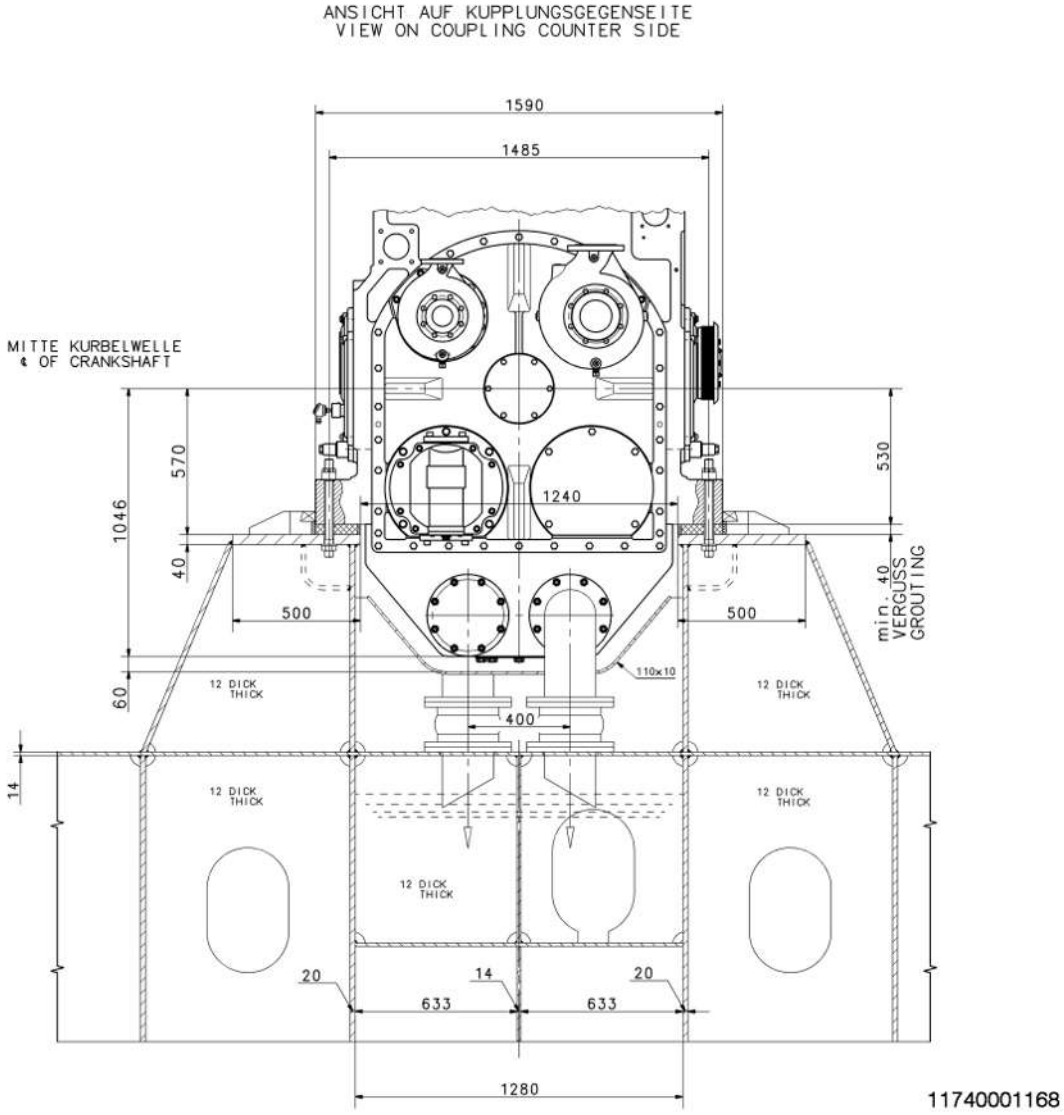

Figure 75: Recommended configuration of foundation L engine

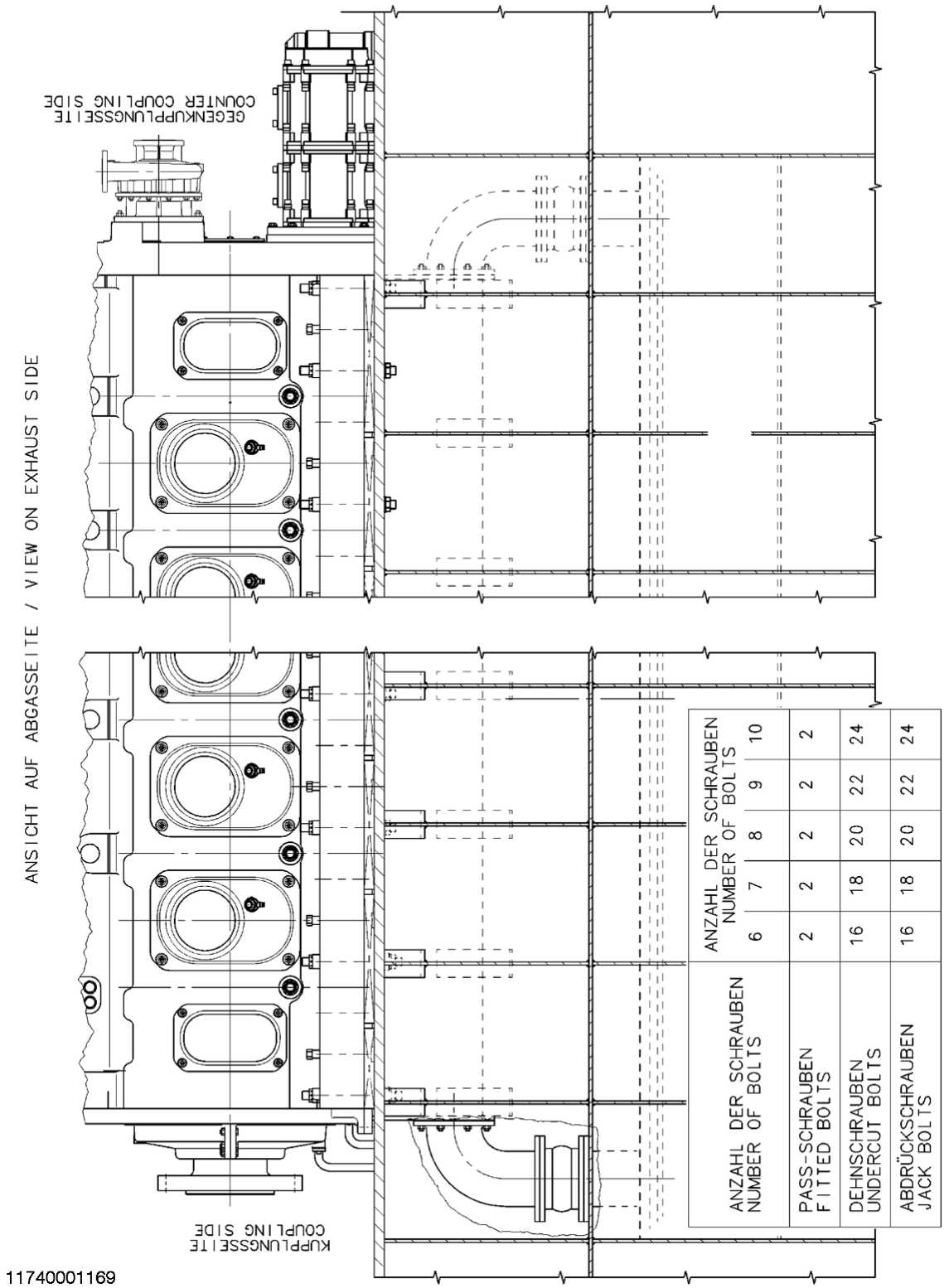

Figure 76: Recommended configuration of foundation L engine – Number of bolts

2025-06-16 - 1.0

Arrangement of foundation bolt holes

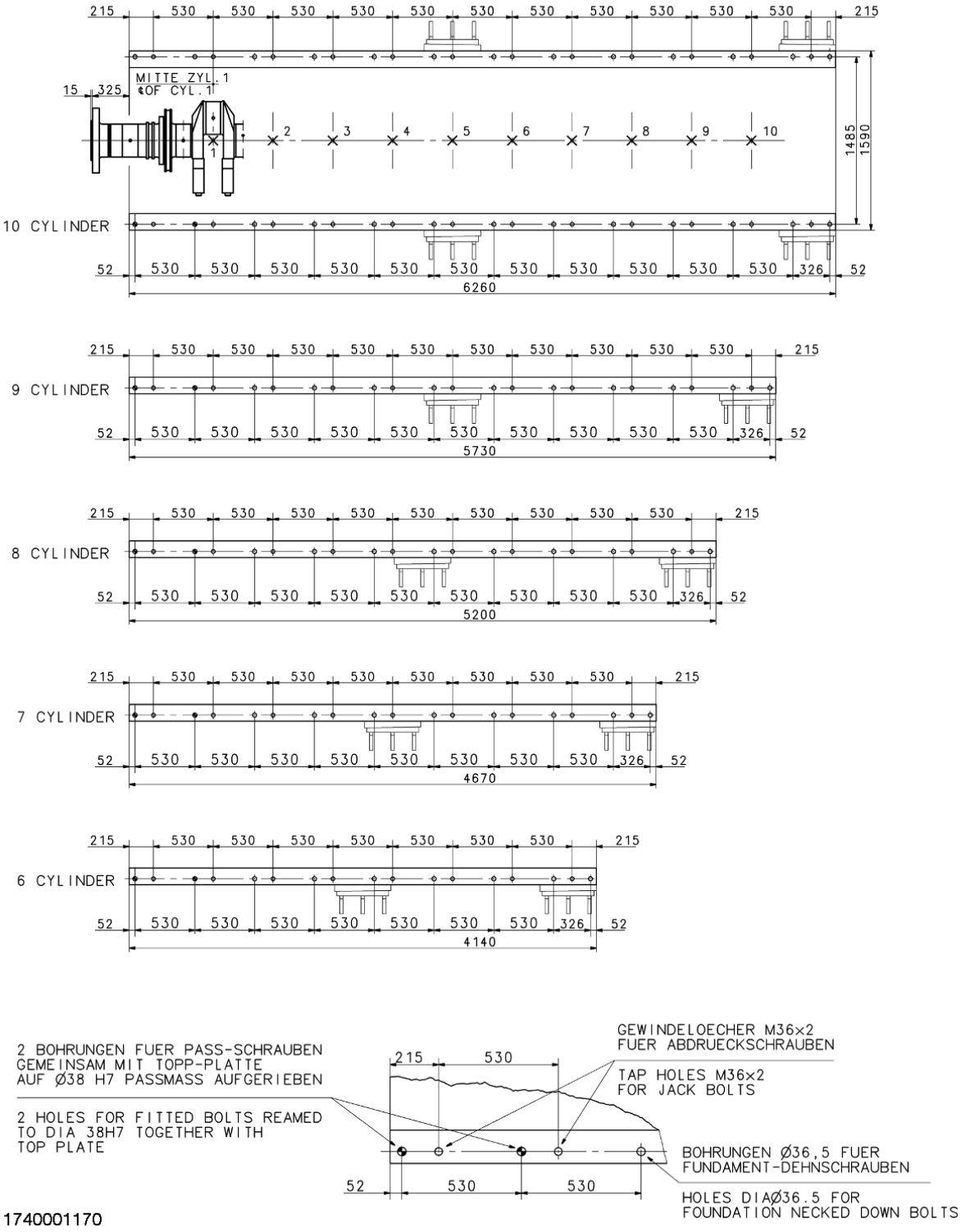

Figure 77: Arrangement of foundation bolt holes L engine

Two **fitted bolts** have to be provided either on starboard side or portside.

In any case they have to be positioned on the coupling side.

Number and position of the **stoppers** have to be provided according to the figure above.

V engine

Recommended configuration of foundation

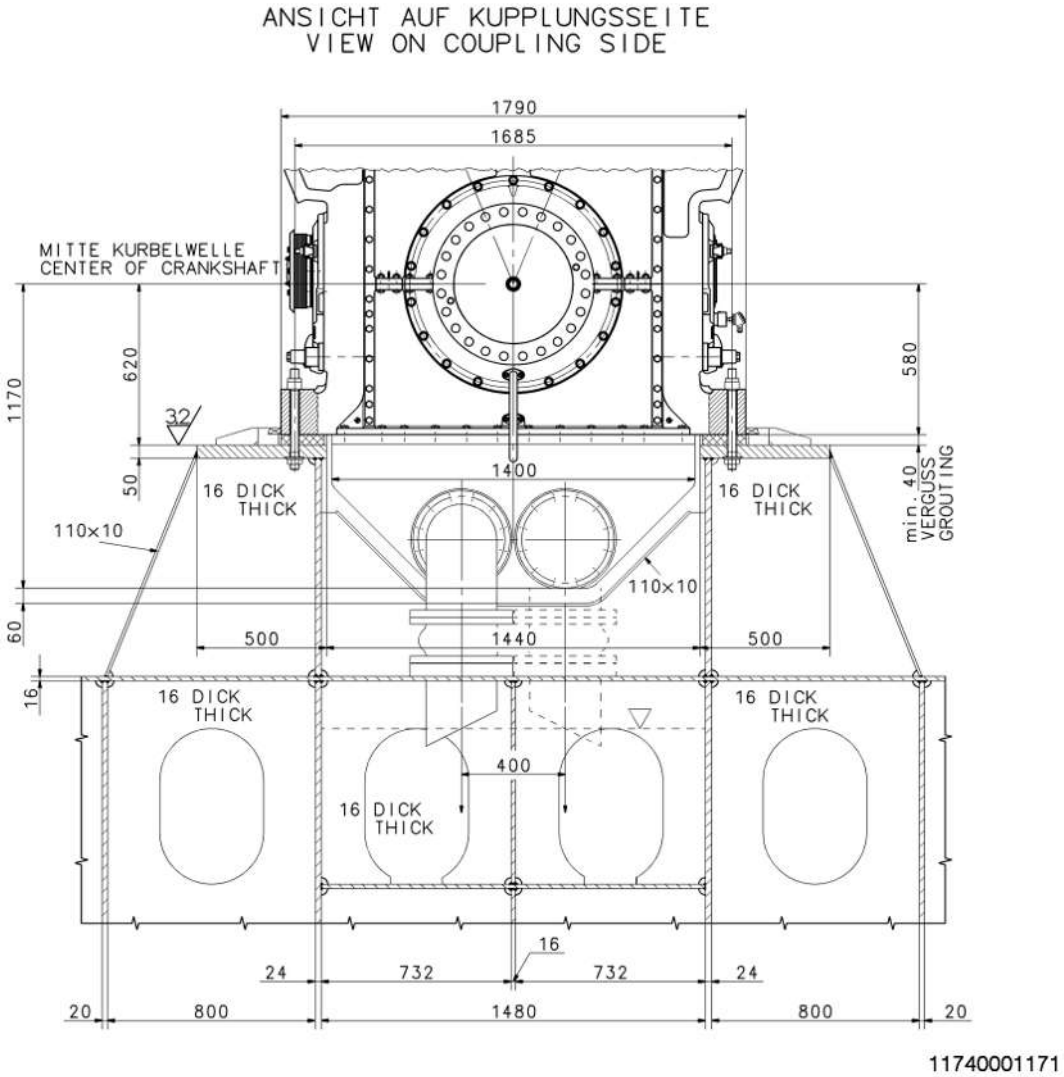

Figure 78: Recommended configuration of foundation V engine

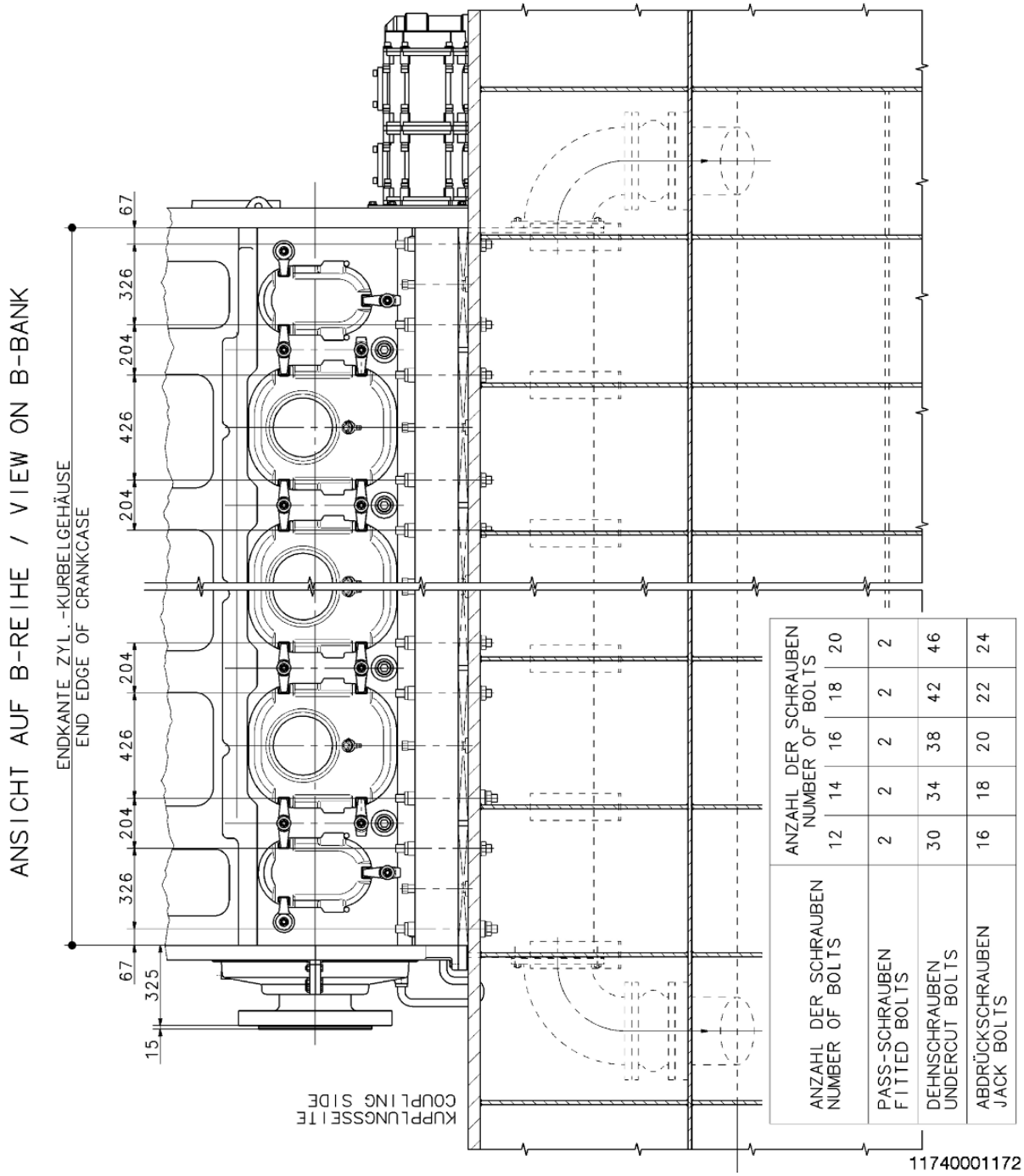

ANZAHL DER SCHRAUBEN NUMBER OF BOLTS	12	14	16	18	20
PASS-SCHRAUBEN FITTED BOLTS	2	2	2	2	2
DEHNSCHRAUBEN UNDERCUT BOLTS	30	34	38	42	46
ABDRÜCKSCHRAUBEN JACK BOLTS	16	18	20	22	24

Figure 79: Recommended configuration of foundation V engine – Number of bolts

2025-06-16 - 1.0

Arrangement of foundation bolt holes

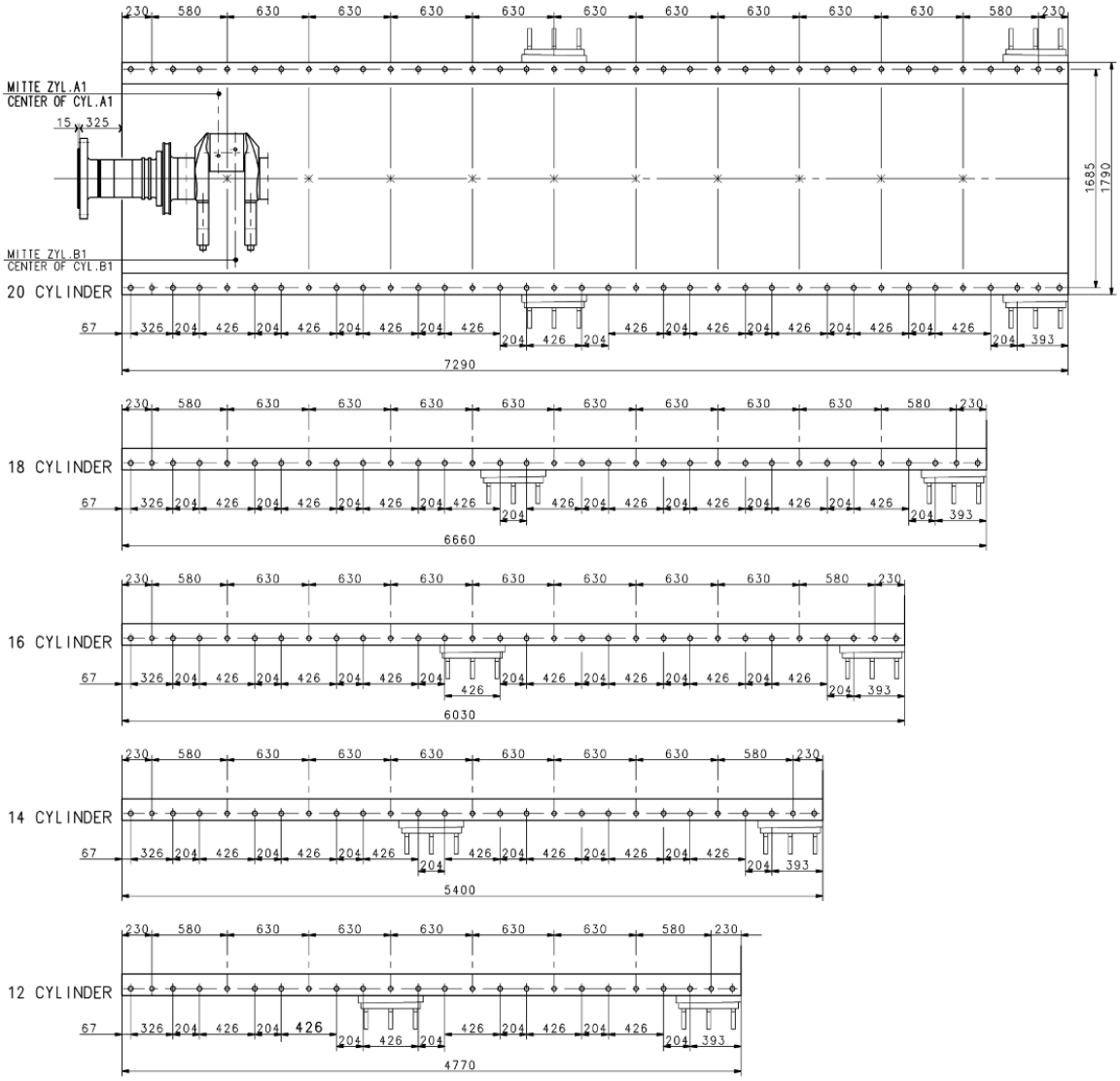

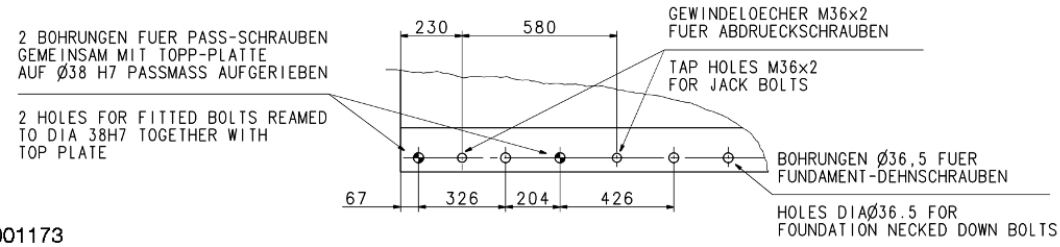

11740001173

Figure 80: Arrangement of the foundation bolt holes V engine

Two **fitted bolts** have to be provided either on starboard side or portside.

In any case they have to be positioned on the coupling side.

2025-06-16 - 1.0

Number and position of the stoppers have to be provided according to the figure above.

2.33.3 Chocking with synthetic resin

Most classification societies permit the use of the following synthetic resins for chocking diesel engines:

- Chockfast Orange
  (Philadelphia Resins Corp. U.S.A)
- Epocast 36
  (H.A. Springer, Kiel)

MAN Energy Solutions accepts engines being chocked with synthetic resin provided:

- If processing is done by authorised agents of the above companies.
- If the classification society responsible has approved the synthetic resin to be used for a unit pressure (engine weight + foundation bolt preloading) of 450 N/cm^2 and a chock temperature of at least 80 °C.

The loaded area of the chocks must be dimensioned in a way, that the pressure effected by the engines dead weight does not exceed 70 N/cm^2 (requirement of some classification societies).

The pretensioning force of the foundation bolts was chosen so that the permissible total surface area load of 450 N/cm^2 is not exceeded. This will ensure that the horizontal thrust resulting from the mass forces is safely transmitted by the chocks.

The shipyard is responsible for the execution and must also grant the warranty.

Tightening of the foundation bolts only permissible with hydraulic tensioning device. Nuts definitely must not be tightened with hook spanner and hammer, even for later inspections.

Tightening of foundation bolts

The tensioning tools with tensioning nut and pressure sleeve are included in the standard scope of supply of tools for the engine.

Dedicated installation values (e.g. pre-tensioning forces) will be given in the customer documentation specific to each project.

2025-06-16 - 1.0

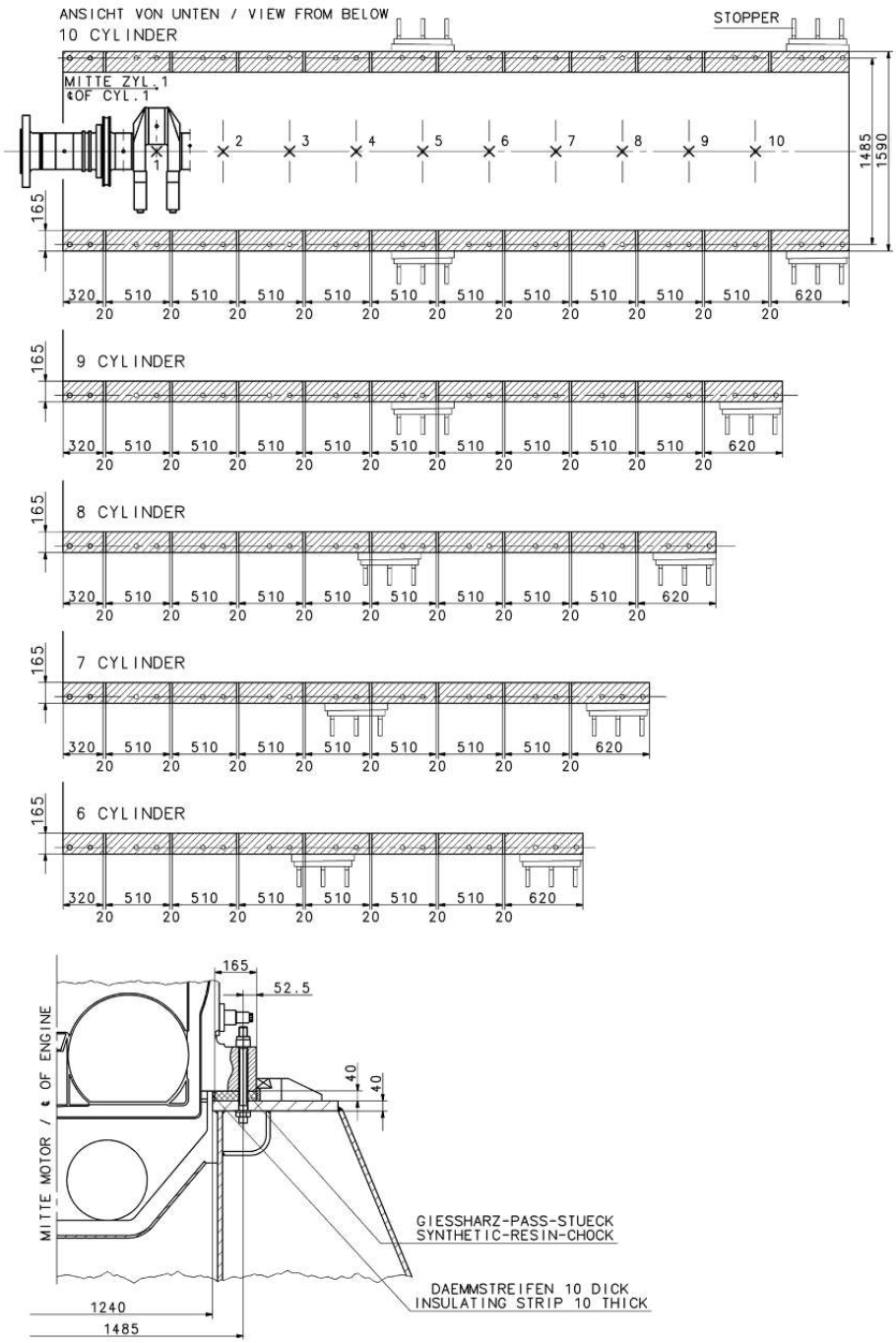

Figure 81: Chocking with synthetic resin L engine

Engine weight	t
6 cylinder	38
7 cylinder	43
8 cylinder	47
9 cylinder	52

2025-06-16 - 1.0

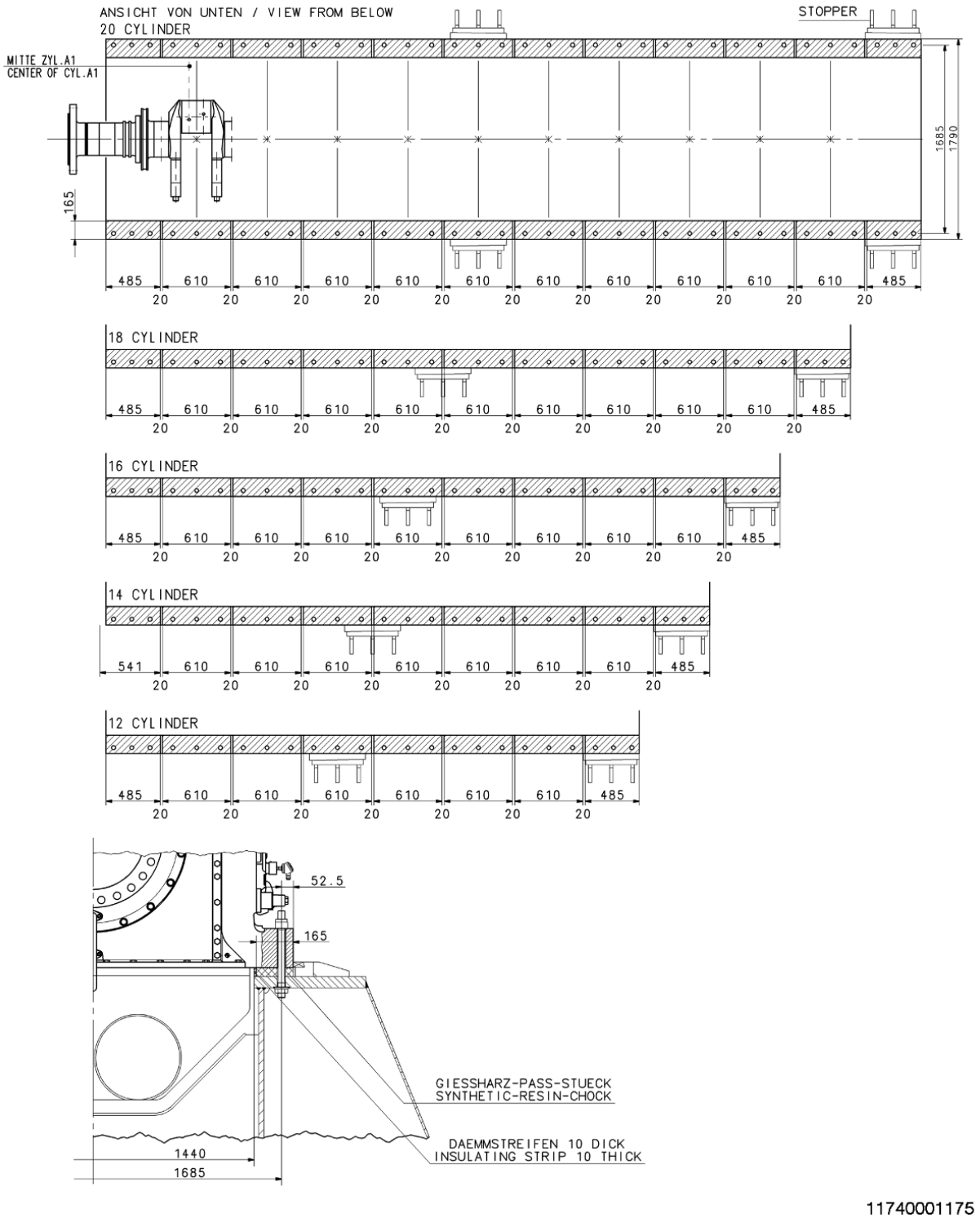

Figure 82: Chocking with synthetic resin V engine

2025-06-16 - 1.0

2.33.4 Resilient seating

General

The vibration of the engine causes dynamic effects on the foundation. These effects are attributed to the pulsating reaction forces due to the fluctuating torque. Additionally, in engines with certain cylinder numbers these effects are increased by unbalanced forces and couples brought about by rotating or reciprocating masses which – considering their vector sum – do not equate to zero.

The direct resilient support makes it possible to reduce the dynamic forces acting on the foundation, which are generated by every reciprocating engine and may – under adverse conditions – have harmful effects on the environment of the engine.

With respect to large engines (bore > 400 mm) MAN Energy Solutions offers two different versions of the resilient mounting (one using conical – the other inclined sandwich elements).

The inclined resilient mounting was developed especially for ships with high comfort demands, e.g. passenger ferries and cruise vessels. This mounting system is characterised by natural frequencies of the resiliently supported engine being lower than approximately 7 Hz. The resonances are located away from the excitation frequencies related to operation at nominal speed.

For average demands of comfort, e.g. for merchant ships, and for smaller engines (bore < 400 mm) mountings using conical mounts can be judged as being fully sufficient. Because of the stiffer design of the elements the natural frequencies of the system are significantly higher than in case of the inclined resilient mounting. The natural frequencies of engines mounted with this kind of mounts are lower than approximately 18 Hz. The vibration isolation is thus of lower quality. It is however, still considerably better than a rigid or semi resilient engine support.

The appropriate design of the resilient support will be selected in accordance with the demands of the customer, i.e. it will be adjusted to the special requirements of each plant.

In both versions the supporting elements will be connected directly to the engine feet by special brackets.

The number, rubber hardness and distribution of the supporting elements depend on:

- The weight of the engine
- The centre of gravity of the engine
- The desired natural frequencies

Where resilient mounting is applied, the following has to be taken into consideration when designing a propulsion plant:

- Resilient mountings always feature several resonances resulting from the natural mounting frequencies. In spite of the endeavour to keep resonances as far as possible from nominal speed the lower bound of the speed range free from resonances will rarely be lower than 70% of nominal speed for mountings using inclined mounts and rarely lower than 85% for mountings using conical mounts. It must be pointed out that these percentages are only guide values. The speed interval being free from resonances may be larger or smaller. These restrictions in speed will mostly require the deployment of a controllable pitch propeller.

2025-06-16 - 1.0

- Between the resiliently mounted engine and the rigidly mounted gearbox or alternator, a flexible coupling with minimum axial and radial elastic forces and large axial and radial displacement capacities should be provided.
- The media connections (compensators) to and from the engine must be highly flexible whereas the fixations of the compensators on the one hand with the engine and on the other hand with the environment must be realised as stiff as possible.
- For the inclined resilient support, provision for stopper elements has to be made because of the sea-state-related movement of the vessel. In the case of conical mounting, these stoppers are integrated in the element.
- In order to achieve a good vibration isolation, the lower brackets used to connect the supporting elements with the ship's foundation are to be fitted at sufficiently rigid points of the foundation. Influences of the foundation's stiffness on the natural frequencies of the resilient support of the engine will not be considered in the mounting design calculation.
- The yard must specify with which inclination related to the plane keel the engine will be installed in the ship. The inclination must be defined and communicated before entering the dimensioning process.

2025-06-16 - 1.0

2.33.5 Recommended configuration of foundation

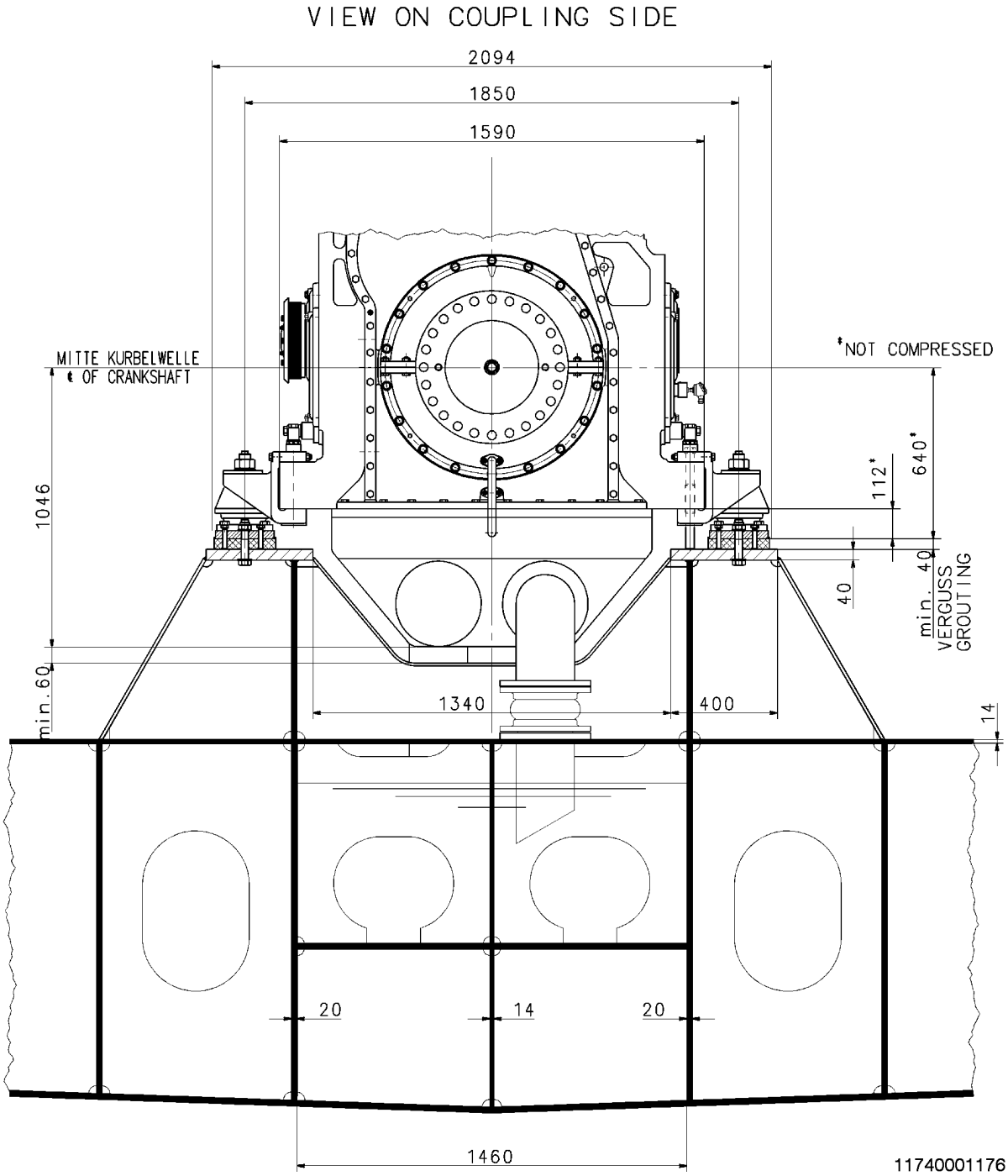

Figure 83: Recommended configuration of foundation, view on coupling side – L engine, resilient seating

2025-06-16 - 1.0

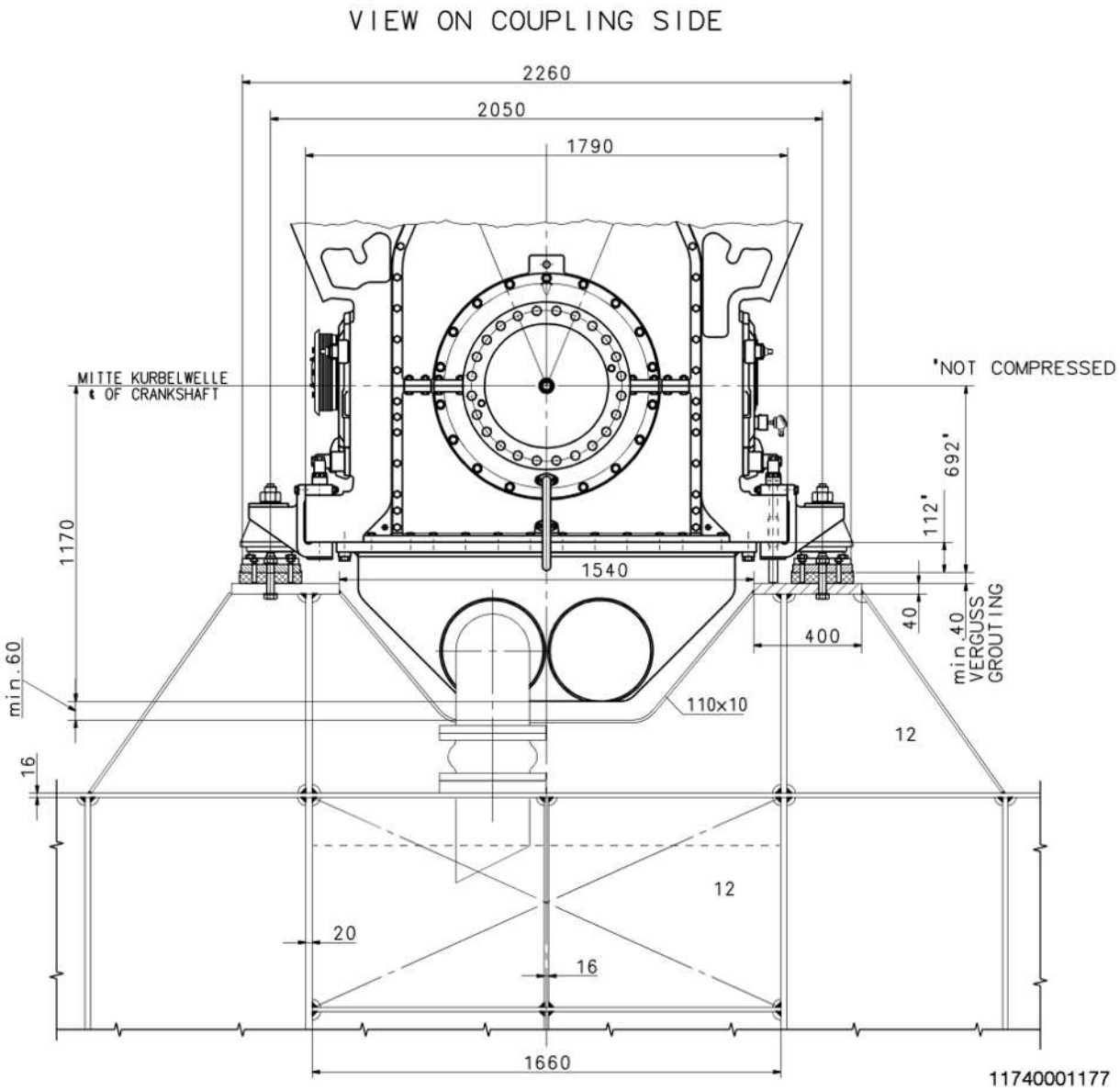

Figure 84: Recommended configuration of foundation, view on coupling side – V engine, resilient seating

2025-06-16 - 1.0

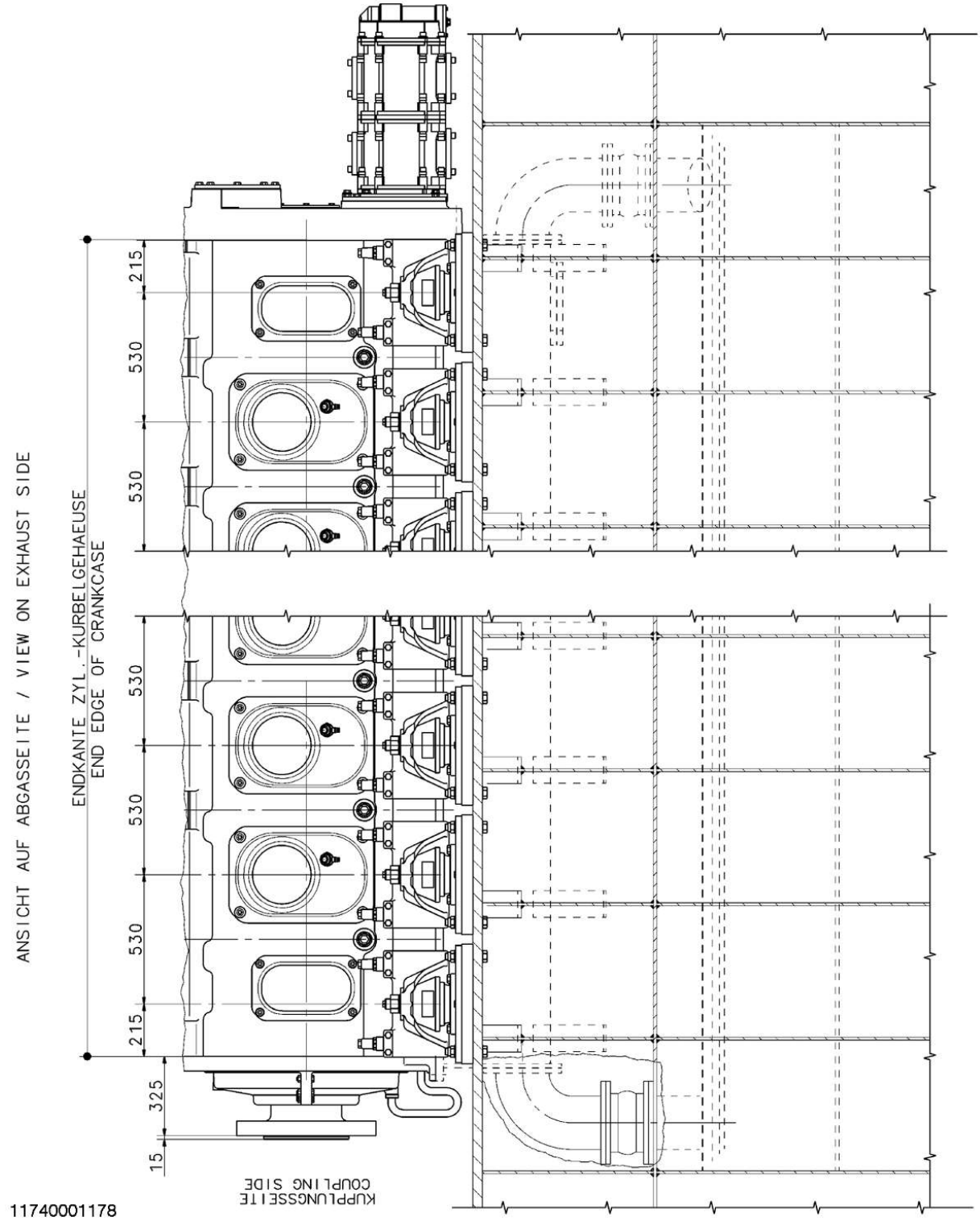

Figure 85: Recommended configuration of foundation, view on exhaust side – L engine, resilient seating

2025-06-16 - 1.0

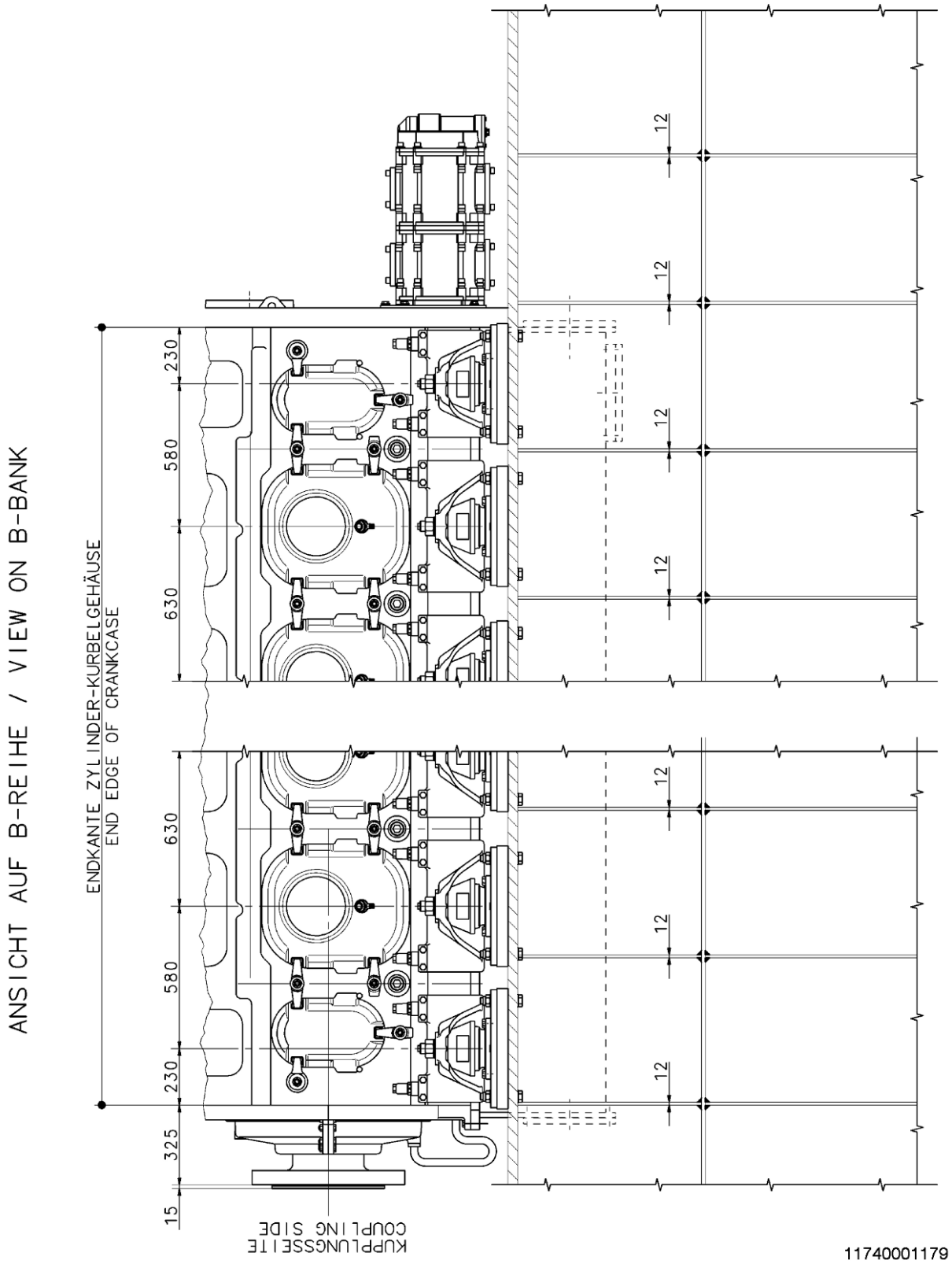

Figure 86: Recommended configuration of foundation, view on exhaust side – V engine, resilient seating

2025-06-16 - 1.0

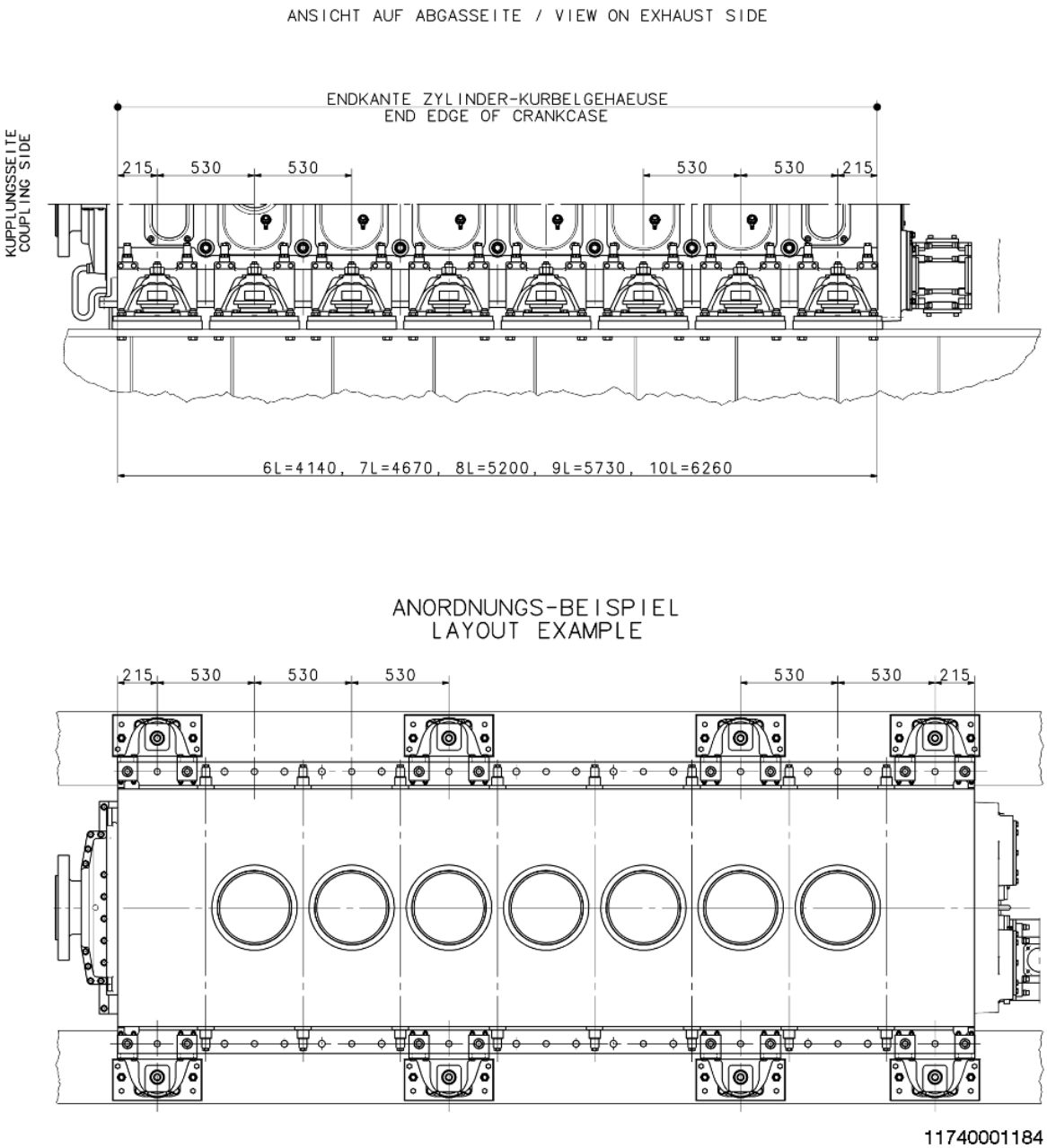

Figure 87: Resilient mounting layout – Example L engine

2025-06-16 - 1.0

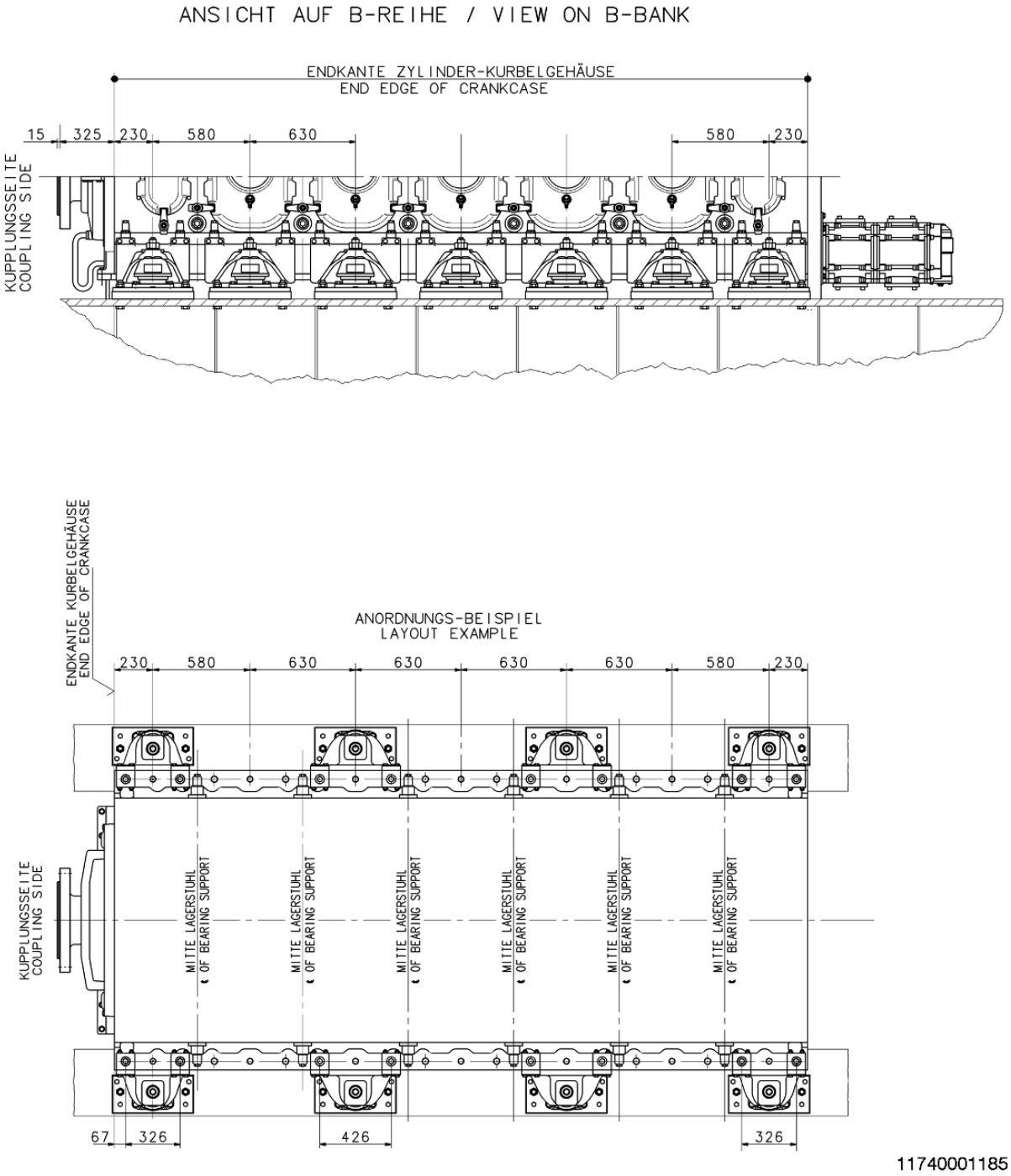

Figure 88: Resilient mounting layout – Example V engine

2025-06-16 - 1.0

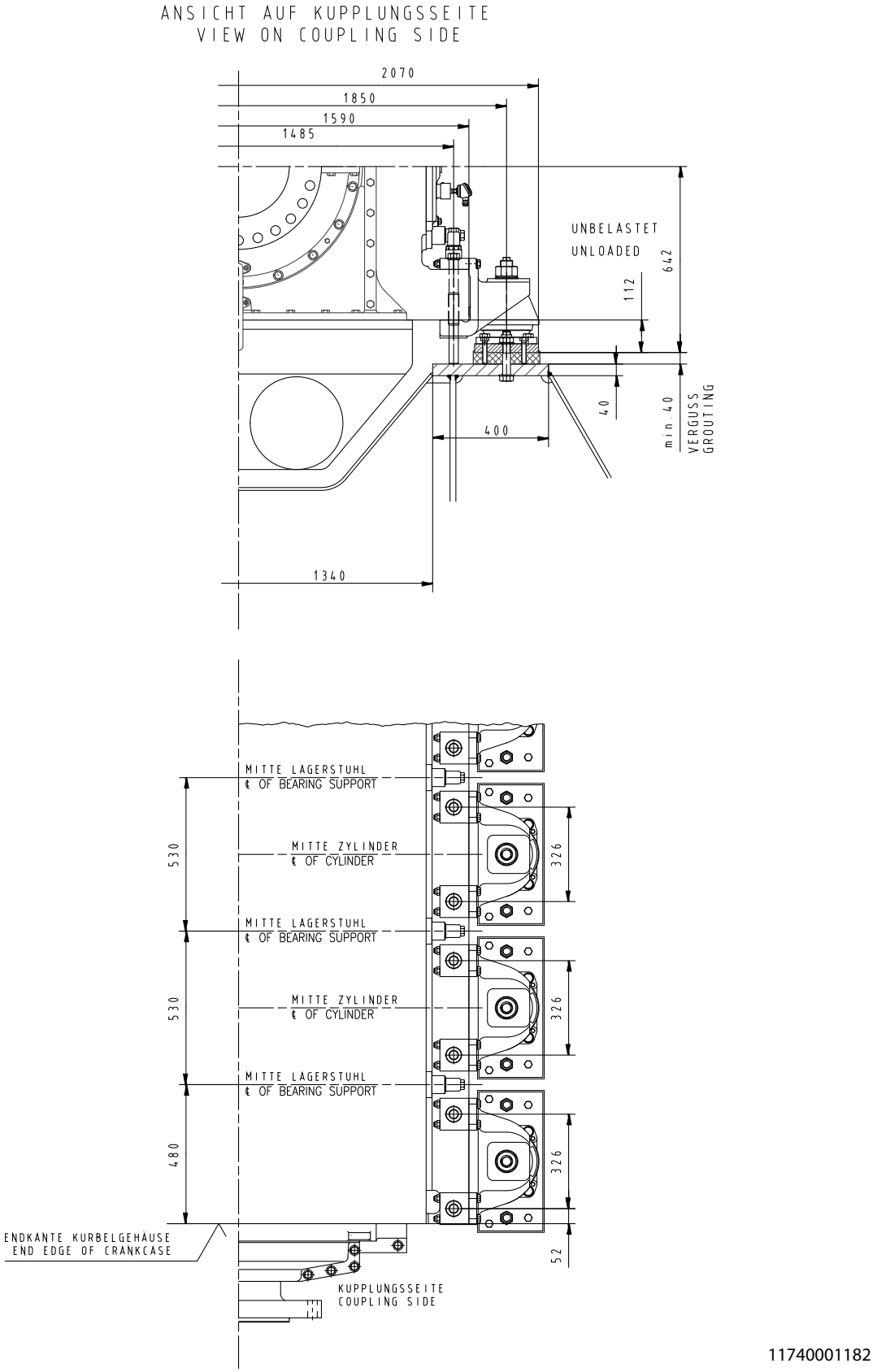

Figure 89: Resilient mounting conical mounts – L engine

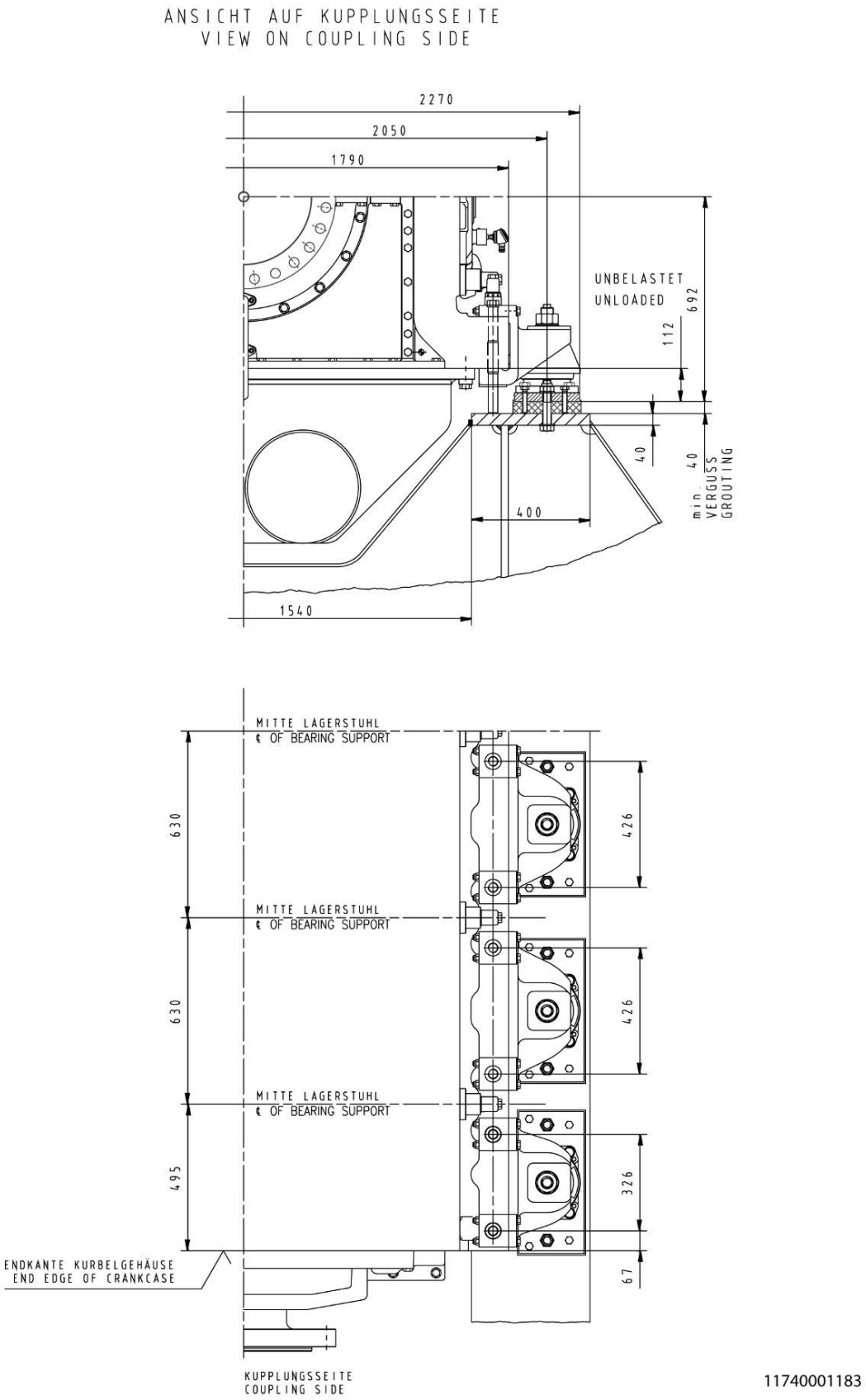

Figure 90: Resilient mounting conical mounts – V engine

2025-06-16 - 1.0

2.33.6 Engine alignment

The alignment of the engine to the attached power train is crucial for trouble-free operation.

Dependent on the plant installation influencing factors on the alignment might be:

- Thermal expansion of the foundations
- Thermal expansion of the engine, alternator or the gearbox
- Thermal expansion of the rubber elements in the case of resilient mounting
- The settling behaviour of the resilient mounting
- Shaft misalignment under pressure
- Necessary axial pre-tensioning of the flex-coupling

Therefore take care that a special alignment calculation, resulting in alignment tolerance limits will be carried out.

Follow the relevant working instructions of this specific engine type. Alignment tolerance limits must not be exceeded.

2025-06-16 - 1.0

3 Engine automation

3.1 SaCoSone system overview

The monitoring and safety system SaCoSone is responsible for complete engine operation, control, alarming and safety. All sensors and operating devices are wired to the engine-attached units. The interface to the plant is done by means of an Interface Cabinet.

During engine installation, only the bus connections, the power supply and safety-related signal cables between the units/modules on engine and the cabinets are to be laid, as well as connections to external modules, electrical motors on the engine and parts on site.

The SaCoSone design is based on highly reliable and approved components as well as modules specially designed for installation on medium-speed engines. The used components are harmonised to an homogenous system. The system has already been tested and parameterised in the factory.

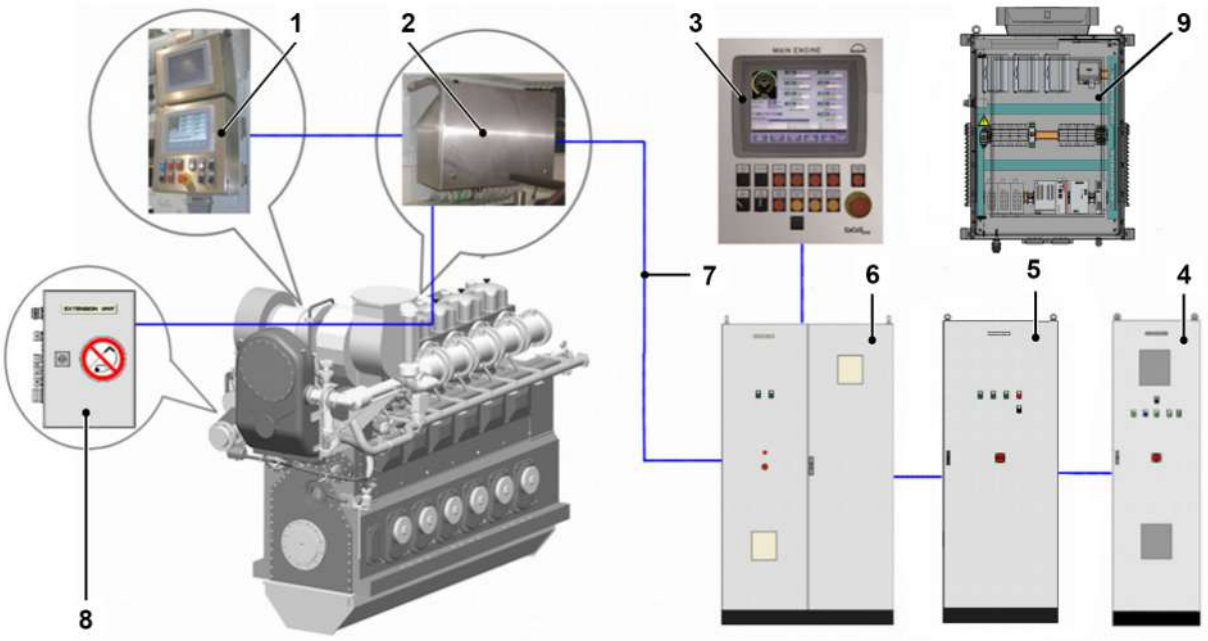

1 Local Operating Panel
2 Control Unit
3 Remote Operating Panel (optional)
4 Driver Cabinet (optional)
5 Auxiliary Cabinet (for stationary applications AC and IC are connected to each other as one unit)
6 Interface Cabinet (for stationary applications AC and IC are connected to each other as one unit)
7 System bus
8 Extension Unit (optional)
9 Data Logging Cabinet

Figure 91: SaCoSone system overview

Control Unit

The Control Unit is mounted on the engine cushioned against any vibration. It includes two identical, highly integrated Control Modules: One for safety functions and the other one for engine control and alarming.

2025-06-16 - 1.0

The modules work independently of each other and collect engine measuring data by means of separate sensors.

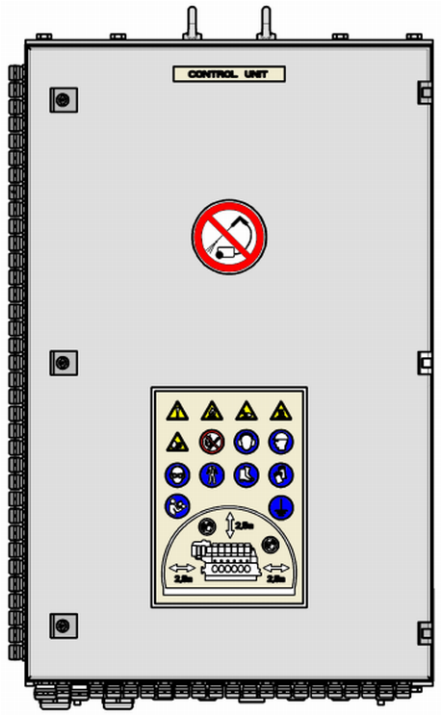

Figure 92: Control Unit

Extension Unit (optional)

The Extension Unit provides additional I/O for the waste gate. The Extension Unit is mounted on the engine.

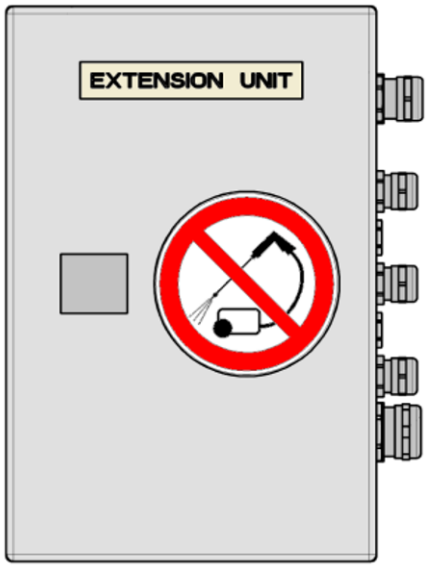

Figure 93: Extension Unit

Interface Cabinet

The Interface Cabinet is a floor-standing cabinet, that optionally will be equipped with an air condition. The Interface Cabinet serves as a communication interface between SaCoSone, the overall plant control system and the

2025-06-16 - 1.0

supply system for the plant. The Interface Cabinet has two Gateway Modules, each of which has input and output channels as well as various interfaces for connecting automated plant/ship systems, ROP and Digital Services.

The Interface Cabinet serves as a central connection point for the following power supplies:

- 230 V AC power supply for the control cabinet lighting, air conditioning system, temperature control valves, condensation heater, etc.

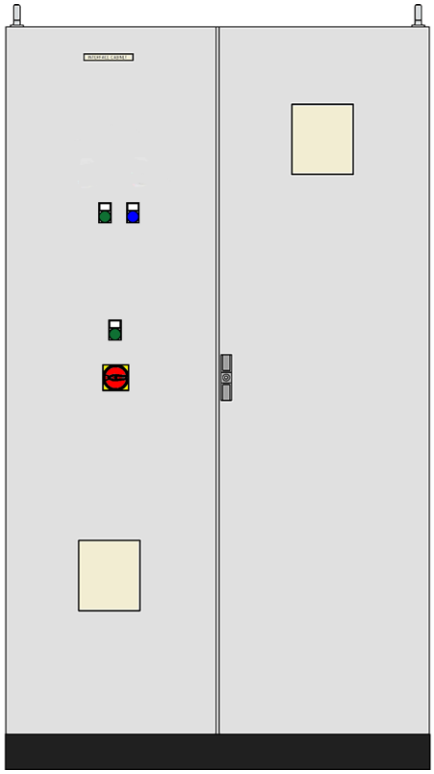

Figure 94: Interface Cabinet

Auxiliary Cabinet

The Auxiliary Cabinet is a floor-standing cabinet, that optionally will be equipped with an air condition. The Auxiliary Cabinet is the central connection point with the power grid of the plant or ship for the 24 V DC, 230 V AC and 400 V AC power supply of the engine.

It contains the starter for the engine oil pumps, temperature control valves, the electrical high-pressure pump for pilot oil injection as well as the Driver Units of the fuel.

The Auxiliary Cabinet serves as a central connection point for the following power supplies:

- 24 V DC power supply and distribution for SaCoSone
- 230 V AC power supply for the control cabinet lighting, air conditioning system, temperature control valves, condensation heater, etc.
- 400 V AC power supply for pumps and actuators on the engine

The supply of the SaCoSone subsystems is done by the Auxiliary Cabinet.

2025-06-16 - 1.0

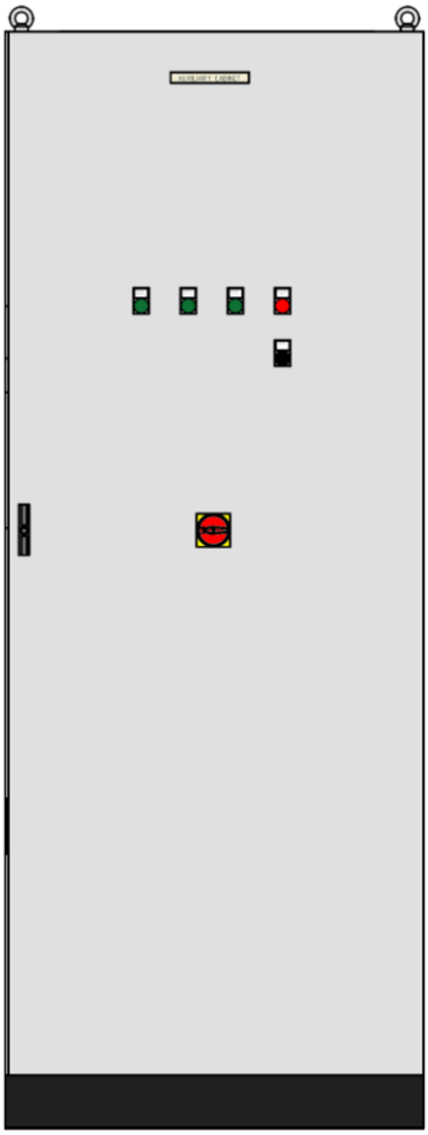

Figure 95: Auxiliary Cabinet

2025-06-16 - 1.0

Driver Cabinet (optional)

The Driver Cabinet is a floor-standing cabinet, that optionally will be equipped with an air condition. The Driver Cabinet contains the frequency converter for the control of the speed actuator as well as the feed-in of the 400 V and 230 V power supply at the engine and the control cabinet lighting and heating.

The 24 V DC power supply is fed via the Auxiliary Cabinet.

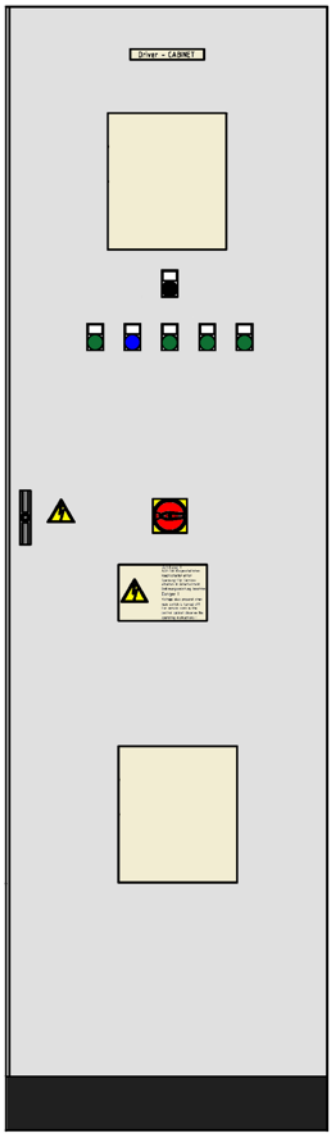

Figure 96: Driver Cabinet

2025-06-16 - 1.0

Data Logging Cabinet

The Data Logging Cabinet is used for maintaining SaCoS components (backup/restore), on-site data logging and diagnostic and to connect to MAN Energy Solutions Digital Services. Intelligent and for security hardened components are installed in the Data Logging Cabinet.

The Data Logging Cabinet enables through highly secure hardware and software the deployment locally or, on demand, over the air of the comprehensive MAN Energy Solutions Digital Services.
MAN Energy Solutions Digital Services include engine remote monitoring of operational data and diagnostics, troubleshooting and advice from MAN Energy Solutions engineers and also software and security updates in a safely manner.

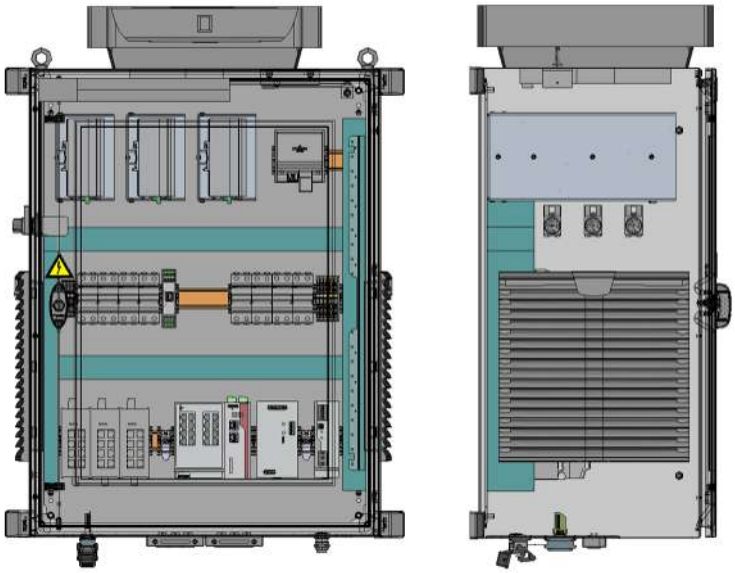

Figure 97: Data Logging Cabinet

Local Operating Panel

The Local Operating Panel is mounted on the engine cushioned against vibration. This panel is equipped with a TFT display for visualisation of all engine operating and measuring data. At the Local Operating Panel the engine can be fully operated. Additional hardwired switches are available for relevant functions.

Stationary engines are not equipped with a backup display as shown on top of the Local Operating Panel.

2025-06-16 - 1.0

Figure 98: Local Operating Panel

2025-06-16 - 1.0

Remote Operating Panel (optional)

The Remote Operating Panel serves for engine operation from a control room. The Remote Operating Panel has the same functions as the Local Operating Panel.

From this operating device it is possible to transfer the engine operation functions to a super-ordinated automation system. In plants with integrated automation systems, this panel can be replaced by IAS.

The panel can be delivered as loose supply for installation in the control room desk.

Figure 99: Remote Operating Panel (optional)

SaCoSone system bus

The SaCoSone system bus connects all system modules. This redundant field bus system provides the basis of data exchange between the modules and allows the takeover of redundant measuring values from other modules in case of a sensor failure.

SaCoSone is connected to the plant by the Gateway Module. This module is equipped with decentral input and output channels as well as with different interfaces for connection to a super-ordinated automation system, the Remote Operating Panel and the Digital Services.

2025-06-16 - 1.0

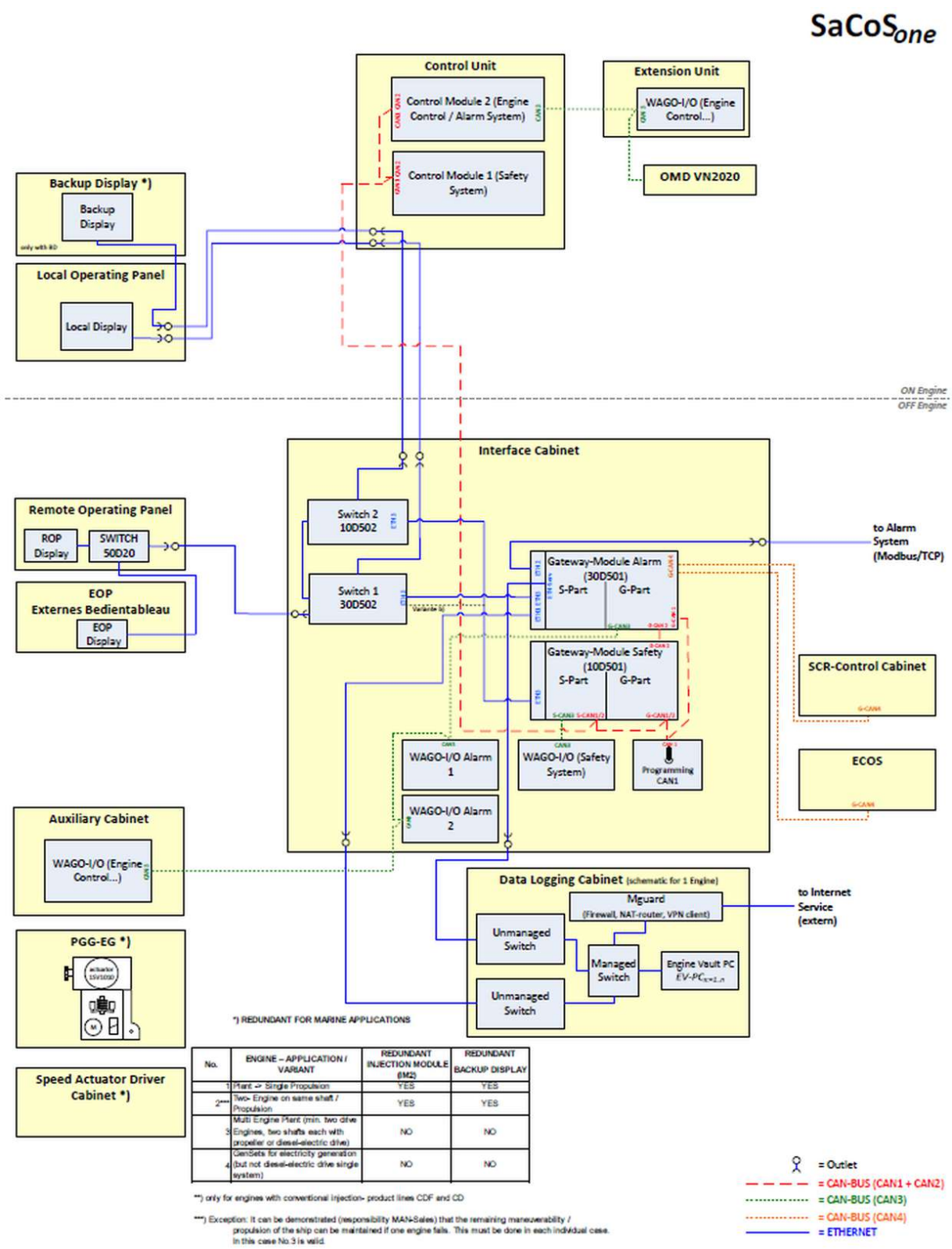

No.	ENGINE – APPLICATION / VARIANT	REDUNDANT INJECTION MODULE (6M2)	REDUNDANT BACKUP DISPLAY
1	Plant -> Single Propulsion	YES	YES
2***	Two- Engine on same shaft / Propulsion	YES	YES
3	Multi Engine Plant (min. two drive Engines, two shafts each with propeller or diesel-electric drive)	NO	NO
4	GenSets for electricity generation (but not diesel-electric drive single system)	NO	NO

**) only for engines with conventional injection- product lines CDF and CD

***) Exception: It can be demonstrated (responsibility MAN-Sales) that the remaining maneuverability / propulsion of the ship can be maintained if one engine fails. This must be done in each individual case. In this case No.3 is valid.

Figure 100: SaCoSone system bus for marine application

2025-06-16 - 1.0

3.1.1 Cybersecurity guidelines

3.1.1.1 Terms, abbreviations and definitions

Term, abbreviation	Definition
GM	Gateway Module
DM	Display module
LOP	Local operating panel
ROP	Remote operating panel (see also WOP, wheel operating panel)
SCR	Selective catalytic reduction
IAS	Integrated alarm system (see also “customer network”)
PMS	Power management system
SDI	SaCoSone device image
EXPERT	MAN Energy Solutions tool for SaCoS parameterisation
Toolbox	(Virtual) device for parameterisation and backup/restore of SaCoS
RDP	Remote Desktop Protocol
CEON	MAN Energy Solutions service for recording engine data
DLC	Data logging cabinet
ER	Engine room
ECR	Engine control room
SaCoSone	Safety and control system on engine
SL	SCR Single Line system (medium speed)
ML	SCR Multi Line system (high speed / 175D)
ROC	Remote operation centre
WBM	Web-based management
IC	Interface cabinet
eToken	SaCoSone security token (Thales Group eToken 5110+)

Table 134: Terms, abbreviations, and definitions

2025-06-16 - 1.0

3.1.1.2 System Overview

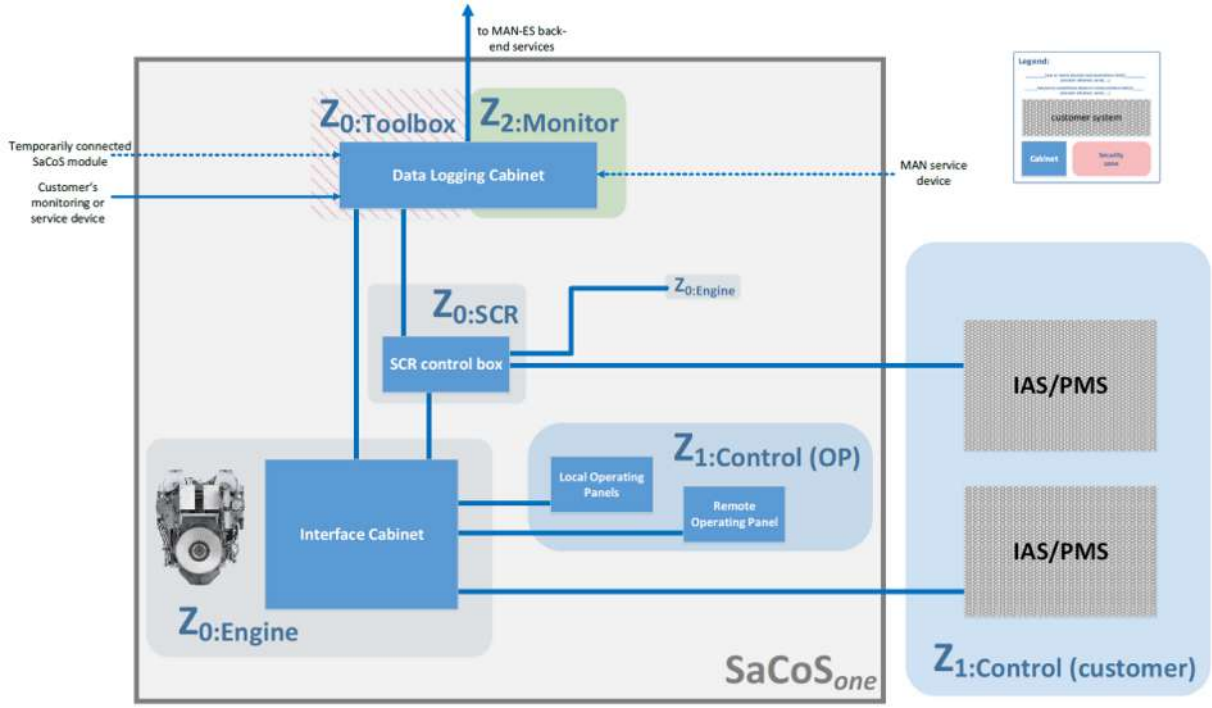

Figure 101: SaCoSone Largebore with SCR and EngineVault: Zones and connections (simplified)

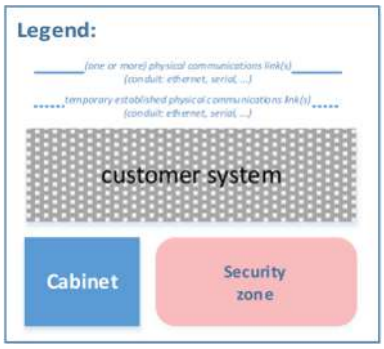

Figure 102: SaCoSone Largebore with SCR and EngineVault: Zones and connections (simplified) – Legend

Fig. *SaCoSone Largebore with SCR and EngineVault: Zones and connections (simplified)*:
Shows a simplified overview of the SaCoSone system (Largebore version with SCR and EngineVault), and some of the relevant zones and connections.

Fig. *SaCoSone Largebore with SCR and EngineVault: Zones and connections (simplified) – Legend*:
Shows the legend for the simplified overview of the SaCoSone system (Largebore version with SCR and EngineVault).

The system is divided into the following main security zones:

- $Z_{0:Engine}$: Devices in this zone implement the main functionality of the engine control system
- $Z_{0:SCR}$: Devices in this zone implement the SCR functionality and enable local monitoring and control of the SCR system.

2025-06-16 - 1.0

- $Z_{1:Control\ (OP)}$: This zone contains the control panels (including, for example, the LOP and ROP) that enable local monitoring and control of the engine control system.
- $Z_{1:Control\ (customer)}$: This zone contains the ship's integrated alarm and/or power management system(s) (IAS/PMS)
- $Z_{2:Monitor}$ and $Z_{0:Toolbox}$: These zones include virtualised and physical devices that implement local/remote monitoring and logging of control system data, and enable local/remote system parameterisation, including restoring system backups to SaCoS modules that are temporarily connected to the data logging cabinet (DLC) for this purpose. To obtain limited, secure and interactive access to the Jumphost (also called *Engine Vault PC* in SaCoS) in the DLC and to use the described functionality, the user can connect to the system with their own device via the network connection provided for this purpose in the DLC.

The majority of the devices making up the control system are installed in locked control cabinets or units. These must be set up in restricted locations such as engine rooms (ER) and engine control rooms (ECR).

3.1.1.3 Physical security of SaCoS

Due to their design, some control system devices and communication links must be physically protected against unauthorised access at all times (i.e., including during commissioning). Access to the control system must be logged.

The security of these protective measures should be assessed by the customer, taking into account the system context, purpose and location, assumptions about current and future threats to the customer’s business, and applicable regulations.

3.1.1.4 Secure access and storage of SaCoS data

It is necessary to keep the data created by or for SaCoS secure and protected against access by third parties.

3.1.1.5 Secure use of the Engine Vault PC in the DLC

It is the customer’s responsibility to use the Engine Vault PC securely in accordance with the operating instructions.

3.1.1.6 Securing Z1:Control(Customer)

$Z_{1:Control(Customer)}$ must be a trusted network in the sense of IACS UR E27.

A compromised SaCoS can also pose a threat to customer networks and devices, and infect or compromise the customer systems within them. The operator/integrator can implement additional measures such as installing additional network security devices to protect against this threat.

3.1.1.7 Maintaining network segmentation

Network segmentation is one of SaCoSone's key protection measures. Therefore, the network structure set up by MAN Energy Solutions must not be changed.

Specifically, the following guidelines should be adhered to:

2025-06-16 - 1.0

- Individual network segments must not be bridged (e.g. by connecting a device to several segments at the same time, connecting network switches from different segments to each other, or connecting devices from one segment to other segments).
- No additional devices may be connected to the SaCoS network segments. This does not apply to temporary connections for proper commissioning or service purposes (e.g. loading new control unit software) using suitable tools. The tools used must meet general cybersecurity requirements and, in particular, the applicable requirements of the relevant standards (e.g. IACS UR E27). The user is responsible for proper use. Only devices managed by the user's respective IT organisation (operator, integrator, service, manufacturer, ...) may be used.
- The physical switches on the DLC that enable and disable the remote network connection of MAN Energy Solutions service staff to the Engine Vault PC for remote maintenance (label on the cabinet), as well as the Engine Vault PC's network access to the Gateway and Display Modules (label on the cabinet) for parameterisation, must normally be in the "disabled" position. Access should only be activated temporarily, only when required, only by authorised staff, and should be switched off again as soon as possible after completion of the work. Remote access (remote) to Engine Vault PC may only be enabled upon explicit and authenticated request from MAN Energy Solutions. Only those physical switches that are necessary for the functionality or activity actually required should be activated.

3.1.1.8 Preparation for security incidents

Residual risks may remain even if the present guidelines are followed. The customer should prepare for possible security incidents in order to be able to react to them quickly. This includes the creation of an *incident response plan*, which should address the following points, among others:

- Obtain spare parts to replace SaCoSone modules that have failed or been compromised due to an attack.
- If changes are made to the system (e.g. parameterisation of the system), these changes should be saved accordingly.
- Report the security incident to MAN Energy Solutions via a secure channel and follow the instructions.
- Save all relevant data for all causes (may require assistance from the engine manufacturer's 1st level support). This includes, but is not limited to, the access logs and general audit logs generated by the customer, customer devices, and the plant.
- Analyse the data and take steps to address the vulnerability that led to the incident.

The customer is also instructed to monitor the system for indications of a possible security incident to the extent possible.

3.1.1.9 Safe disposal

The customer is responsible for the security of potentially sensitive data when disposing of the devices.

3.1.1.10 User account management

The operator and service personnel are responsible for managing the access data for SaCoS devices.

2025-06-16 - 1.0

3.1.1.11 Security Incident Report

The security incidents concerning SaCoSone should be reported to MAN PrimeServ.

3.2 Power supply and distribution

The plant has to provide electric power for the automation and monitoring system. In general an uninterrupted 24 V DC power supply is required for SaCoSone.

An uniterruptible power supply for the speed governor must also be provided. In case of electronic speed governor with mechanical backup (PGA-EG or PGG-EG) an uninterruptible 24 V DC power supply is required.

For supply of the electronic fuel actuator an uninterruptible 230 V AC distribution must be provided.

2025-06-16 - 1.0

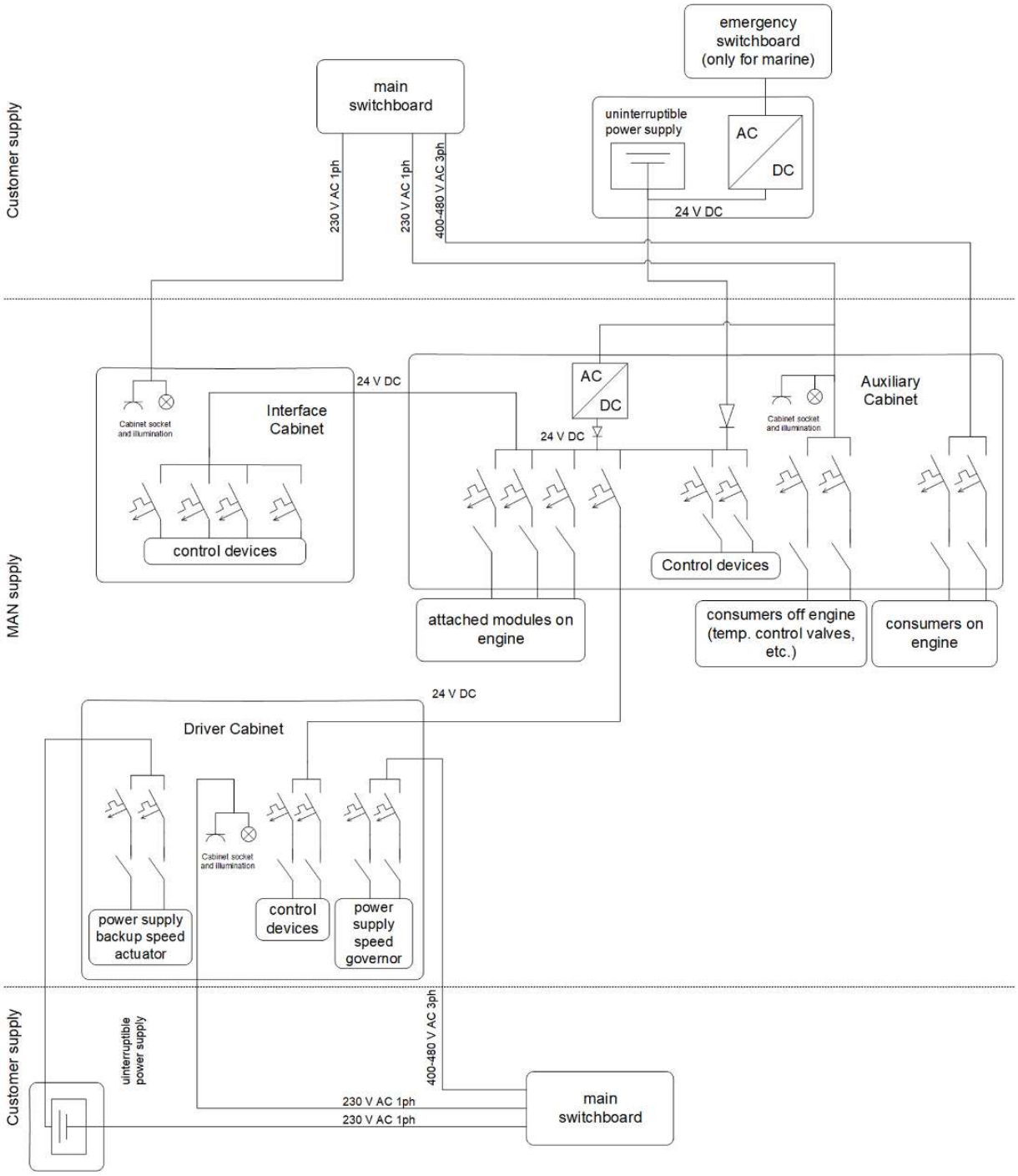

Figure 103: Power supply for SaCoSone

Required power supplies

Voltage	Consumer	Notes
230 V 50/60 Hz	SaCoSone Interface Cabinet	Cabinet illumination, socket, anticondensation heater
24 V DC	SaCoSone Auxiliary Cabinet	All SaCoSone components in the Interface Cabinet and on the engine
230 V 50/60 Hz	SaCoSone Auxiliary Cabinet	Cabinet illumination, socket, temperature control valves, anti-condensation heater
400 – 480 V 50/60 Hz	SaCoSone Auxiliary Cabinet	Power supply for consumers on engine
230 V 50/60 Hz	Driver Cabinet	Cabinet illumination, socket, temperature control valves, anti-condensation heater
230 V 50/60 Hz	Driver Cabinet	UPS-buffered power supply for speed actuator backup
400 – 480 V 50/60 Hz	Driver Cabinet	Power supply for speed actu-ator
230 V 50/60 Hz	Data Logging Cabinet	All SaCoSone components in the Data Logging Cabinet

Table 135: Required power supplies

Galvanic isolation

A fault in an IT mains (see IEC 60364-1) affects the entire galvanic island formed by the IT network. If different engines are fed from galvanically connected power supplies, then a fault in one of the engines can also affect all other engines. It is therefore the subject of the system risk assessment to determine whether engines may be galvanically connected to each other. It is strongly recommended not to supply multiple engines from galvanically connected power supplies in order to limit the impact of errors and facilitate troubleshooting. For the same reason, the power supplies of the engines must be galvanically isolated from the power supplies for other parts of the system.

Example:

The following overviews show the exemplary layout for a plant consisting of four engines. In this example the 24 V DC power supply without UPS is the isolated unit. The UPS-buffered 24 V DC power supply is used for several engines. In this case there must be the possibility to disconnect the UPS from each engine (e.g. via double-pole circuit breaker) for earth fault detection.

2025-06-16 - 1.0

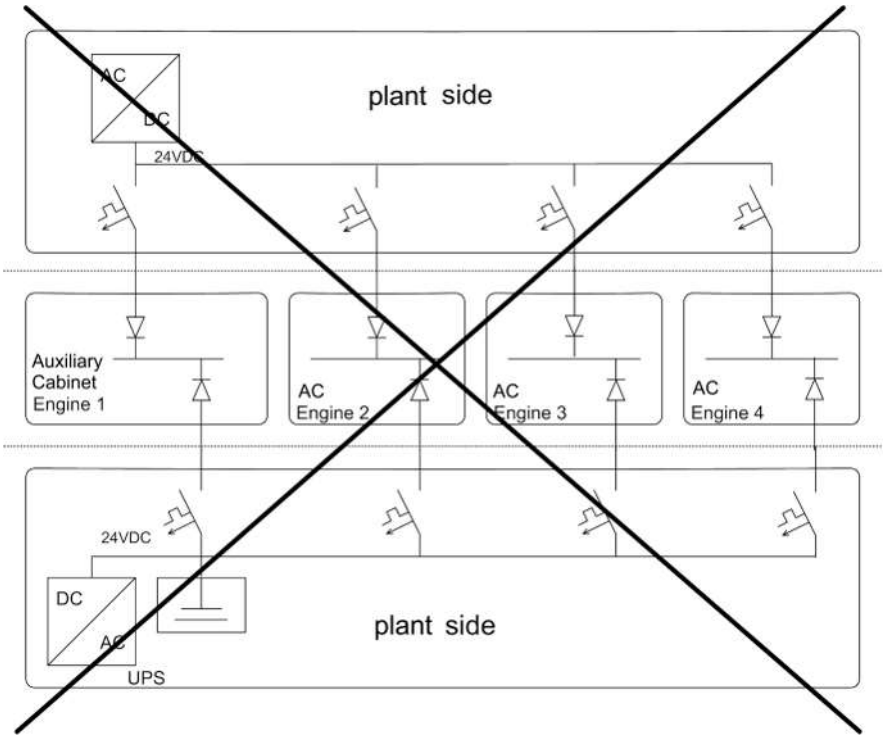

Figure 104: Wrong installation of the 24 V DC power supplies

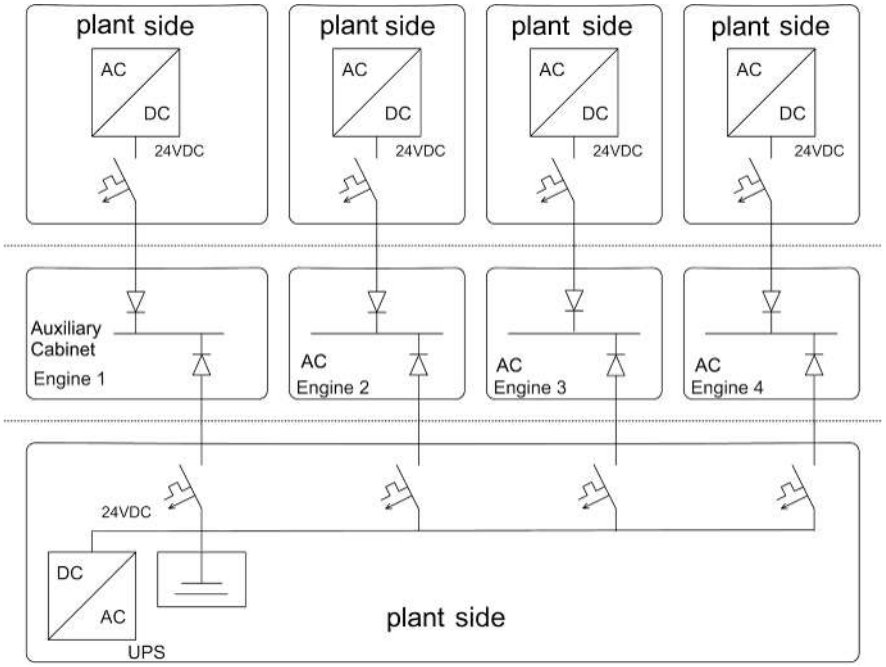

Figure 105: Correct installation of the 24 V DC power supplies

2025-06-16 - 1.0

3.3 Safety architecture

Connection of external digital outputs to safety-relevant dual-channel digital inputs of SaCoSone

SaCoS owns a double-channel safety architecture. External emergency stops or automatic shutdowns have to support this architecture to avoid false alarms of the plausibility check. Supporting could be done by having a double-channel architecture too (recommended by MAN Energy Solutions) or by having a single-channel architecture effecting both channels. To support single-channel architectures of marine applications an additional box is necessary, which is effecting both channels and provide a wire break detection (see right figure below).

Note:
A single-channel architecture has a higher probability of failure than a double-channel architecture.

MAN Energy Solutions will not be responsible for any increase of risk, which might be caused by the use of such a single-channel architecture instead of double-channel architecture.

The relais have to be energized on demand of the safety function. The wire-break-monitor will be de-energized at wire-break.

Attention, wire-break-monitoring is not supported for all variants of SaCoS at redundant inputs (because a plausibility check of the two channels, when the safety function is requested, is sufficient to detect errors).

2025-06-16 - 1.0

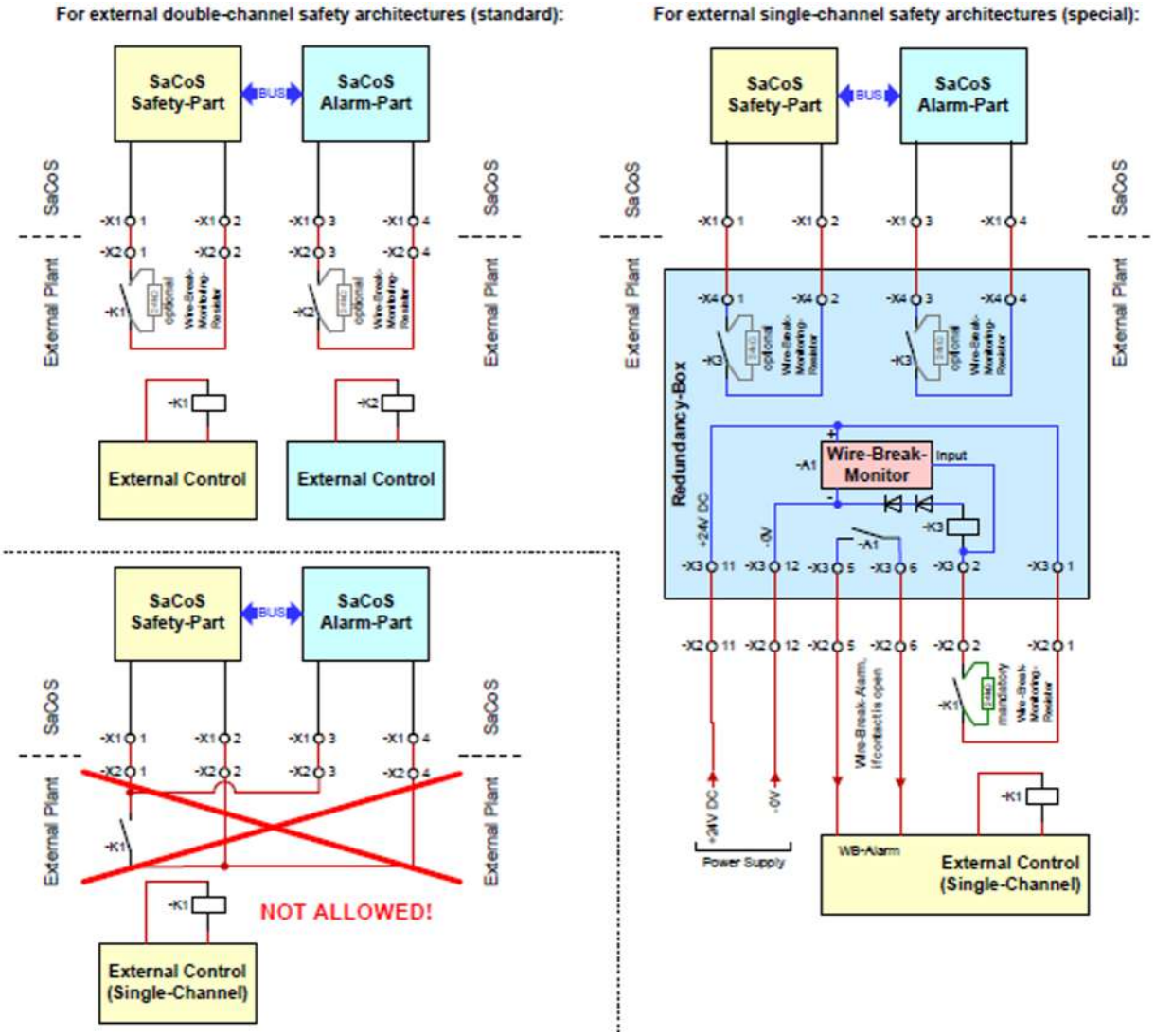

WARNING It is not allowed to connect both redundant channels of SaCoS direct which each other without redundancy box and connect it then to the external single channel.

Connection of single-channel digital inputs to safety-relevant dual-channel digital outputs

Where double-channel outputs are provided by MAN Energy Solutions for safety related functions, they have to be connected to a double-channel inputs at site. Where this is not possible, due to the lack of a double-channel architecture in the external controlling system, then a single-channel input can be converted to a double-channel architecture with the circuit proposed in this document.

MAN Energy Solutions will not be responsible for any increase of risk, which might be caused by the use of such a single-channel control.

The relais are deenergized in normal case and energized at failure. The main contacts are open in normal case and closed at failure (the feedback contacts must be complementary). All relays must have forcibly guided contacts.

2025-06-16 - 1.0

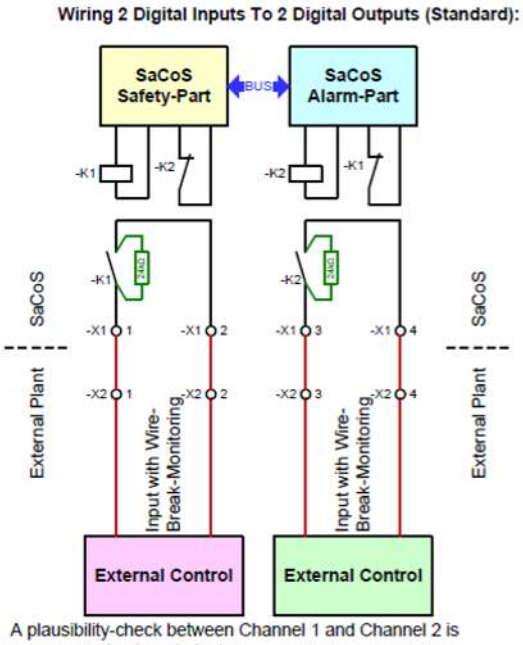

A plausibility-check between Channel 1 and Channel 2 is necessary at external plant.

A wire-break monitoring is optional at double-channel architectures, if plausibility-check is implemented.

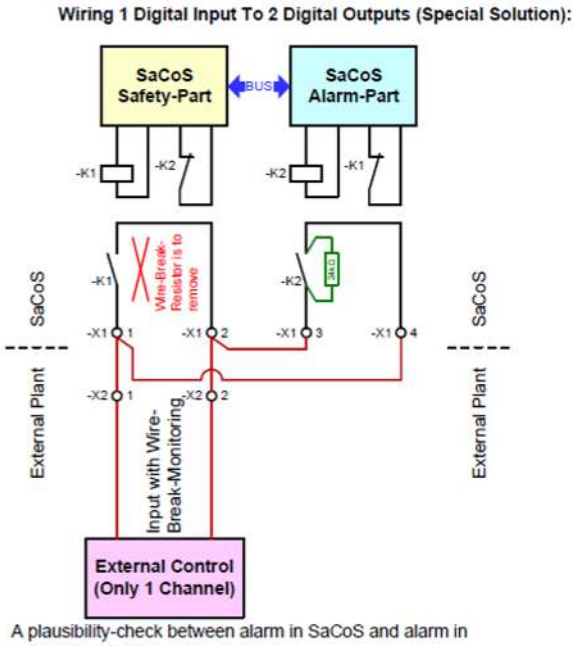

A plausibility-check between alarm in SaCoS and alarm in external control is necessary.

A wire-break monitoring is mandatory at single-channel architectures.

3.4 Operation

Control station changeover

The operation and control can be done from both operating panels. Selection and activation of the control stations is possible at the Local Operating Panel. On the displays, all the measuring points acquired by means of SaCoSone can be shown in clearly arranged drawings and figures. It is not necessary to install additional speed indicators separately.

The operating rights can be handed over from the Remote Operating Panel to another Remote Operating Panel or to an external automatic system. Therefore a handshake is necessary.

For applications with Integrated Automation Systems (IAS) also the functionality of the Remote Operating Panel can be taken over by the IAS.

2025-06-16 - 1.0

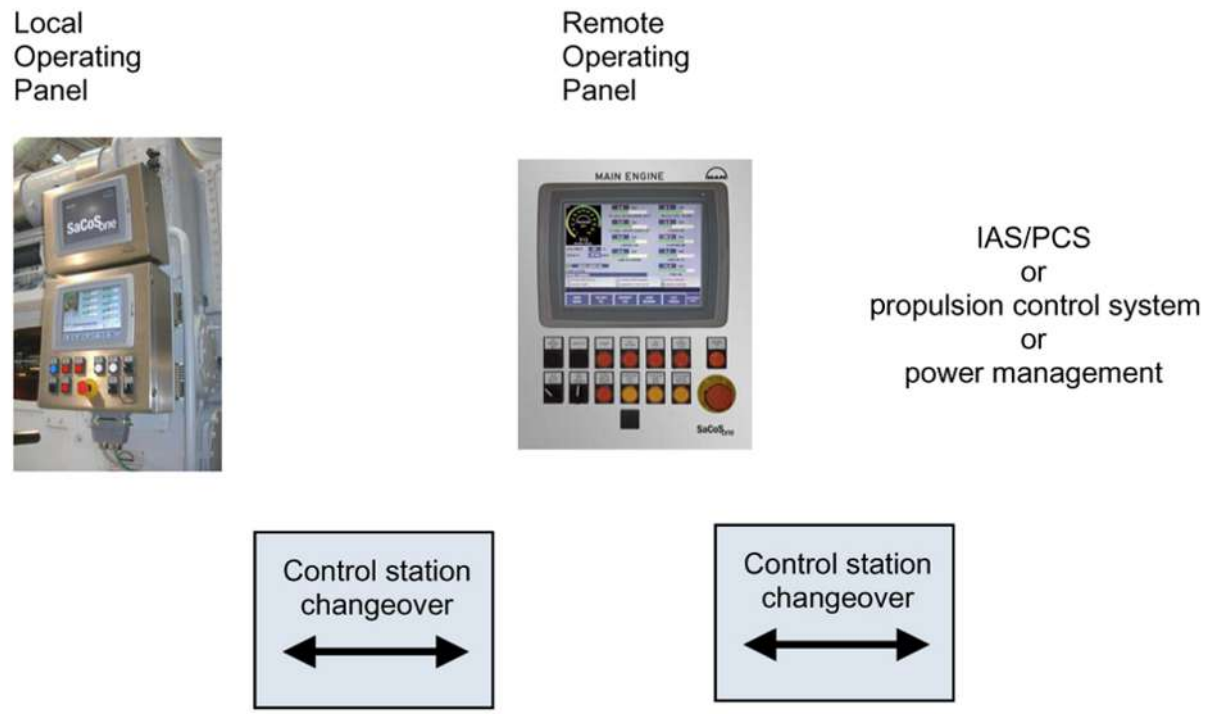

Figure 106: Control station changeover

Speed setting

In case of operating with one of the SaCoSone panels, the engine speed setting is carried out manually by a decrease/increase switch button.
If the operation is controlled by an external system, the speed setting can be done either by means of binary contacts (e.g. for synchronisation) or by an active 4 – 20 mA analogue signal alternatively. The signal type for this is to be defined in the project planning period.

Operating modes

For alternator applications:

- Droop (5-percent speed increase between nominal load and no load)

For propulsion engines:

- Isochronous
- Master/Slave Operation for operation of two engines on one gear box

The operating mode is pre-selected via the SaCoS interface and has to be defined during the application period.

Details regarding special operating modes on request.

3.5 Functionality

Safety functions

The safety system monitors all operating data of the engine and initiates the required actions, i.e. load reduction or engine shutdown, in case any limit values are exceeded. The safety system is separated into Control Module and

2025-06-16 - 1.0

Gateway Module. The Control Module supervises the engine, while the Gateway Module examines all functions relevant for the security of the connected plant components.

The system is designed to ensure that all functions are achieved in accordance with the classification societies' requirements for marine main engines.

The safety system directly influences the emergency shut-down and the speed control.

In addition to the provisions made to permit the internal initiation of demands, binary and analogue channels have been provided for the initiation of safety functions by external systems.

Load reduction

The exceeding of certain parameters requires a load reduction to 60 %. The safety system supervises these parameters and requests a load reduction, if necessary. The load reduction has to be carried out by an external system (IAS, PMS, PCS). For safety reasons, SaCoSone will not reduce the power by itself.

Auto shutdown

Auto shutdown is an engine shutdown initiated by any automatic supervision of either engine internal parameters or mentioned above external control systems. If an engine shutdown is triggered by the safety system, the emergency stop signal has an immediate effect on the emergency shutdown device, and the speed control.

Some auto shutdowns may also be initiated redundantly by the alarm system.

Emergency stop

Emergency stop is an engine shutdown initiated by an operator's manual action by pressing an emergency stop button.

Note:
A manual emergency stop stops the engine, but does not affect the interface signals requesting the auxiliary units. During the integration, the respective integrator must determine how the system reacts. Therefore manual emergency stops are provided to the plant explicit.

Override

During operation, safety actions can be suppressed by the override function for the most parameters. The override has to be activated preventively. The scope of parameters prepared for override are different and depend to the chosen classification society. The availability of the override function depends on the application.

Alarming

The alarm function of SaCoSone supervises all necessary parameters and generates alarms to indicate discrepancies when required.

Self-monitoring

SaCoSone carries out independent self-monitoring functions. Thus, for example the connected sensors are checked constantly for function and wire break. In case of a fault SaCoSone reports the occurred malfunctions in single system components via system alarms.

Speed control

The engine speed control is realised by software functions of the Control Module/Alarm and the speed governor. Engine speed and crankshaft turn angle indication is carried out by means of redundant pick ups at the gear drive.

2025-06-16 - 1.0

Load distribution in multi-engine plants

With electronic speed control, the load distribution is carried out by speed droop, isochronously by load sharing lines or master/slave operation.

Load limit curves

- Start fuel limiter
- Charge air pressure dependent fuel limiter
- Torque limiter
- Jump-rate limiter
- External limiter
- Lambda limiter

Note:
In the case of controllable pitch propeller (CPP) units with combinator mode, the combinator curves must be sent to MAN Energy Solutions for assessment in the design stage. If load control systems of the CPP-supplier are used, the load control curve is to be sent to MAN Energy Solutions in order to check whether it is below the load limit curve of the engine.

Shutdown

The engine shutdown, initiated by safety functions and manual emergency stops, is carried out by redundant fast closing valves of the gas valve unit and independent interrupt of power supply of gas admission valves.

Note:
The engine shutdown may have impact on the function of the plant. These effects can be very diverse depending on the overall design of the plant and must already be considered in early phase of the project planning.

Overspeed protection

The engine speed is monitored in both Control Modules independently. In case of overspeed each Control Module actuates the shutdown device by a separate hardware channel. Overspeed is monitored in Ignition Module too to interrupt igntion.

Control

SaCoSone controls all engine-internal functions as well as external components, for example:

Start/stop sequences

- Requests of lube oil and cooling water pumps
- Monitoring of the prelubrication and post-cooling period
- Monitoring of the acceleration period
- Request of start-up air blower

Control station switch-over

Switch-over from local operation in the engine room to remote control from the engine control room.

External functions

- Electrical lube oil pump
- Electrical driven HT cooling water pump
- Electrical driven LT cooling water pump
- Nozzle cooling water module
- HT preheating unit
- Clutches

The scope of control functions depends on plant configuration and must be coordinated during the project engineering phase.

2025-06-16 - 1.0

Media temperature control

Various media flows must be controlled to ensure trouble-free engine operation.

The temperature controllers are available as software functions inside the Gateway Module of SaCoSone. The temperature controllers are operated by the displays at the operating panels as far as it is necessary. From the Interface Cabinet the relays actuate the control valves.

- The cylinder cooling water (HT) temperature control is equipped with performance-related feed forward control, in order to guarantee the best control accuracy possible (refer also to section Cooling water system, Page 334).
- The low temperature (LT) cooling water temperature control works similarly to the HT cooling water temperature control and can be used if the LT cooling water system is designed as one individual cooling water system per engine.

  In case several engines are operated with a combined LT cooling water system, it is necessary to use an external temperature controller.

  This external controller must be mounted on the engine control room desk and is to be wired to the temperature control valve (refer also to section Cooling water system, Page 334).
- The charge air temperature control is designed similar to the HT cooling water temperature control.

  The cooling water quantity in the LT part of the charge air cooler is regulated by the charge air temperature control valve (refer also to section Cooling water system, Page 334).
- The design of the lube oil temperature control depends on the engine type. It is designed either as a thermostatic valve (waxcartridge type) or as an electric driven control valve with electronic control similar to the HT temperature controller. Refer also to section External lube oil system, Page 312.

Starters

For engine attached pumps and motors the starters are installed in the Auxiliary Cabinet. Starters for external pumps and consumers are not included in the SaCoSone scope of supply in general.

Main bearing- and splash oil temperature monitoring

Main bearing- and splash oil temperature monitoring is available as an optional package.

3.6 Interfaces

Data bus interface (machinery alarm system)

This interface serves for data exchange to ship alarm systems or Integrated Automation Systems (IAS).

The interface is actuated with MODBUS protocol and is available as:

- Ethernet interface (MODBUS over TCP) or as
- Serial interface (MODBUS RTU) RS422/RS485, standard 5 wire with electrical isolation (cable length ≤ 100 m)

2025-06-16 - 1.0

Only if the ethernet interface is used, the transfer of data can be handled with timestamps from SaCoSone.

The status messages, alarms and safety actions, which are generated in the system, can be transferred. All measuring values acquired by SaCoSone are available for transfer.

Alternator control

Hardwired interface, used for example for synchronisation, load indication, etc.

Alternator electric power (active power) signal

To keep, despite natural long-term deterioration effects, engine operation within its optimum range MAN Energy Solutions' engine safety and control system SaCoSone must be provided with an alternator electric power (active power) signal. Interface and signal shall comply with the following requirements:

1. The electric power of the generator (active power) shall be measured with the following components:
   - Current transformer with accuracy class: cl. 0.2 s
   - Voltage transformer with accuracy class: cl. 0.2
   - Measuring transducer with accuracy class: cl. 1
2. Measuring transducer shall provide the current active power as 4 – 20 mA signal and shall provide 0 – 90 % of measured value with response time ≤ 300 ms (EN 60688). The maximum response time of the 4 – 20 mA signal shall not exceed 350 ms.
3. The 4 – 20 mA generator power signal shall be hard-wired with shielded cable. The analogue value of 4 mA shall be approximately equivalent to 0 % generator power, the value of 20 mA shall be approximately equivalent to nominal generator power, plus 10 %. A proper scaling shall be determined during project execution. Furthermore the signal for “Generator CB is closed” from power management system to SaCoSone Interface Cabinet shall be provide.

Power management

Hardwired interface, for remote start/stop, load setting, fuel mode selection, etc.

Propulsion control system

Standardised hardwired interface including all signals for control and safety actions between SaCoSone and the propulsion control system.

Others

In addition, interfaces to auxiliary systems are available, such as:

- Nozzle cooling water module (for DF engines)
- HT preheating unit
- Electric driven pumps for lube oil, HT and LT cooling water
- Clutches
- Gearbox

2025-06-16 - 1.0

- Propulsion control system

On request additional hard wired interfaces can be provided for special applications.

Cables – Scope of supply

The bus cables between engine and interface are scope of the MAN Energy Solutions supply.

The control cables and power cables are not included in the scope of the MAN Energy Solutions supply. This cabling has to be carried out by the customer.

3.7 Data Logging

Details on data logging, such as:

- Description of what data is logged
- Description of access rights
- Analysis of data
- Description of which tools are required

etc., see document "Data Logging Cabinet SaCoS Engine Vault PC – Operating Instructions".

3.8 Technical data

Cabinet

Design

- Floor-standing cabinets with plinth and fan/air condition
- Cable entries: From below, through cabinet base
- Accessible by front door(s), doors with locks
- Opening angle: 90°
- Standard colour: Light grey (RAL7035)
- Ingress protection: IP54

Cabinet	Dimensions (mm) including base			Approx. weight (kg)
	Width	Height	Depth	
Interface Cabinet, equipped with fan	1,200	2,100	400	300
Interface Cabinet, equipped with air condition	1,550	2,100	400	360
Auxiliary Cabinet, equipped with fan	800	2,100	400	300
Auxiliary Cabinet, equipped with air condition	1,150	2,100	400	360
Driver Cabinet, equipped with fan	600	2,100	1,550	180
Driver Cabinet, equipped with air condition	950	2,100	1,550	240
Data Logging Cabinet	600	800	400	60

2025-06-16 - 1.0

Cabinet	Dimensions (mm) including base			Approx. weight (kg)
	Width	Height	Depth	
Remote Operating Panel (optional)	480	300	135	15

Table 136: Dimensions and weights of cabinets

Door opening area of cabinets

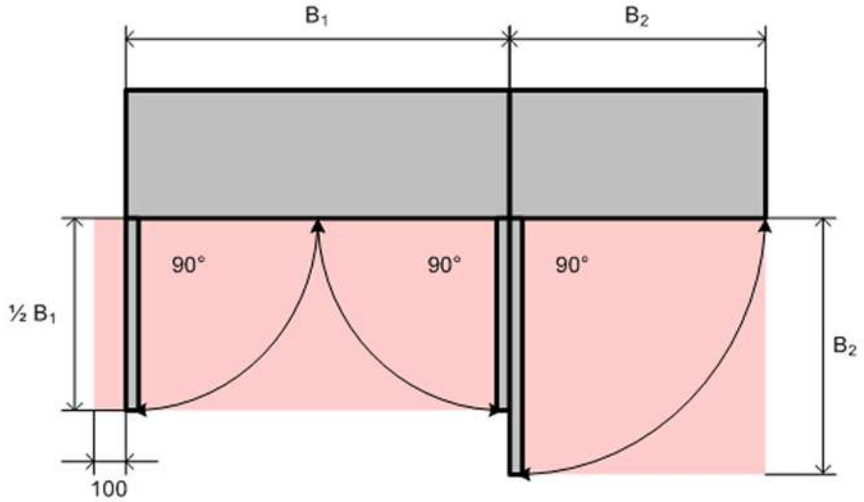

B_1 Width of cabinet 1 B_2 Width of cabinet 2

Figure 107: Exemplary arrangement of control cabinets with door opening areas (top view)

Remote Operating Panel (optional)

Design

- Panel for control desk installation with 3 m cable to terminal bar for installation inside control desk
- Front colour: White aluminium (RAL9006)
- Weight: 15 kg
- Ingress of protection: IP23
- Dimensions: 370 x 480 x 150 mm[1)]

  [1)] width x height x depth (including base)

Environmental conditions

Components on engine and wall-mounted cabinets

- Ambient air temperature: +5 °C to +55 °C (Exception: an ambient air temperature of +5 °C to +45 °C applies to the Data Logging Cabinet, SCR Cabinet, Gas Valve Unit Cabinet and Fuel Valve Train Cabinet)
- Relative humidity: < 96 %
- Vibrations: < 0.7 g

Floor-standing cabinets

- Ambient air temperature:
  - 0 °C to +45 °C: Floor-standing cabinets will be equipped with a fan
  - Over +45 °C: Floor-standing cabinets will be mandatory equipped with an air condition
- Relative humidity: < 96 %
- Vibrations: < 0.7 g

2025-06-16 - 1.0

3.9 Installation requirements

Location

The cabinets are designed for installation in engine rooms or engine control rooms.

Wall-mounted cabinets and floor-standing cabinets

The cabinets must be installed at a location suitable for service inspection.

Do not install the cabinets close to heat-generating devices.

Floor-standing cabinets

In case of installation at walls, the distance between the floor-standing cabinets and the wall has to be at least 100 mm to allow air convection.

The foundation at the installation site must be solid enough to withstand the weight of the floor-standing cabinets.

All floor-standing cabinets have to be fixed to the floor. Also they have to be secured against tipping over (for example, by attaching the roof to the wall) with suitable mounting support, proven to withstand at minimum the maximum allowed inclination, see accordingly section Engine inclination, Page 43.

Note:
If the restrictions for ambient temperature cannot be kept, the floor-standing cabinet must be ordered with an optional air condition system.

Ambient air conditions

For restrictions of ambient conditions, refer to the section Technical data, Page 242.

Cabling

The interconnection cables between the engine and the cabinets have to be installed according to the rules of electromagnetic compatibility. Control cables and power cables have to be routed in separate cable ducts.

The cables for the connection of sensors and actuators which are not mounted on the engine are not included in the scope of MAN Energy Solutions supply. Shielded cables have to be used for the cabling of sensors. For electrical noise protection, an electric ground connection must be made from the cabinets to the ship's hull.

All cabling between the cabinets and the controlled device is scope of customer supply.

The cabinets are equipped with spring loaded terminal clamps. All wiring to external systems should be carried out without conductor sleeves.

The redundant CAN cables are MAN Energy Solutions scope of supply. If the customer provides these cables, the cable must have a characteristic impedance of 120 Ω.

Maximum cable length

Connection	Max. cable length
Cables between engine and cabinets	≤ 45 m
MODBUS cable between Interface Cabinet and superordinated automation system (only for ethernet)	≤ 100 m

2025-06-16 - 1.0

Connection	Max. cable length
Cable between Interface Cabinet and Remote Operating Panel	≤ 100 m

Table 137: Maximum cable length

Installation works

During the installation period the customer has to protect the cabinets against water, dust and fire. It is not permissible to do any welding near the cabinets. The cabinets have to be fixed to the floor by screws.

If it is inevitable to do welding near the cabinets, the cabinets and panels have to be protected against heat, electric current and electromagnetic influences. To guarantee protection against current, all of the cabling must be disconnected from the affected components.

The installation of additional components inside the cabinets is only permissible after approval by the responsible project manager of MAN Energy Solutions.

Installation of sensor 1TE6000 „Ambient air temp”

The sensor 1TE6000 “Ambient air temp” (double Pt1000) measures the temperature of the (outdoor) ambient air. The temperature of the ambient air will typically differ from that in the engine room.

The sensor may be installed in the ventilation duct of the fan blowing the (outdoor) ambient air into the engine room. Ensure to keep the sensor away from the influence of heat sources or radiation. The image below shows two options of installing the sensors correctly:

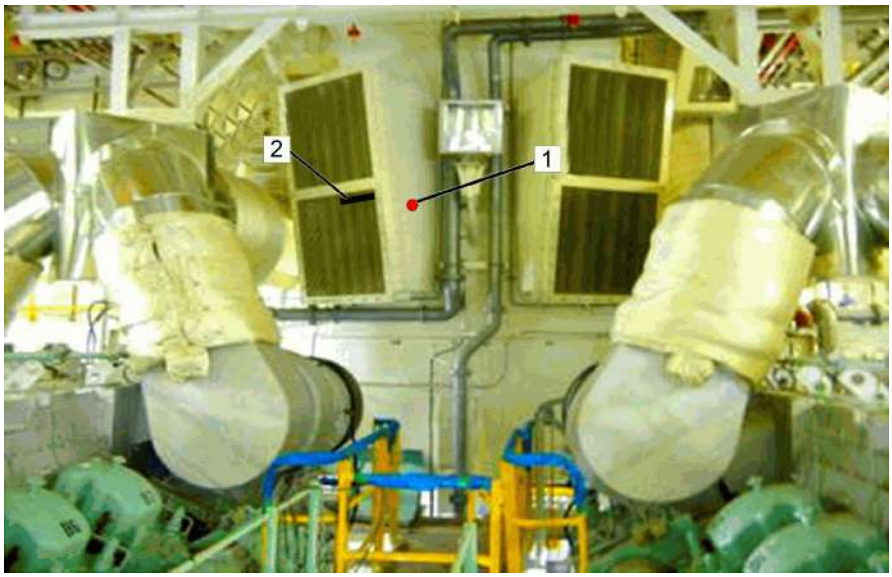

1 Hole drilled into the duct of the engine room ventilation. Sensor measuring the temperature of the airstream.

2 Self-designed holder in front of the duct.

Figure 108: Possible locations for installing the sensor 1TE6000

Note:
The sensor 1TE6100 “intake air temp” is not suitable for this purpose.

2025-06-16 - 1.0

3.10 Engine-located measuring and control devices

Exemplary list for project planning

No.	Measuring point	Description	Function	Measuring Range	Location	Connected to	Depending on option
Speed pickups							
1	1SE1004A/B[1)]	speed pickup turbocharger speed	TC speed monitoring	-	turbocharger	Control Module/ Safety	-
2	1SE1005	speed pickup engine speed	engine speed & camshaft position detection	0–900 rpm/ 0–1,800 Hz	camshaft drive wheel	Control Module/ Alarm	-
3	2SE1005	speed pickup engine speed	engine speed & camshaft position detection	0–900 rpm/ 0–1,800 Hz	camshaft drive wheel	Control Module/ Safety	-
4	1SV1010	actuator engine fuel admission	speed and load governing	-	engine	Auxiliary Cabinet	-
Start and stop of engine							
5	1SSV1011	solenoid valve engine start	actuated during engine start and slowturn	-	engine	Control Module/ Alarm	-
6	1PS1011	pressure switch start air pressure after start valve	feedback start valve activated	-	engine	Control Module/ Alarm	-
7	1HZ1012	push button local emergency stop	emergency stop from local control station	-	Local Operating Panel	Gateway Module	-
8	1SZV1012	solenoid valve engine shutdown	manual and auto-emergency shutdown	-	engine	Control Module/ Safety	-
9	1PS1012	pressure switch emergency stop air	feedback emergency stop, start-blocking active	0–10 bar	emergency stop air pipe on engine	Control Module/ Safety	-
Fuel admission							

2025-06-16 - 1.0

No.	Measuring point	Description	Function	Measuring Range	Location	Connected to	Depending on option
10	1GT1022	position sensor fuel admission	inductive measurement of fuel rack position	0–30° rotation/ 0–110% fuel adm.	engine	Control Module/ Alarm	-
Variable Injection Timing							
11	3GV1028A	solenoid valve VIT cylinder 1 row A	3/2-way valve M307 for VIT adjustment	-	engine	Control Module/ Alarm	-
12	4GV1028A	solenoid valve VIT cylinder 2 row A	3/2-way valve M307 for VIT adjustment	-	engine	Control Module/ Alarm	-
13	3GOS1028A	proximity switch VIT safe position row A	VIT position feedback	-	engine	Control Module/ Alarm	-
14	3GV1028B	solenoid valve VIT cylinder 1 row B	3/2-way valve M307 for VIT adjustment	-	engine	Control Module/ Alarm	-
15	4GV1028B	solenoid valve VIT cylinder 2 row B	3/2-way valve M307 for VIT adjustment	-	engine	Control Module/ Alarm	-
16	3GOS1028B	proximity switch VIT safe position row B	VIT position feedback	-	engine	Control Module/ Alarm	-
Charge air bypass							
17	1XSV1030	solenoid valve charge air bypass flap	blow by while part-load or low speed	-	engine	Control Module/ Alarm	charge air bypass
Charge air blow-off							
18	1XSV1031A/ B[1)]	solenoid valve charge air blow off flap A/B	charge air blow off at low suction air temperature	-	engine	Control Module/ Alarm	charge air blow off
Main bearings (optional)							
19	xTE1064-1/2	double temp sensors, main bearings	indication, alarm, engine protection	0–120 °C	engine	Control Modules	main bearing temp monitoring
Turning gear							

2025-06-16 - 1.0

No.	Measuring point	Description	Function	Measuring Range	Location	Connected to	Depending on option
20	1GOS1070	limit switch turning gear engaged	indication and start blocking	-	engine	Control Module/ Alarm	-
Slow turn							
21	1SSV1075	solenoid valve slow turn	slow turn	-	engine	Control Module/ Alarm	-
22	2SSV1075	solenoid valve slow turn	start air blocking during slow turn	-	engine	Control Module/ Alarm	-
Jet assist							
23	1SSV1080	solenoid valve for jet assist	turbocharger acceleration by jet assist	-	engine	Control Module/ Alarm	jet assist
Lube oil system							
24	1PT2170	pressure transmitter, lube oil pressure engine inlet	alarm at low lube oil pressure	0–10 bar	engine	Control Module/ Alarm	-
25	2PT2170	pressure transmitter, lube oil pressure engine inlet	auto shutdown at low pressure	0–10 bar	Local Operating Panel	Control Module/ Safety	-
26	1TE2170-1/2	double temp sensor, lube oil temp engine inlet	alarm at high temp	0–120 °C	engine	Control Modules	-
27	1PT2570A/B[1)]	pressure transmitter, lube oil pressure turbocharger inlet	alarm at low lube oil pressure	0–6 bar	engine	Control Module/ Alarm	-
28	2PT2570A/B[1)]	pressure transmitter, lube oil pressure turbocharger inlet	auto shutdown at low lube oil pressure	0–6 bar	engine	Control Module/ Safety	-
29	1TE2580A/B[1)]	double temp sensor, lube oil temp turbocharger drain	alarm at high temp	0–120 °C	engine	Control Modules	-
Oil mist detection							
30	1QTIA2870	oilmist detector, oilmist concentration in crankcase	oilmist supervision	-	engine	-	oil mist detection
31	1ES2870	binary contact oil-mist detector system ready	integrated in 1QTIA2870	-	engine	Control Module/ Safety	oil mist detection

2025-06-16 - 1.0

No.	Measuring point	Description	Function	Measuring Range	Location	Connected to	Depending on option
32	1QS2870	opacity switch oil-mist in crankcase	integrated in 1QTIA2870	-	engine	Control Module/ Safety	oil mist detection
33	2QS2870	opacity switch oil-mist in crankcase	integrated in 1QTIA2870	-	engine	Control Module/ Safety	oil mist detection
Splash oil (optional)							
34	xTE2880-1/2	double temp sensors, splash oil temp rod bearings	splash oil supervision	0–120 °C	engine	Control Modules	-
Cooling water systems							
35	1TE3168	double temp sensor HT water temp charge air cooler inlet	for EDS visualisation and control of preheater valve	0–120 °C	engine	Control Module/ Alarm	-
36	1PT3170	pressure transmitter, HT cooling water pressure engine inlet	alarm at low pressure	0–6 bar	engine	Control Module/ Alarm	-
37	2PT3170	pressure transmitter, HT cooling water pressure engine inlet	detection of low cooling water pressure	0–6 bar	engine	Control Module/ Alarm	-
38	1TE3170-1/2	double temp sensor, HTCW temp engine inlet	alarm, indication	0–120 °C	engine	Control Modules	-
39	1TE3180-1/2	temp sensor, HT water temp engine outlet	-	0–120 °C	engine	Control Modules	-
40	1PT3470	pressure transmitter, nozzle cooling water pressure engine inlet	alarm at low cooling water pressure	0–10 bar	engine	Control Module/ Alarm	-
41	2PT3470	pressure transmitter, nozzle cooling water pressure engine inlet	alarm at low cooling water pressure	0–10 bar	engine	Control Module/ Safety	-
42	1TE3470-1/2	double temp sensor, nozzle cooling water temp engine inlet	alarm at high cooling water temp	0–120 °C	engine	Control Modules	-
43	1PT4170	pressure transmitter, LT water pressure charge air cooler inlet	alarm at low cooling water pressure	0–6 bar	engine	Control Module/ Alarm	-

2025-06-16 - 1.0

No.	Measuring point	Description	Function	Measuring Range	Location	Connected to	Depending on option
44	2PT4170	pressure transmitter, LT water pressure charge air cooler inlet	alarm at low cooling water pressure	0–6 bar	engine	Control Unit	-
45	1TE4170-1/2	double temp sensor, LT water temp charge air cooler inlet	alarm, indication	0–120 °C	LT pipe charge air cooler inlet	Control Modules	-
Fuel system							
46	1PT5070	pressure transmitter, fuel pressure engine inlet	remote indication and alarm	0–16 bar	engine	Control Module/ Alarm	-
47	2PT5070	pressure transmitter, fuel pressure engine inlet	remote indication and alarm	0–16 bar	engine	Control Module/ Safety	-
48	1TE5070-1/2	double temp sensor, fuel temp engine inlet	alarm at high temp in MDO-mode and for EDS use	0–200 °C	engine	Control Modules	-
Charge air system							
49	1PT6100	pressure transmitter, intake air pressure	for EDS visualisation	–20 – +20 mbar	intake air duct after filter	Control Module/ Alarm	-
50	1TE6100	double temp sensor, intake air temp	temp input for charge air blow-off and EDS visualisation	0–120 °C	intake air duct after filter	Control Module/ Alarm	-
51	1TE6170A/ B-1/2[1)]	double temp sensor, charge air temp charge air cooler A/B inlet	for EDS visualisation	0–300 °C	engine	Control Modules	-
52	1PT6180A/B[1)]	pressure transmitter, charge air pressure before cylinders row A/B	engine control	0–6 bar	engine	Control Module/ Alarm	-
53	2PT6180A/B[1)]	pressure transmitter, charge air pressure before cylinders row A/B	-	0–6 bar	engine	Control Module/ Safety	-
54	1TE6180A/ B-1/2[1)]	double temp sensor, charge air temp after charge air cooler A/B	alarm at high temp	0–120 °C	engine	Control Modules	-
Exhaust gas system							

2025-06-16 - 1.0

No.	Measuring point	Description	Function	Measuring Range	Location	Connected to	Depending on option
55	xTE6570A/ B-1/2[1]	double thermo-couples, exhaust gas temp cylinders A/B	indication, alarm, engine protection	0–800 °C	engine	Control Modules	-
56	1TE6575A/ B-1/2[1]	double thermo-couples, exhaust gas temp before turbocharger A/B	indication, alarm, engine protection	0–800 °C	engine	Control Modules	-
57	1TE6580A/ B-1/2[1]	double thermo-couples, exhaust gas temp after turbocharger A/B	indication	0–800 °C	engine	Control Modules	-
Control air, start air, stop air							
58	1PT7170	pressure transmitter, starting air pressure	engine control, remote indication	0–40 bar	engine	Control Module/ Alarm	-
59	2PT7170	pressure transmitter, starting air pressure	engine control, remote indication	0–40 bar	engine	Control Module/ Safety	-
60	1PT7180	pressure transmitter, emergency stop air pressure	alarm at low air pressure	0–40 bar	engine	Control Module/ Alarm	-
61	2PT7180	pressure transmitter, emergency stop air pressure	alarm at low air pressure	0–40 bar	engine	Control Module/ Safety	-
62	1PT7400	pressure transmitter, control air pressure	remote indication	0–10 bar	engine	Control Module/ Alarm	-
63	2PT7400	pressure transmitter, control air pressure	remote indication	0–10 bar	engine	Control Module/ Safety	-

[1] A-sensors: All engines; B-sensors: V engines only.

Table 138: List of engine-located measuring and control devices

2025-06-16 - 1.0

This page is intentionally left blank

2025-06-16 - 1.0

4 Specification for engine supplies

4.1 Explanatory notes for operating supplies – Diesel engines

4.1.1 Lube oil

Selection of the lube oil must be in accordance with the relevant sections.

The lube oil must always match the worst fuel oil quality.

A base number (BN) that is too low is critical due to the risk of corrosion.

A base number that is too high, could lead to deposits/sedimentation.

4.1.2 Fuel

The quality of the fuel specified in the relevant sections must be ensured.

Engine operation with DM-grade fuel according to ISO 8217, viscosity ≥ 2 cSt at 40°C

A) Short-term operation, max. 72 hours

Engines that are normally operated with residual fuel, can also be operated with DM-grade fuel for short periods.

Boundary conditions:

- DM-grade fuel in accordance with stated specifications and a viscosity of ≥ 2 cSt at 40°C.
- MGO-operation maximum 72 hours within a two-week period (cumulative with distribution as required).
- Fuel oil cooler switched on and fuel oil temperature before engine ≤ 45°C. In general, the minimum viscosity before engine of 1.9 cSt must not be undershoot!

B) Long-term (> 72 h) or continuous operation

For long-term (> 72 h) or continuous operation with DM-grade fuel special engine- and plant-related planning prerequisites must be set and special actions are necessary during operation.

Following features are required on engine side:

- Valve seat lubrication with possibility to be turned off and on manually.

Following features are required on plant side:

- Layout of fuel system to be adapted for low-viscosity fuel (capacity and design of fuel supply and booster pump).
- Cooler layout in fuel system for a fuel oil temperature before engine of ≤ 45 °C (min. permissible viscosity before engine 1.9 cSt).
- Nozzle cooling system with possibility to be turned off and on during engine operation.

Boundary conditions for operation:

- Fuel in accordance with DMA, DFA and a viscosity of ≥ 2 cSt at 40°C.
- Fuel oil cooler activated and fuel oil temperature before engine ≤ 45°C. In general the minimum viscosity before engine of 1.9 cSt must not be undershoot!
- Valve seat lubrication turned on.

2025-06-16 - 1.0

- Nozzle cooling system switched off.

Continuous operation with DMA, DFA:

- Lube oil for diesel operation (BN10-BN16) has to be used.

Operation with residual fuel (HFO) of a sulphur content of < 1.5%

Previous experience with stationary engines using residual fuel (HFO) of a low sulphur content does not show any restriction in the utilisation of these fuels, provided that the combustion properties are not affected negatively.

This may well change if in the future new methods are developed to produce low sulphur-containing residual fuels.

If it is intended to run continuously with low sulphur-containing residual fuel, lube oil with a low BN (BN30) has to be used. This is required, in spite of experiences that engines have been proven to be very robust with regard to the continuous usage of the standard lube oil (BN40) for this purpose.

Instruction for minimum admissible fuel temperature

- In general the minimum viscosity before engine of 1.9 cSt must not be undershoot.
- The fuel specific characteristic values “pour point” and “cold filter plugging point” have to be observed to ensure pumpability respectively filterability of the fuel oil.
- Fuel temperatures of approximately minus 10 °C and less have to be avoided, due to temporarily embrittlement of seals used in the engines fuel oil system and as a result their possibly loss of function.

Operation with FAME (Fatty acid methyl ester) additives 7% to 100% or with operation with synthetic fuels (DIN EN 15940)

Note the specification and special remarks in paragraph Synthetic fuels (DIN EN 15940) and paragraphs FAME (fatty acid methyl ester) additive of 0.5 to 7%, FAME (fatty acid methyl ester) additive up to max. 7% and FAME (fatty acid methyl ester) additive up to max. 100%.

4.1.3 Nozzle cooling

The quality of the engine cooling water required in relevant section has to be ensured.

Nozzle cooling system activation	
Kind of fuel	**Activated**
MGO (DMA, DFA)	No, see section Fuel, Page 253
MDO (DMB, DFB)	No
HFO	Yes

Table 139: Nozzle cooling system activation

4.1.4 Intake air

The quality of the intake air as stated in the relevant sections has to be ensured.

2025-06-16 - 1.0

4.1.5 Urea

The quality of the urea as stated in section Specification of urea solution, Page 290.

4.1.6 Compressed air – SCR catalyst

The compressed air must be free of oil and other contaminations. The quality of the compressed air as stated in section Specification of compressed air, Page 289.

4.2 Specification of lubricating oil (SAE 40) for operation with DMA/DMB, DFA, DFB

General

The specific output achieved by modern diesel engines combined with the use of fuels that satisfy the quality requirements more and more frequently increase the demands on the performance of the lubricating oil which must therefore be carefully selected.

Lubricating oils contain additives that, amongst other things, ensure dirt absorption capability, cleaning of the engine and the neutralisation of acidic combustion products.

Only lubricating oils that have been approved by MAN Energy Solutions may be used. These are listed under https://corporate.man-es.com/lubrication.

Specifications

Doped lube oils (HD oils)

The base oil which has been mixed with additives (doped lube oil) must have the following properties:

Neutralization capacity

The neutralization capacity (DIN ISO 3771) must be so high that the acidic products produced during combustion are neutralized. The reaction time of the additives must be matched to the process in the combustion chamber.

Additional requirements

Fresh oil must not contain water or other contaminants.

Lubricating oil selection

Engine	SAE class
16/24, 21/31, 27/38, 23/30, 28/32, 32/40, 32/44CR, 35/44DF, 48/60CR, 49/60, 49/60DF, 51/60DF, 51/60R, 51/60R-DF-M	40

Table 140: Viscosity (SAE class) of lubricating oils

Oil quality

Exclusively lube oils approved by MAN Energy Solutions must be used. Lube oils according to the military specification O-278 can be used if they are included in the current list of approved lube oils under https://corporate.man-es.com/lubrication.

The operating conditions of the engine and the quality of the fuel determine the additive fractions the lube oil should contain. If marine diesel oil with a high sulfur content of 1.0 up to 1.5 weight % is used, a base number (BN) of approx. 20 should be selected. However, the operating results that ensure the most efficient engine operation ultimately determine the additive content.

2025-06-16 - 1.0

Oil for mechanical/hydraulic speed governors

Multigrade oil 5W40 should ideally be used in mechanical-hydraulic controllers with a separate oil sump, unless the technical documentation for the speed governor specifies otherwise. If this oil is not available when filling, 15W40 oil may be used instead in exceptional cases. In this case, it makes no difference whether synthetic or mineral-based oils are used.

The military specification applied for these oils is NATO O-236.

Experience with the drive engine L27/38 has shown that the operating temperature of the Woodward controller UG10MAS and corresponding actuator for UG723+ can reach temperatures higher than 93 °C. In these cases, we recommend using synthetic oil such as Castrol Alphasyn HG150.

Lubricating oil additives

The use of other additives in conjunction with the lubricating oil or the mixing of different brands (oils from different manufacturers and different brands from the same manufacturer) is not permitted, as this can affect the performance of existing additives, which have been carefully matched to each other and have also been specially adapted to the base oil.

Selection of lubricating oils/ warranty

Most oil manufacturers have close and constant contacts with engine manufacturers and can therefore specify which oil from their own product line is approved by the engine manufacturer for the application. Regardless of this information, lubricating oil manufacturers are always liable for the quality and properties of their products. If you have any questions, we will be happy to provide you with further information.

The list of the currently approved lubricating oils is available at https://corporate.man-es.com/lubrication.

Oil during operation

There are no prescribed oil change intervals for MAN Energy Solutions medium speed engines. The oil properties must be analysed monthly. The oil must therefore be suitable for the intended purpose and meet the defined limit values as per the table. If this is the case, the oil can continue to be used. See table Limit values for used lube oil, Page 256.

The quality can only be maintained if it is purified via a separator or an otherwise suitable device.

Tests

A monthly analysis of lube oil samples is mandatory for safe engine operation. We can analyse samples for customers in the MAN Energy Solutions PrimeServLab.

Note:
If operating fluids are improperly handled, this can pose a danger to health, safety and the environment. The relevant safety information by the supplier of operating fluids must be observed.

Note:
MAN Energy Solutions does not assume liability for problems that occur when using these oils.

	Limit value	Procedure
Viscosity at 40 °C	110–220 mm²/s	ASTM D7042, ASTM D445, DIN EN 16896 or ISO 3104
Base number (BN)	at least 50 % of fresh oil	ISO 3771
Flash point (PM)	at least 185 °C	ISO 2719
Water content	max. 0.2 % (max. 0.5 % for brief periods)	DIN 51777 or ASTM D6304

2025-06-16 - 1.0

	Limit value	Procedure
n-heptane insoluble	max. 1.5 %	DIN 51592 or IP 316
Metal content	dependent on engine type and operating conditions	–
Guide value only Fe Cr Cu Pb Sn Al	 max. 50 ppm max. 10 ppm max. 15 ppm max. 20 ppm max. 10 ppm max. 20 ppm	ASTM D5185 or DIN 51399-1

Table 141: Limit values for used lube oil

4.3 Specification of lubricating oil (SAE 40) for residual fuel operation (HFO)

General

The specific output achieved by modern diesel engines combined with the use of fuels that satisfy the quality requirements more and more frequently increase the demands on the performance of the lubricating oil which must therefore be carefully selected.

Medium alkalinity lubricating oils have a proven track record as lubricants for the moving parts and turbocharger cylinder and for cooling the pistons. Lubricating oils of medium alkalinity contain additives that, in addition to other properties, ensure a higher neutralization reserve than with fully compounded engine oils (HD oils).

International specifications do not exist for medium alkalinity lubricating oils. A test operation is therefore necessary for a corresponding long period in accordance with the manufacturer's instructions.

Only lubricating oils that have been approved by MAN Energy Solutions may be used.

The list of the currently approved lubricating oils is available at https://corporate.man-es.com/lubrication.

Specifications

Additional requirements

Fresh oil must not contain water or other contaminants.

Lube oil selection

Engine	SAE class
16/24, 21/31, 27/38, 23/30, 28/32, 32/40, 32/44CR, 35/44DF, 48/60CR, 49/60, 49/60DF, 51/60DF, 51/60R, 51/60R-DF-M	40

Table 142: Viscosity (SAE class) of lubricating oils

Neutralisation properties (BN)

At the present level of knowledge, an interrelation between the expected operating conditions and the BN number can be established. However, the operating results are still the overriding factor in determining which BN number provides the most efficient engine operation.

2025-06-16 - 1.0

Table Base number to be used for various operating conditions, Page 258 indicates the relationship between the anticipated operating conditions and the BN number.

Approx. BN of fresh oil (mg KOH/g oil)	Engines/operating conditions
20	Marine diesel oil (MDO) of a lower quality and with a high sulphur content or residual fuel with a sulphur content of less than 0.50%
30	Generally 16/24, 21/31, 23/30, 28/32 under normal operating conditions. For engines 27/38, 32/40, 32/44CR, 35/44DF, 48/60CR, 49/60, 49/60DF (marine application) and 51/60DF operating with 100% HFO with a sulphur content < 1.5% only.
40	Under unfavourable operating conditions and where the corresponding requirements for the oil service life and cleaning capacity exist, 16/24, 21/31, 23/30 and 28/32. In general 27/38, 32/40, 32/44CR, 35/44DF, 48/60CR, 49/60, 49/60DF (marine application) and 51/60DF for operation with residual fuel, provided the sulphur content is over 1.5%.
50	32/40, 32/44CR and 48/60CR, if the oil service life or engine cleanliness is insufficient with a BN number of 40 (high sulphur content of fuel, extremely low lubricating oil consumption).

Table 143: Base number to be used for various operating conditions

Operation with low-sulphur fuel

To comply with the emissions regulations, the sulphur content of fuels used nowadays varies. Fuels with low-sulphur content must be used in environmentally-sensitive areas (e.g. SECA). Fuels with higher sulphur content may be used outside SECA zones. In this case, the BN number of the lube oil selected must satisfy the requirements for operation using fuel with high-sulphur content. A lube oil with low BN number may only be selected if fuel with a low sulphur content is used exclusively during operation.
However, the practical results demonstrate that the most efficient engine operation is the factor ultimately determining the permitted additive content.

Oil for mechanical/hydraulic speed governors

Multigrade oil 5W40 should ideally be used in mechanical-hydraulic controllers with a separate oil sump, unless the technical documentation for the speed governor specifies otherwise. If this oil is not available when filling, 15W40 oil may be used instead in exceptional cases. In this case, it makes no difference whether synthetic or mineral-based oils are used.

The military specification applied for these oils is NATO O-236.

Experience with the drive engine L27/38 has shown that the operating temperature of the Woodward controller UG10MAS and corresponding actuator for UG723+ can reach temperatures higher than 93 °C. In these cases, we recommend using synthetic oil such as Castrol Alphasyn HG150.

Hydraulic oil for engines with VVT controller

Hydraulic oil HLP 46 (DIN 51502) or ISO VG 46 (DIN 51519) must be used according to the specification DIN 51524-2. Mixing hydraulic oils from different manufacturers is not permitted.

Lubricating oil additives

The use of other additives in conjunction with the lubricating oil or the mixing of different brands (oils from different manufacturers and different brands from the same manufacturer) is not permitted, as this can affect the performance of existing additives, which have been carefully matched to each other and have also been specially adapted to the base oil.

Oil during operation

There are no prescribed oil change intervals for MAN Energy Solutions medium speed engines. The oil properties must be analysed monthly. The oil must therefore be suitable for the intended purpose and meet the defined limit values as per the table. If this is the case, the oil can continue to be used. See table Limit values for used lube oil, Page 259.

2025-06-16 - 1.0

The quality can only be maintained if it is purified via a separator or an otherwise suitable device.

Temporary operation with distillate fuel

Due to current and future emissions regulations, the use of residual fuel in designated areas is not possible. Instead of this, a low-sulphur diesel fuel must be used in these areas.

If the duration of the operation with low-sulphur diesel fuel is limited to less than 1,000 h, a lubricating oil that is intended for residual fuel operation (BN 30–55 mg KOH/g) can continue to be used during this time.

If the temporary operation with low-sulphur diesel fuel lasts longer than 1,000 h and is then operated with residual fuel again after that, a lubricating oil with a BN of 20 must be used. If the BN 20 lubricating oil is from the same brand as the lubricating oil used in the HFO operation with high BN (40 or 50), no oil change is required for the switch. It is sufficient to use BN 20 oil to top up the used lubricating oil.

If you want to use residual fuel again, you must switch back in good time to a lubricating oil with a higher BN (30–55). If the lubricating oil with the higher BN is from the same brand as the BN 20, the switch can also be made without changing oil. To do this, approx. 2 weeks before operating again with residual fuel, use the lubricating oil with the higher BN (30–55) to top up the consumed lubricating oil.

	Limit value	Procedure
Viscosity at 40 °C	110–220 mm²/s	ASTM D7042, ASTM D445, DIN EN 16896 or ISO 3104
Base number (BN)	at least 50 % of fresh oil	ISO 3771
Flash point (PM)	at least 185 °C	ISO 2719
Water content	max. 0.2 % (max. 0.5 % for brief periods)	DIN 51777 or ASTM D6304
n-heptane insoluble	max. 1.5 %	DIN 51592 or IP 316
Metal content	dependent on engine type and operating conditions	–
Guide value only Fe Cr Cu Pb Sn Al	 max. 50 ppm max. 10 ppm max. 15 ppm max. 20 ppm max. 10 ppm max. 20 ppm	ASTM D5185 or DIN 51399-1

Table 144: Limit values for used lube oil

Tests

A monthly analysis of lube oil samples is mandatory for safe engine operation. We can analyse samples for customers in the MAN Energy Solutions PrimeServLab.

Note:
MAN Energy Solutions does not assume liability for problems that occur when using these oils.

2025-06-16 - 1.0

4.4 Diesel fuel (DMA, DFA) specification

General information

Diesel fuel is a middle distillate refined from crude oil. It is also referred to as: gas oil, marine gas oil (MGO), DMA, DFA, diesel oil. It should not contain any residue from crude oil refining.

Selection of suitable fuel

Unsuitable or adulterated fuel generally results in a shortening of the service life of engine parts/components, damage to these and to catastrophic engine failure. It is therefore important to select the fuel with care in terms of its suitability for the engine and the intended application. Through its combustion, the fuel influences the emissions behaviour of the engine.

Specifications and approvals (DMA)

The fuel quality varies regionally and depends on climatic conditions. All requirements from ISO 8217:2024 apply

The following values must be maintained at the engine inlet:

Property	Unit		Limit value[1)]	Standard[2)]
Appearance	-	-	Clear, bright and free from visible contamination	visually
Kinematic viscosity at 40° C[3)]	mm^2/s	Max. Min.	6.0 2.0	ISO 3104, ASTM D7042, ASTM D445, DIN EN 16896
Density at 15°C	kg/m^3	Max. Min.	890.0 820.0	ISO 3675, ISO 12185
Water content	% (m/m)	Max.	0.02	DIN 51777, DIN EN 12937, ASTM D6304
Cetane number		Min.	40	EN ISO 5165, IP541, EN 15195, EN 16715, EN 17155
Sulphur content[4)]	% (m/m)	Max.	1.0	ISO 8754, ISO 14596, ASTM D4294, DIN 51400-10
Flashpoint[5)]	°C	Min.	60.0	ISO 2719
Acid number	mg KOH/g	Max.	0.5	ASTM D664
Carbon residue[6)]	% (m/m)	Max.	0.30	ISO 10370
Ash content	% (m/m)	Max.	0.010	ISO 6245
Lubricity (WSD)	µm	Max.	520	ISO 12156-1, ASTM D6079
Corrosion effect on copper	Class	Max.	1	EN ISO 2160
Hydrogen sulphide	mg/kg	Max.	2.0	IP 570
FAME[7)]-content	% (V/V)	Max.	0.5	ASTM D7963, IP 579, DIN EN 14078
Oxidation stability	g/m^3	Min.	25	EN ISO 12205
Sediment content[8)]	% (m/m)	Max.	0.01	ISO 10307-1

2025-06-16 - 1.0

Property	Unit		Limit value[1)]	Standard[2)]
CFPP	°C		10°C below the lowest temperature in the fuel system	DIN EN 116, IP 309, IP 612
Pour Point[9)] winter grade	°C	Max.	-6	ISO 3016
Pour Point[9)] summer grade	°C	Max.	0	ISO 3016
Na, K, Ca, P, Cu, Zn, Si	mg/kg	Max.	free from	DIN EN 16476

Table 145: Requirements for diesel fuel (DMA)

Remarks:

[1)] The fuel must be suitable for the intended application. It must not contain any substance in a concentration that causes additional air pollution, is harmful for personnel, jeopardises ship safety and/or has an adverse effect on machine performance. The fuel must be free from non-ferrous metals according to DIN EN 16476. The fuel must not contain any waste oil.

[2)] Always refer to the currently applicable edition.

[3)] Specific requirements of the injection system must be taken into account

[4)] Independent of the maximum permissible sulphur content, local laws and regulations must be adhered to

[5)] Additional requirements (e.g. SOLAS) must be observed. Applicable laws must be adhered to.

[6)] Determined at 10 % distillation residue

[7)] The FAME must either be in accordance with EN 14214 or with ASTM D6751 as well as with increased oxidation stability of at least 8 hours (EN 15751). For information on using a fuel with more than 0.5 % FAME, see paragraph Diesel fuel (DMA, DFA) specification, Page 263

[8)] If the sample is not clear and bright, complete sedimentation through hot filtration and the determination of water content is required

[9)] 10°C below the lowest temperature in the fuel system

The following fuels are approved for use if the fuel complies with table Requirements for diesel fuel (DMA), Page 260:

- Classes ISO F-DMA & DMZ according to ISO 8217:2024
- Diesel fuel as per EN 590:2022 with additional requirement regarding flashpoint > 60 °C in SOLAS regulated areas
- Diesel fuel no. 2-D as per ASTM D975-21 with additional requirement regarding flashpoint > 60 °C in SOLAS regulated areas

Please submit enquiries to MAN Energy Solutions for all fuels which do not meet the abovementioned standards.

Viscosity

In order to ensure sufficient lubrication, a minimum level of viscosity must be ensured at the fuel injection pump. The specified maximum temperature required to maintain a viscosity of more than 1.9 mm^2/s upstream of the fuel injection pump depends on the fuel viscosity. The temperature of the fuel up-

2025-06-16 - 1.0

stream of the fuel injection pump must not exceed 45 °C in any case. The lubricity requirement for the fuel upstream of the engine is a maximum of 520 µm WSD in each case according to ISO 12156-1.

Military fuel specification

The fuel types F-75 or F-76 as per NATO STANAG 1385 may be used. The following must be observed when doing so:

- According to the specification, the minimum permissible fuel viscosity for F-75 & F-76 is 1.7 mm²/s at 40 °C. This corresponds to a minimum fuel viscosity of 1.5 mm²/s at 45 °C (upstream of the engine).
- Use of a low-viscosity fuel (1.7 cSt at 40 °C) does not immediately cause the injection system to fail.
- A more severe leakage can trigger a variety of alarms!
- Extended operation of the engine with low-viscosity fuel leads to shortened maintenance intervals for the components of the injection system!
- If permanent operation with low-viscosity fuel is intended, a fuel cooling system should be installed. Contact MAN Energy Solutions for further information.
- The lubricity requirements of the fuel for the engine are always max. 520 µm WSD as per ISO 12156-1.

Synthetic fuels (DIN EN 15940)

When using synthetic fuels according to DIN EN 15940 with a density of less than 820 kg/m^2 at 15 °C, prior consultation with Everllence is required.

Synthetic fuels such as HVO, BTL, CTL, GTL according to DIN EN 15940, can be produced from renewable electrical energy and CO_2 or from the same basic material such as FAME fuels (vegetable oil, cooking oil, animal fat) but in a completely different procedure. Synthetic fuels are produced by means of hydrogen treatment, with a fuel being generated which has a very similar chemical structure to high-performance diesel fuel and consists of paraffinic hydrocarbons. In contrast to fossil diesel fuel, synthetic fuel barely contains any aromatic components, which causes very good combustion properties.

Although the energy content (per mass unit) is higher in comparison with fossil diesel fuel, the volumetric energy content is lower due to the lower density (typically approx. 780 kg/m³ at 15°C). This may lead to deviations in the specified engine output, operating behaviour, load application and emissions as well as deviations in the specific fuel consumption.

The lubricity of synthetic fuels is relatively low. In order to meet fuel specifications (requirements on diesel fuel) and guarantee sufficient lubricity of the fuel, the fuel supplier needs to add a lubricity additive or FAME.

The lower flashpoint limit is too low at a minimum of 55°C. The additional requirement relating to flashpoint min. 60 °C in SOLAS regulated areas must be observed.

We strongly advise against using a mixture of HFO and synthetic fuel (in accordance with EN 15940). The reason is that the HFO contains asphaltenes, which are held in solution by the aromatics contained in HFO. Synthetic fuel is purely paraffinic (does not contain any aromatics) and therefore cannot hold asphaltenes in solution. This means that when synthetic fuel is added to HFO, these asphaltenes precipitate, deposits form or fuel filters become clogged or, in the worst case scenario, the injection system fails.

2025-06-16 - 1.0

FAME (fatty acid methyl ester) additive of 0.5 to 100% (DFA)

The following values must be maintained at the engine inlet:

Property	Unit		Limit value[1]	Standard[2]
Appearance	-	-	Clear, bright and free from visible contamination	visually
Kinematic viscosity at 40° C[3]	mm^2/s	Max. Min.	6.0 2.0	ISO 3104, ASTM D7042, ASTM D445, DIN EN 16896
Density at 15°C	kg/m^3	Max. Min.	890.0 820.0	ISO 3675, ISO 12185
Water content	% (m/m)	Max.	0.02	DIN 51777, DIN EN 12937, ASTM D6304
Cetane number		Min.	40	EN ISO 5165, IP541, EN 15195, EN 16715, EN 17155
Sulphur content[4]	% (m/m)	Max.	1.0	ISO 8754, ISO 14596, ASTM D4294, DIN 51400-10
Flashpoint[5]	°C	Min.	60.0	ISO 2719
Acid number	mg KOH/g	Max.	0.5	ASTM D664
Carbon residue[6]	% (m/m)	Max.	0.30	ISO 10370
Ash content	% (m/m)	Max.	0.010	ISO 6245
Lubricity (WSD)	µm	Max.	520	ISO 12156-1, ASTM D6079
Corrosion effect on copper	Class	Max.	1	EN ISO 2160
Hydrogen sulphide	mg/kg	Max.	2.0	IP 570
FAME[7]-content	% (V/V)	Min.	0.5	ASTM D7963, IP 579, DIN EN 14078
Oxidation stability	h	Min.	8	EN 15751
Sediment content[8]	% (m/m)	Max.	0.01	ISO 10307-1
CFPP	°C		10°C below the lowest temperature in the fuel system	DIN EN 116, IP 309, IP 612)
Pour Point[9] winter grade	°C	Max.	-6	ISO 3016
Pour Point[9] summer grade	°C	Max.	0	ISO 3016
Na, K, Ca, P, Cu, Zn, Si	mg/kg	Max.	free from	DIN EN 16476

Table 146: Requirements for diesel fuel (DMA)

Remarks:

[1] The fuel must be suitable for the intended application. It must not contain any substance in a concentration that causes additional air pollution, is harmful for personnel, jeopardises ship safety and/or has an adverse effect on machine performance. The fuel must be free from non-ferrous metals according to DIN EN 16476. The fuel must not contain any waste oil.

[2] Always refer to the currently applicable edition.

2025-06-16 - 1.0

[3] Specific requirements of the injection system must be taken into account

[4] Independent of the maximum permissible sulphur content, local laws and regulations must be adhered to

[5] Additional requirements (e.g. SOLAS) must be observed. Applicable laws must be adhered to.

[6] Determined at 10% distillation residue

[7] The FAME must either be in accordance with EN 14214 or with ASTM D6751 as well as with increased oxidation stability of at least 8 hours (EN 15751).

[8] If the sample is not clear and bright, complete sedimentation through hot filtration and the determination of water content is required

[9] 10°C below the lowest temperature in the fuel system

When using DFA (FAME according to EN 14214 or ASTM D6751* or their mixtures with DMA), prior consultation with Everllence is required. In addition, the following should be observed:

- Due to the typically lower calorific value or energy content of FAME fuels and their mixtures with DMA (DFA), it may result in deviations to the specified engine output, operating behaviour, load application, specific fuel consumption and emissions.
- The sealing materials used must be suitable for DFA. NBR seals are not suitable and must not be used.
- DFA tends to attract water. The risk of microbial growth is therefore increased. For this reason, the water content needs to be kept as low as possible. The maximum water content must not be exceeded. MAN Energy Solutions recommends draining water from the fuel tank every day.
- Long standstill periods (e.g. emergency power units) must be avoided due to microbial growth. To prevent damage, it is recommendable to only operate applications with fuel which is free of FAME (DMA).
- The fuel reacts to air and this may lead to microbial growth. Ensure that the atmospheric oxygen ventilation is kept to a minimum. A nitrogen buffer is ideally installed in the fuel tank.
- The entire fuel system must be purged with fuel which is free of FAME (DMA) prior to longer standstill periods.
- If DFA is to be used with other fuels and mixing cannot be avoided, contact your fuel supplier to ensure the compatibility of these fuels.
- It is recommended that wherever possible a heat tracing system is installed in the fuel supply system, in order to prevent deposits or blockage of the lines.
- As DFA have a higher evaporation temperature than standard DMA qualities, these are enriched in lubricating oil. Regular analysis of all the lubricating oil is highly recommended. The lubricating oil needs to be replaced if a FAME content of 12% is reached.
- DFA may cause a layer to form, such a phenomenon leads to increased consumption of lubricating oil. If such an increase in lubricating oil consumption values is detected, please contact your MAN PrimeServ department.
- Fuels may cause harmful reactions with metals such as zinc or copper. We highly recommend getting in contact with your tank and heating oil system supplier.
- After switching to DFA, pay attention to the delta pressure indicators/ alarms of the filters, as the residues dissolved by DFA can clog the filters.

2025-06-16 - 1.0

- In any case, it is the responsibility of the operating company to adhere to the legal requirements (e.g. SOLAS) and agree on these with the relevant authorities.

* as well as with increased oxidation stability of at least 8 hours (EN 15751)

Cold suitability

The cold suitability of the fuel is determined by the climatic requirements at the place of installation. It is the responsibility of the operating company to choose a fuel with sufficient cold suitability.

The cold suitability of a fuel may be determined and assessed using the following standards:

- Limit of filterability (CFPP) as per EN 116
- Pour point as per ISO 3016
- Cloud point as per EN 23015

To be able to draw a reliable conclusion, it is recommended to perform all three stated procedures.

Analyses

The examination of fuel samples is essential for safe engine operation. Examinations can be carried out in the MAN Energy Solutions PrimeServLab laboratory for our customers.

To guarantee the safety of the crew and to obtain a representative sample, sampling must take place in accordance with valid MAN Energy Solutions operating instructions.

4.5 Marine diesel oil (DMB, DFB) specification

General information

Marine diesel oil as a heavy distillate is available for marine applications only. Another name is: Marine diesel oil (MDO) It is made from crude oil and may contain synthetic components (e.g. BtL, CtL, GtL and HVO). The fuel is treated the same as residual fuel in the supply chain. This means that it is possible for the fuel to be blended with high-viscosity residual fuel residue, e.g. in a bunker vessel, and it might therefore contain residue from crude oil processing. This can affect the properties of the fuel.

Selection of suitable fuel

Unsuitable or adulterated fuel generally results in a shortening of the service life of engine parts/components, damage to these and to catastrophic engine failure. It is therefore important to select the fuel with care in terms of its suitability for the engine and the intended application. Through its combustion, the fuel influences the emissions behaviour of the engine.

Specifications and approvals

The fuel quality varies regionally and depends on climatic conditions. All requirements from ISO 8217:2024 apply.

The following values must be maintained at the engine inlet:

2025-06-16 - 1.0

Property	Unit		Limit value[1]	Standard[2]
Appearance[3]	–	–	Free from contamination	visually
Kinematic viscosity at 40 °C[4]	mm^2/s	Max. Min.	11.0 2.0	ISO 3104, ASTM D7042, ASTM D445, DIN EN 16896
Density at 15°C	kg/m^3	Max. Min.	900.0 820.0	ISO 3675, ISO 12185
Water content	% (m/m)	Max.	0.02	DIN 51777, DIN EN 12937, ASTM D6304
Cetane number		Min.	35	EN ISO 5165, IP541, EN 15195, EN 16715, EN 17155
Sulphur content[5]	% (m/m)	Max.	1.50	EN ISO 8754, EN ISO 14596, ASTM D4294, DIN 51400-10
Flashpoint[6]	°C	Min.	60.0	ISO 2719
Acid number	mg KOH/g	Max.	0.5	ASTM D664
Carbon residue	% (m/m)	Max.	0.30	ISO 10370
Ash content	% (m/m)	Max.	0.010	ISO 6245
Lubricity (WSD)	µm	Max.	520	ISO 12156-1, ASTM D6079
Corrosion effect on copper	Class	Max.	1	ISO 2160
Hydrogen sulphide	mg/kg	Max.	2.0	IP 570
FAME[7]-content DMB	% (V/V)	Max.	0.5	ASTM D7963, IP 579, DIN EN 14078
FAME[7]-content DFB	% (V/V)	Max.	7.0	ASTM D7963, IP 579, DIN EN 14078
Oxidation stability DMB	g/m^3	Min.	25	ISO 10307-1
Oxidation stability[8] DFB	h	Min.	8.0	ISO 10370
Na, K, Ca, P, Cu, Zn, Si	mg/kg	Max.	free from	DIN EN 16476

Table 147: Requirements for diesel fuel (DMB/DFB)

Remarks:

[1] The fuel must be suitable for the intended application. It must not contain any substance in a concentration that causes additional air pollution, is harmful for personnel, jeopardises ship safety and/or has an adverse effect on machine performance. The fuel must be free from non-ferrous metals according to DIN EN 16476. The fuel must not contain any waste oil.

[2] Always in relation to the currently applicable edition.

[3] Only possible with clear samples. If the sample is not clear or contains visible contamination, the check must be completed mandatorily for the entire sediment.

[4] Specific requirements of the injection system must be taken into account

[5] Local laws and regulations must be observed independently of the maximum possible sulphur content.

[6] Additional requirements (e.g. SOLAS) must be observed. Applicable laws must be adhered to.

2025-06-16 - 1.0

[7] The FAME must either be in accordance with EN 14214 or with ASTM D6751 as well as with increased oxidation stability of at least 8 hours (EN 15751).

[8] If there is more than 2% (V/V) FAME, an analysis as per EN15751 must additionally be carried out.

Approved fuels

The following fuels are approved for use if the fuel complies with table Requirements for diesel fuel (DMB/DFB), Page 266:

- Class ISO F-DMB according to ISO 8217:2024
- Class ISO F-DFB according to ISO 8217:2024 with additional requirement regarding oxidation stability

Please submit enquiries to MAN Energy Solutions for all fuels which do not meet the abovementioned standards.

Viscosity

In order to ensure sufficient lubrication, a minimum level of viscosity must be ensured at the fuel injection pump. The specified maximum temperature required to maintain a viscosity of more than 1.9 mm^2/s upstream of the fuel injection pump depends on the fuel viscosity. The temperature of the fuel upstream of the fuel injection pump must not exceed 45 °C in any case. The lubricity requirement for the fuel upstream of the engine is a maximum of 520 µm WSD in each case according to ISO 12156-1.

Contamination

We recommend installing a separator upstream of the fuel filter. Separation temperature 40–50°C. Most solid particles (sand, corrosion and catalytic converter fragments) and water can thus be removed and the cleaning intervals for the filter elements can be significantly extended.

FAME (fatty acid methyl ester) additive up to max. 7%

Using fuels with biofuel admixture based on fatty acid methyl ester (FAME) of max. 7 vol. % is possible.
The FAME must comply with the requirements stipulated in EN 14214 or ASTM D6751.*

It is the responsibility of the operating company that the fuel always complies with all requirements in table Requirements for diesel fuel (DMB/DFB), Page 266.

Applications with longer standstill periods (e.g. emergency power units) can be affected by fuel ageing. To prevent damage, it is recommendable to only operate these applications with fuel which is free of FAME or to purge the entire fuel system with fuel which is free of biodiesel prior to longer standstill periods.

FAME blends typically contain a higher water content. This higher water content must be reduced by appropriate means in order to adhere to the maximum permissible water content at the engine inlet.

In any case, it is the responsibility of the operating company to adhere to the legal requirements (e.g. SOLAS).

MAN Energy Solutions is not liable for damage caused to the engine or subsequent damage resulting from this caused by FAME fuel blends.

2025-06-16 - 1.0

* as well as with increased oxidation stability of at least 8 hours (EN 15751)

Cold suitability

The cold suitability of the fuel is determined by the climatic requirements at the place of installation. It is the responsibility of the operating company to choose a fuel with sufficient cold suitability.

The cold suitability of a fuel may be determined and assessed using the following standards:

- Limit of filterability (CFPP) as per EN 116
- Pour point as per ISO 3016
- Cloud point as per EN 23015

To be able to draw a reliable conclusion, it is recommended to perform all three stated procedures.

Analyses

The examination of fuel samples is essential for safe engine operation. Examinations can be carried out in the MAN Energy Solutions PrimeServLab laboratory for our customers.

To guarantee the safety of the crew and to obtain a representative sample, sampling must take place in accordance with valid MAN Energy Solutions operating instructions.

4.6 Residual fuel (HFO) specification

General information

Four-stroke diesel engines from MAN Energy Solutions can be powered with any residual fuel recovered from crude oil that fulfils the requirements specified in the table Heavy fuel oil requirements, provided that the engine and the fuel management system are designed accordingly. It is also referred to as: Residual fuels (RM), FAME Residual fuels (RF). In order to ensure a favourable ratio between fuel costs, spare parts and also repair and servicing expenditure, we recommend observing the following points.

Selection of suitable fuel

Unsuitable or adulterated fuel generally results in a shortening of the service life of engine parts/components, damage to these and to catastrophic engine failure. It is therefore important to select the fuel with care in terms of its suitability for the engine and the intended application. Through its combustion, the fuel influences the emissions behaviour of the engine.

Specifications and approvals

The fuel quality varies regionally and depends on climatic conditions. All requirements from ISO 8217:2024 apply

The following values must be maintained at the engine inlet:

Property	Unit		Limit value[1)]	Standard[2)]
Kin. Viscosity at 50 °C[3)]	mm/s	Max.	700	EN ISO 3104, ASTM D7042, ASTM D445, DIN EN 16896
		Min.	1.9	

2025-06-16 - 1.0

Property	Unit		Limit value[1]	Standard[2]
Kin. Viscosity at 100 °C[3]	mm/s	Max.	55	EN ISO 3104, ASTM D7042, ASTM D445, DIN EN 16896
Density at 15 °C	kg/m^3	Max.	1010	ISO 3675, ISO 12185
Water content[4]	% (m/m)	Max.	0.20	DIN 51777, ASTM D6304, DIN ISO 3733
Sulphur content[5]	% (m/m)	Max.	5.0	ISO 8754, ISO 14596, ASTM D4294
Flashpoint[6]	°C	Min.	60.0	ISO 2719
Acid number	mg KOH/g	Max.	2.5	ASTM D664
Carbon residue (CCR)	% (m/m)	Max.	20.0	EN ISO 10370
Ash content	% (m/m)	Max.	0.150	ISO 6245
Hydrogen sulphide	mg/kg	Max.	2.0	IP 570
Total sediment (aged)	% (m/m)	Max.	0.10	ISO 10307-2
Asphaltene content	% (m/m)	Max.	2/3 x CCR	Factory standard, DIN 51595
Fatty acid methyl ester content[7]	% (m/m)		Report	ASTM D7963, IP 631, DIN EN 14078, DIN EN 14103
Pour point[8]	°C	Max.	30	ISO 3016
Vanadium	mg/kg	Max.	450	IP 501, IP 470, ISO 14597, DIN EN 15944 DIN 51790-6
Sodium	mg/kg	Max.	100 and 1/3 x vanadium	IP 501, IP 470
Aluminium and silicone[9]	mg/kg	Max.	15	IP 501, IP 470, DIN ISO 10478
Calcium Zinc	mg/kg mg/kg	Max. Max.	30 15	IP 501, IP 470
Calcium Phosphorus	mg/kg mg/kg	Max. Max.	30 15	IP 501, IP 470, IP 500
CCAI[10]		Max.	870	

Table 148: Heavy fuel oil requirements

Remarks:

[1] Engine inlet requirement: Additional parameters defined for ISO 8217. The entire ISO 8217:2024 document is mandatory. The fuel mixture at the engine inlet must be homogeneous. The fuel mixture is homogeneous if the p-value according to ASTM D7060 is at min. 1.20. Other processes (e.g. ASTM D7112 or ASTM D7157) can also be used to check the homogeneity of the fuel mixture. Furthermore, the fuel must be fit for use and must not contain substances in a concentration that contributes to further contamination of the air and/or may impair the safety of personnel or the performance of the machine.

[2] Always reference the latest edition.

[3] If FAME is present in the HFO (RF), the max. viscosity is limited to 500 mm^2/s at 50 °C.
Specific requirements of the injection system must be taken into account.

2025-06-16 - 1.0

[4] According to ISO 8217:2024, the bunker product (before purification) may contain max. 0.50 % water.

[5] Local laws and regulations must be observed independently of the maximum possible sulphur content.

[6] Additional requirements (e.g. SOLAS) must be observed. Applicable laws must be adhered to.

[7] When using RF (FAME according to EN 14214 or ASTM D6751* or their mixtures with HFO), prior consultation with MAN Energy Solutions is required.
The FAME must either be in accordance with EN 14214 or with ASTM D6751 as well as with increased oxidation stability of at least 8 hours (EN 15751). For additional information, see FAME mixtures, Page 276.

[8] The pour point must be suitably selected by the operator in accordance with the design of the fuel system and on the basis of the requirements at the place of use.

[9] The bunker product (prior to purification) may contain max. 60 mg/kg Al and Si.

[10] This method is only applicable to 'straight run' residual oils. The increasing complexity of refinery processes means that the CCAI method does not correctly reproduce the ignition behaviour for all residual oils. A test device (fuel combustion analyser; FCA) based on the constant volume combustion method measures the ignition delay to determine the ignition quality of a fuel and this measurement is converted into the cetane number (ECN: Estimated Cetane Number). It was discovered that residual fuels with a low ECN number cause malfunctions and can even lead to engine damage. An ECN > 20 can be considered acceptable.

Please submit enquiries to MAN Energy Solutions for all fuels which do not meet the abovementioned standards.

Residual fuel (HFO)

Origin/refinery process

The quality of the residual fuel depends to a large extent on the quality of the crude oil and the refining process used. For this reason, residual fuels of the same viscosity can have significantly different properties depending on the bunker spaces. Residual fuel can consist of a mixture of residual oil, distillates and FAME. Residual oils and distillates generally originate from modern refining processes, such as CatCracker or Visbreaker. These processes can have an adverse affect on the stability of the fuel and on the ignition and combustion properties. These factors also have a considerable effect on the preparation of the residual fuel and the operating results of the engine.

The engine operator is responsible for selecting the corresponding residual fuels.

Important

The fuel properties in the Residue Fuel Requirements table Heavy fuel oil requirements, even if they meet the requirements mentioned there, may not be sufficient to determine the ignition and combustion properties and stability of the fuel. This means that the operational performance of the engine may depend on properties that are not defined in the specification. This particularly applies to the oil property that causes formation of deposits in the combustion chamber, injection system, gas pipes and exhaust system. A number of fuels have a tendency towards incompatibility with lubricating oil which leads to deposits being formed in the fuel injection pump that can cause a blockage of the pumps. It may therefore be necessary to exclude specific fuels that could cause problems.

2025-06-16 - 1.0

Blends

The addition of engine oils (old lubricating oil, ULO – used lubricating oil) and additives that are not manufactured from mineral oils, (coal-tar oil, for example), and residual products of chemical or other processes such as solvents (polymers or chemical waste) is not permitted. Some of the reasons for this are as follows: abrasive and corrosive effects, unfavourable combustion characteristics, poor compatibility with mineral oils and, last but not least, adverse effects on the environment. The order for the fuel must expressly state what is not permitted as the fuel specifications that generally apply do not include this limitation.

If engine oils (old lubricating oil, ULO – used lubricating oil) are added to fuel, this poses a particular danger as the additives in the lubricating oil act as emulsifiers that cause dirt, water and catfines to be transported as fine suspension. They therefore prevent the necessary cleaning of the fuel. In our experience (and this has also been the experience of other manufacturers), this can severely damage the engine and turbocharger components.

The addition of chemical waste products (solvents, for example) to the fuel is prohibited for environmental protection reasons according to the resolution of the IMO Marine Environment Protection Committee passed on 1st January 1992.

Leak oil collector

Leak oil collectors that act as receptacles for leak oil, and also return and overflow pipes in the lube oil system, must not be connected to the fuel tank. Leak oil lines should be emptied into sludge tanks.

Please submit enquiries to MAN Energy Solutions for all fuels which do not meet the abovementioned standards.

Additional information

The following information will clarify the correlation between the quality of the residual fuel, fuel preparation, engine operation and the operating results.

Viscosity/injection viscosity

Residual fuels with higher viscosity can be of lower quality. The maximum permissible viscosity depends on the available pre-heating equipment and the capacity (flow rate) of the separator.

The prescribed injection viscosity of 12-14 mm^2/s and the corresponding fuel temperature upstream of the engine must be complied with. Only in this way can a suitable atomisation and mixture formation be ensured and therefore low-residue combustion. This also prevents mechanical overload of the injection system at the same time. The prescribed injection viscosity and/or the required fuel oil temperature upstream of the engine can be found in the viscosity temperature diagram.

Heavy fuel oil preparation

Fault-free engine operation depends to a considerable extent on the care with which the heavy fuel oil was prepared. Particular attention should be paid to ensuring that inorganic foreign matter with a strongly abrasive effect (catalyst particles, rust, sand) are effectively separated. It has been shown in practice that wear as a result of abrasion in the engine increases considerably if the aluminium and silicon content is higher than 15 mg/kg.

Viscosity and density have an influence on the cleaning effect. This must be taken into account when designing and installing the cleaning system.

Vanadium/Sodium

If the vanadium/sodium ratio is unfavourable, the melting point of the ash may fall in the operating area of the exhaust valve which can lead to high-temperature corrosion. Most of the water and water-soluble sodium compounds it contains can be removed by pre-treating the heavy fuel oil in the settling tank and in the separators.

2025-06-16 - 1.0

The risk of high-temperature corrosion is low if the sodium content is one third of the vanadium content or less. It must also be ensured that sodium does not enter the engine in the form of seawater in the intake air.

If the sodium content is higher than 100 mg/kg, this is likely to result in a higher quantity of salt deposits in the combustion chamber and exhaust-gas system. This will impair the function of the engine (including the suction function of the turbocharger).

Under certain conditions, high-temperature corrosion can be prevented using a fuel additive that increases the melting point of heavy fuel oil ash (see also Residual fuel (HFO) specification, Page 275).

Ash

Fuel ash consists for the greater part of vanadium oxide and nickel sulphate (see above chapter for more information). Heavy fuel oil containing a high proportion of ash in the form of foreign matter, e.g. sand, corrosion compounds and catalyst particles, accelerates the mechanical wear in the engine. Catalyst particles produced as a result of the catalytic cracking process may be present in the heavy fuel oil. In most cases, these catalyst particles are aluminium silicates causing a high degree of wear in the injection system and the engine.

Flashpoint

National and international regulations for transport and storage involving the use of fuel must be considered in regard to the flashpoint. In general, a flashpoint of above 60 °C is specified for fuels of diesel engines.

Low-temperature performance

The pour point is the temperature at which the fuel can no longer flow (but can be pumped). Since many residual fuels with low viscosity have a pour point above 0°C, the bunker facility must also be pre-heated. The entire fuel system must be designed in such a way that the residual fuel can be pre-heated to around 10°C above the pour point.

Pump properties

If the viscosity of the fuel is higher than 700 mm^2/s (cSt), or the temperature is not at least 10°C above the pour point, pump problems will occur. For more information, also refer to section Low-temperature behaviour.

Combustion properties

If the proportion of asphaltene is more than two thirds of the coke residue (Conradson), combustion may be delayed which in turn may increase the formation of combustion residues, leading to such as deposits on and in the injection nozzles, large amounts of smoke, low output, increased fuel consumption and a rapid rise in ignition pressure as well as combustion close to the cylinder wall (thermal overloading of lubricating oil film). If the ratio of asphaltene to coke residues reaches the limit 0.66, and if the asphaltene content exceeds 8%, the risk of deposits forming in the combustion chamber and injection system is higher. These problems can also occur when using unstable heavy fuel oil, or if incompatible heavy fuel oil are blended. This would lead to an increased separation of asphalt (see section Compatibility, Page 275).

Ignition quality

Nowadays, to achieve the prescribed reference viscosity, cracking-process products are used as the low viscosity ingredients of residual fuels although the ignition characteristics of these may also be poor. The cetane number of these compounds should be > 35. If the proportion of aromatic hydrocarbons is high (more than 35%), this also adversely affects the ignition quality.

The ignition delay in residual fuels with poor ignition characteristics is longer, the combustion is also delayed which can lead to thermal overloading of the oil film at the cylinder liner and also high cylinder pressures. The ignition delay and accompanying increase in pressure in the cylinder are also influenced by the end temperature and compression pressure, i.e. by the compression ratio, the charge-air pressure and charge-air temperature.

2025-06-16 - 1.0

The disadvantages of using fuels with poor ignition characteristics can be limited by pre-heating the charge air in partial load operation and reducing the output for a limited period. However, a more effective solution is a high compression ratio and operational adjustment of the injection system to the ignition characteristics of the fuel used, as is the case with MAN Energy Solutions.

The ignition quality is one of the most important properties of the fuel. This value appears as CCAI in ISO 8217. This method is only applicable to 'straight run' residual oils. The increasing complexity of refinery processes has the effect that the CCAI method does not correctly reflect the ignition behaviour for all residual oils.

A test instrument based on the Fuel Combustion Analyser (FCA) method has been developed, which is used in some fuel testing laboratories (FCA according to IP 541).
The ignition quality of a fuel is determined as the ignition delay in the instrument and converted into an instrument-dependent cetane number (ECN: Estimated Cetane Number). It has been determined that residual fuels with a low ECN number cause operating problems and may even lead to damage to the engine. An ECN > 20 can be considered acceptable.

As the liquid components of the residual fuel have a decisive influence on the ignition quality, and flow properties determine the combustion quality, the system operator is responsible for obtaining a fuel that is suitable for the diesel engine. Also see illustration entitled Nomogram for determining the CCAI – assigning the CCAI ranges to engine types, Page 274.

2025-06-16 - 1.0

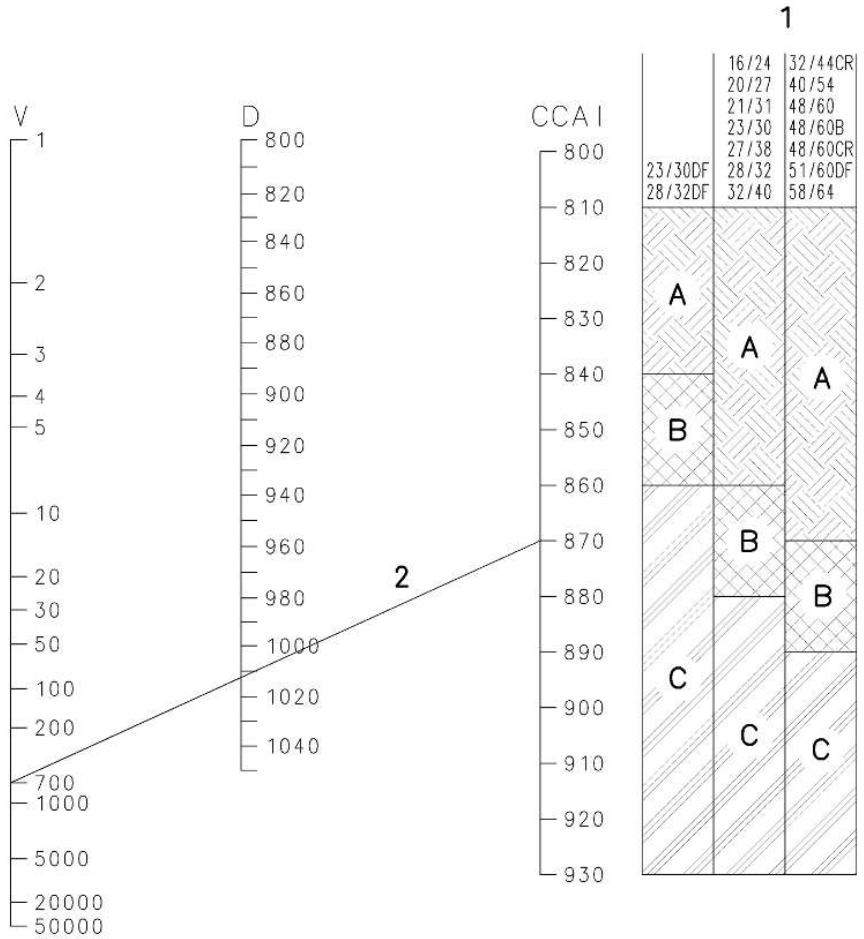

V Viscosity in mm^2/s (cSt) at 50°C

D Density [in kg/m^3] at 15°C

CCAI **C**alculated **C**arbon **A**romaticity **I**ndex

1 Engine type

A Normal operating conditions

B The ignition characteristics can be poor and require an adjustment to the engine or the operating conditions.

C Any problems identified can even lead to engine damage after a short operating period.

2 The CCAI is calculated from the density and viscosity of the heavy fuel oil.

The CCAI can be calculated with the help of the following formula:

$$CCAI = D - 141 \log \log (V+0.85) - 81$$

Figure 109: Nomogram for determining the CCAI and assigning the CCAI ranges to engine types

2025-06-16 - 1.0

Sulphuric acid corrosion

The engine should be operated at the coolant temperatures prescribed in the operating handbook for the relevant load. If the temperature of the components that are exposed to acidic combustion products is below the acid dew point, acid corrosion can no longer be effectively prevented, even if alkaline lube oil is used.

Stability

The fuel must be a homogeneous mixture when entering the engine. Precipitation of any fuel components is not permissible! Experience has shown that stability decreases with continued storage and the given conditions. It is hence of great interest to the operator that the fuel has the maximum possible stability reserve so that it can provide a homogeneous fuel mixture at all times when entering the engine (see table Heavy fuel oil requirements).

Compatibility

The supplier must guarantee that the heavy fuel oil is homogeneous and remains stable even after the usual storage time. If different bunker oils are mixed, this may lead to separation that is connected with sludge build-up in the fuel system and where large quantities of sludge can be deposited in the separator, clog up the filter, prevent atomisation and lead to residue-rich combustion.

Cases like this can be traced back to incompatibility or instability. The fuel storage tanks should therefore be drained as much as possible before they can be bunkered again, in order to avoid incompatibilities.

Contamination

The fuel must not contain any substances that can lead to instability or deposits, otherwise engine operation may be impaired or engine damage may occur. With the help of an analysis according to ASTM D7845 (GC-MS), such substances can be partially detected and analysed. The fuel should be free of all substances listed in ASTM D7845, or their concentration should be below the limit of quantification noted therein. Proportions above the limit of quantification of all substances listed in ASTM D7845 can cause problems in engine operation. The combination of different substances could also cause problems with the engine even in a small amount.

Mixing residue fuels

If residual fuel for the main engine is blended with distillate fuel (e.g. DMA, FAME) or other residual fuels, to obtain the required quality, it is essential that the components are compatible (see section Compatibility, Page 275). The compatibility of the resulting mixture must be tested over the entire mixing range. Reduced long-term stability due to consumption of the stability reserve can be a result. If a mixture of different fuels is planned or unavoidable, the stability reserve of the fuel must be sufficient to ensure that non-homogeneous fuels are not produced when blending.

Mixture with synthetic fuel

We strongly advise against using a mixture of HFO and synthetic fuel (in accordance with EN 15940). The reason is that the HFO contains asphaltenes, which are held in solution by the aromatics contained in HFO. Synthetic fuel is purely paraffinic (does not contain any aromatics) and therefore cannot hold asphaltenes in solution. This means that when synthetic fuel is added to HFO, these aromatics precipitate, deposits form or fuel filters become clogged or, in the worst case scenario, the injection system fails.

Additives for heavy fuel oil

MAN Energy Solutions- Engines can also be economically operated without additives. It is up to the customer to decide whether or not the use of additives is beneficial. The supplier of the additive must guarantee that the engine operation will not be impaired by using the product.

As a rule, the use of fuel additives during the warranty period must be avoided.

2025-06-16 - 1.0

If the lubrication oil quality and the engine cooling system fulfil the specified requirements, the BN values stated in section 010.005 Engine – Operating Instructions 010.000.023-11 are sufficient.

heavy fuel oil with low sulphur content

From the perspective of an engine manufacturer, there is no lower threshold for the sulphur content of heavy fuel oil. We have not identified any issues that can be traced to the sulphur content with the low-sulphur heavy fuel oils that are currently commercially available.

If the engine is not constantly operated with low-sulphur heavy fuel oil, the lubricating oil must be selected accordingly for the highest sulphur content of the utilised fuels.

FAME mixtures

FAME admixtures (RF20 to RF500)

When using RF (FAME according to EN 14214 or ASTM D6751* and their mixtures with HFO), prior consultation with MAN Energy Solutions is required. In addition, the following should be observed:

- The fuel mixture at the engine inlet must be homogeneous. The fuel mixture is homogeneous if the p-value according to ASTM D7060 is at least 1.20. Other processes (e.g. ASTM D7112 or ASTM D7157) can also be used to check the homogeneity of the fuel mixture. Furthermore, the fuel must be fit for use and must not contain substances in a concentration that contribute to further contamination of the air and/or may impair the safety of personnel or the performance of the machine.
- If RF is to be used with other fuels and blending cannot be avoided, contact your fuel supplier to ensure the compatibility of these fuels.
- After switching to RF, pay attention to the delta pressure indicators/alarms of the filters, as they can become clogged by residues dissolved by RF.
- Heating is installed and active in the fuel supply system to prevent deposits or blockages to the pipes.
- The temperature resistance of the fuel must be guaranteed up to 150°C.
- Storage and leakage handling of FAME fuels, FAME mixtures with residual fuels and distillate fuels must be separated from each other in order to avoid incompatibility reactions due to the mixing of larger amounts of different fuels.
- Due to the typically lower calorific value or energy content of RF, it may result in deviations to the specified engine output, operating behaviour, load application, specific fuel consumption and emissions.
- Fuels may cause harmful reactions with metals such as zinc or copper. We highly recommend getting in contact with your tank and heating oil system supplier.
- The sealing materials used must be suitable for RF. NBR seals are not suitable and must not be used.
- RF reacts to air and this may lead to microbial growth. Ensure that the atmospheric oxygen ventilation is kept to a minimum. A nitrogen buffer is ideally installed in the fuel tank.
- RF tends to attract water. This increases the risk of microbial growth. Correctly adjust the separator to the new fuel type.
- If free water appears in the fuel tanks, it is important to drain this water immediately.
- Long standstill periods (e.g. emergency power units) must be avoided due to microbial growth. To prevent damage, it is recommendable to only operate applications with fuel which is free of FAME.

2025-06-16 - 1.0

- The entire fuel system must be purged with fuel which is free of FAME prior to longer standstill periods.
- Since FAME has a higher evaporation temperature, it accumulates in the lubricating oil. Regular analysis of all the lubricating oil is highly recommended. The lubricating oil needs to be replaced if a FAME content of 12% is reached.
- RF may cause a layer to form, such a phenomenon leads to increased consumption of lubricating oil. If such an increase in lubricating oil consumption values is detected, please contact your MAN PrimeServ department.

In any case, it is the responsibility of the operating company to adhere to the legal requirements (e.g. SOLAS) and agree on these with the relevant authorities.

* as well as with increased oxidation stability of at least 8 hours (EN 15751).

Cold suitability

The cold suitability of the fuel is determined by the climatic requirements at the place of installation. It is the responsibility of the operating company to choose a fuel with sufficient cold suitability.

The cold suitability of a fuel may be determined and assessed using the following standard:

- Pour point as per ISO 3016

Analyses

To ensure sufficient cleaning of the fuel via the separator, perform regular functional check by sampling up- and downstream of the separator.

The examination of fuel samples is essential for safe engine operation. Examinations can be carried out in the MAN Energy Solutions PrimeServLab laboratory for our customers.

To guarantee the safety of the crew and to obtain a representative sample, sampling must take place in accordance with valid MAN Energy Solutions operating instructions.

2025-06-16 - 1.0

4.7 Viscosity-temperature diagram (VT diagram)

Explanations of viscosity-temperature diagram

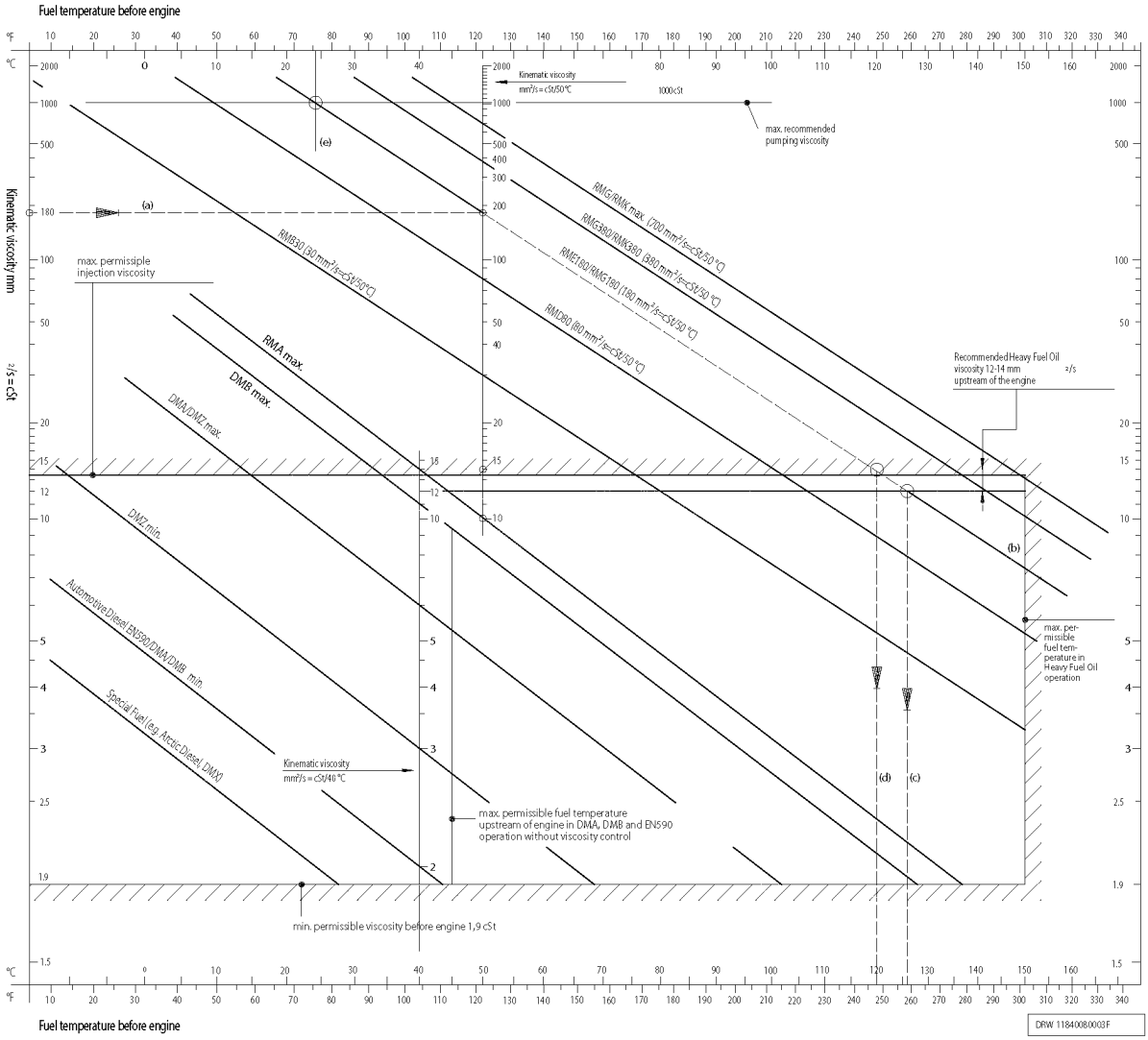

Figure 110: Viscosity-temperature diagram (VT diagram)

In the diagram, the fuel temperatures are shown on the horizontal axis and the viscosity is shown on the vertical axis.

The diagonal lines correspond to viscosity-temperature curves of fuels with different reference viscosities. The vertical viscosity axis in mm²/s (cSt) applies for 40, 50 or 100 °C.

Determining the viscosity-temperature curve and the required preheating temperature

Example: Heavy fuel oil with 180 mm²/s at 50 °C

Prescribed injection viscosity in mm²/s	Required fuel temperature at the engine inlet[1)] in °C
≥ 12	126 (line c)
≤ 14	119 (line d)

2025-06-16 - 1.0

Prescribed injection viscosity in mm²/s	Required fuel temperature at the engine inlet[1] in °C
[1] For these figures, the temperature drop from the last pre-heating device to the fuel injection pump is not taken into account.	

Table 149: Determining the viscosity temperature trend and the required pre-heating temperature

A heavy fuel oil with a viscosity of 180 mm^2/s at 50 °C can reach a viscosity of 1,000 mm^2/s at 24 °C (line e) – this is the maximum permissible viscosity of fuel that the pump can deliver.

A heavy fuel oil discharge temperature of 152 °C is reached when using a recent state-of-the-art preheating device with 8 bar saturated steam. At higher temperatures there is a risk of residues forming in the preheating system – this leads to a reduction in heating output and thermal overloading of the heavy fuel oil. Asphalt is also formed in this case, i.e. quality deterioration.

The heavy fuel oil lines between the outlet of the last preheating system and the injection valve must be suitably insulated to limit the maximum drop in temperature to 4 °C. This is the only way to achieve the necessary injection viscosity of 14 mm^2/s for heavy fuel oils with a reference viscosity of 700 mm^2/s at 50 °C (the maximum viscosity as defined in the international specifications such as ISO CIMAC or British Standard). If heavy fuel oil with a low reference viscosity is used, the injection viscosity should ideally be 12 mm^2/s in order to achieve more effective atomisation to reduce the combustion residue.

The delivery pump must be designed for heavy fuel oil with a viscosity of up to 1,000 mm^2/s. The pour point also determines whether the pump is capable of transporting the heavy fuel oil. The bunker facility must be designed so as to allow the heavy fuel oil to be heated to roughly 10 °C above the pour point.

Note:

The viscosity of gas oil or diesel oil (marine diesel oil) upstream of the engine must be at least 1.9 mm^2/s. If the viscosity is too low, this may cause seizing of the pump plunger or nozzle needle valves as a result of insufficient lubrication.

This can be avoided by monitoring the temperature of the fuel. Although the maximum permissible temperature depends on the viscosity of the fuel, it must never exceed the following values:

- 45 °C at the most with MGO (DMA) and MDO (DMB)

A fuel cooler must therefore be installed.

If the viscosity of the fuel is < 2 cSt at 40 °C, consult the technical service of MAN Energy Solutions in Augsburg.

4.8 Specification of engine coolant

Preliminary remarks

An engine coolant is composed as follows: water for heat removal and coolant additive for corrosion protection.

Like the fuel and lubricating oil, the engine coolant must be carefully selected, handled and checked. If this is not the case, corrosion, erosion and cavitation may occur at the walls of the cooling system in contact with water and deposits may form. Deposits obstruct the transfer of heat and can cause thermal overloading of the cooled parts. The system must be treated with an anticor-

2025-06-16 - 1.0

rosive agent before bringing it into operation for the first time. The concentrations prescribed by the engine manufacturer must always be observed during subsequent operation. The above especially applies if a chemical additive is added.

Requirements

Limit values

The properties of untreated coolant must correspond to the following limit values:

Properties/Characteristic	Properties	Unit
Water type	Distillate or fresh water, free of foreign matter.	–
Total hardness	max. 10	dGH[1)]
pH value	6.5 – 8	–
Chloride ion content	max. 50	mg/l[2)]

Table 150: Properties of coolant that must be complied with

[1)] 1 dGH (German hardness) ≙ 10 mg CaO in 1 litre of water ≙ 17.8 mg $CaCO_3$/l

≙ 0.357 mval/l ≙ 0.178 mmol/l

[2)] 1 mg/l ≙ 1 ppm

Testing equipment

The manufacturers of anticorrosive agents supply user-friendly testing equipment.

For information on monitoring cooling water, see section Coolant inspecting, Page 284.

Additional information

Distillate

If distilled water (from a fresh water generator, for example) or fully desalinated water (from ion exchange or reverse osmosis) is available, this should ideally be used as the engine coolant. These waters are free of lime and salts, which means that deposits that could interfere with the transfer of heat to the coolant, and therefore also reduce the cooling effect, cannot form. However, these waters are more corrosive than normal hard water as the thin film of lime scale that would otherwise provide temporary corrosion protection does not form on the walls. This is why distilled water must be handled particularly carefully and the concentration of the additive must be regularly checked.

Hardness

The total hardness of the water is the combined effect of the temporary and permanent hardness. The proportion of calcium and magnesium salts is of overriding importance. The temporary hardness is determined by the carbonate content of the calcium and magnesium salts. The permanent hardness is determined by the amount of remaining calcium and magnesium salts (sulphates). The temporary (carbonate) hardness is the critical factor that determines the extent of limescale deposit in the cooling system.

Water with a total hardness of > 10°dGH must be mixed with distilled water or softened. Subsequent hardening of extremely soft water is only necessary to prevent foaming if emulsifiable slushing oils are used.

2025-06-16 - 1.0

Damage to the cooling water system

Corrosion

Corrosion is an electrochemical process that can widely be avoided by selecting the correct water quality and by carefully handling the water in the engine cooling system.

Flow cavitation

Flow cavitation can occur in areas in which high flow velocities and high turbulence is present. If the steam pressure is reached, steam bubbles form and subsequently collapse in high pressure zones which causes the destruction of materials in constricted areas.

Erosion

Erosion is a mechanical process accompanied by material abrasion and the destruction of protective films by solids that have been drawn in, particularly in areas with high flow velocities or strong turbulence.

Stress corrosion cracking

Stress corrosion cracking is a failure mechanism that occurs as a result of simultaneous dynamic and corrosive stress. This may lead to cracking and rapid crack propagation in water-cooled, mechanically-loaded components if the coolant has not been treated correctly.

Treatment of engine coolant

Formation of a protective film

The purpose of treating the engine coolant using anticorrosive agents is to produce a continuous protective film on the walls of cooling surfaces and therefore prevent the damage referred to above. In order for an anticorrosive agent to be 100 % effective, it is extremely important that untreated water satisfies the requirements in the paragraph Requirements, Page 280.

A list of currently approved coolant additives and their concentration can be found at https://corporate.man-es.com/lubrication.

Additives for coolants

Only additives that have been approved by MAN Energy Solutions and are listed in the section Permitted coolant additives, Page 284 may be used.

In closed circuits only

Additives may only be used in closed circuits where no significant consumption occurs, apart from leaks or evaporation losses. Observe the applicable environmental protection regulations when disposing of coolant containing additives. For more information, consult the additive supplier.

Chemical additives

Sodium nitrite and sodium borate based additives etc. have a proven track record. Galvanised iron pipes or zinc sacrificial anodes must not be used in cooling systems. This corrosion protection is not required due to the prescribed coolant treatment and electrochemical potential reversal that may occur due to the coolant temperatures which are usual in engines nowadays. If necessary, the pipes must be deplated.

Slushing oil

For MAN Energy Solutions engines, it is not permissible to use corrosion protection oils in the cooling water circuit.

Antifreeze agents

If temperatures below the freezing point of water in the engine cannot be excluded, an antifreeze agent that also prevents corrosion must be added to the cooling system or corresponding parts. Otherwise, the entire system must be heated.

2025-06-16 - 1.0

Sufficient corrosion protection is achieved by adding the antifreeze additives listed under Permitted coolant additives, Page 284, whereby the prescribed minimum concentration must be observed. This concentration prevents freezing at temperatures as low as -22°C and ensures adequate corrosion protection. However, the amount of antifreeze actually required always depends on the lowest temperatures to be expected at the place of use.

Antifreezes are generally based on ethylene glycol. A suitable chemical corrosion inhibitor must be added if the concentration of antifreeze prescribed by the user for a particular application is not sufficient to achieve adequate corrosion protection or if a lower concentration of antifreeze is used than would be required for adequate corrosion protection due to less stringent antifreeze requirements. As the antifreeze agents listed under Permitted coolant additives, Page 284 also contain corrosion inhibitors that are not generally compatible with other anticorrosion agents, only pure glycol may be used as antifreeze in these cases.

Simultaneous use of a nitrite-free coolant additive with glycol is not permitted, as it is no longer possible to monitor the concentration of the corrosion inhibitor in such a mixture.

Antifreeze agents reduce the capacity of the coolant to absorb heat. In some cases the cooling effect of the coolant may not be sufficient for certain operation conditions. The MAN Energy Solutions standard design is not based on using antifreeze agents. In case it is intended to use anti-freeze agent, consult MAN Energy Solutions beforehand.

Before an antifreeze agent is used, the cooling system must be thoroughly cleaned.

If the coolant contains emulsifiable slushing oil, antifreeze agent may not be added as otherwise the emulsion would break up and oil sludge would form in the cooling system.

Biocides

If you cannot avoid using a biocide because the coolant has been contaminated by bacteria, observe the following steps:

- You must ensure that the biocide to be used is suitable for the specific application
- The biocide must be compatible with the sealing materials used in the coolant system and must not react with these
- The biocide and its decomposition products must not contain corrosion-promoting components. Biocides whose decomposition products contain chloride or sulphate ions are not permitted
- Biocides that cause foaming of coolant are not permitted
- It is not recommended to use biocides permanently but only as a shock treatment

Prerequisite for effective use of an anticorrosive agent

Clean cooling system

As contamination significantly reduces the effectiveness of the additive, the tanks, pipes, coolers and other parts outside the engine must be free of rust and other deposits before the engine is started up for the first time and after repairs of the pipe system.

2025-06-16 - 1.0

The entire system must therefore be cleaned with the engine switched off using a suitable cleaning agent (see section Cooling water system cleaning, Page 286).

Loose solid matter in particular must be removed by flushing the system thoroughly as otherwise erosion may occur in locations where the flow velocity is high.

The cleaning agents must not corrode the seals and materials of the cooling system. In most cases, the supplier of the coolant additive will be able to carry out this work and, if this is not possible, will at least be able to provide suitable products to do this. If this work is carried out by the engine operator, he should use the services of a specialist supplier of cleaning agents. The cooling system must be flushed thoroughly after cleaning. Once this has been done, the engine coolant must be immediately treated with anticorrosive agent. Once the engine has been brought back into operation, the cleaned system must be checked for leaks.

Regular checks of the coolant condition and system

Treated coolant can become contaminated during operation and the additive can lose some of its effectiveness. It is therefore advisable to check the cooling system and the condition of the coolant regularly. To detect leaks in the lubricating oil system, regular checking of the water in the expansion tank is recommended. Signs of oil in the water include discoloration or a visible oil film on the surface of the water sample.

Check the additive concentration using the test kits provided by the additive manufacturer at least once per week. The results must be recorded.

Note:

The chemical additive concentrations shall not be less than the minimum concentrations specified. See paragraph Permitted coolant additives, Page 284.

Excessively low concentrations lead to corrosion and must be avoided. Concentrations that are somewhat higher do not cause damage. Concentrations that are more than twice as high as recommended should be avoided.

Every 2 to 6 months, a coolant sample must be sent to an independent laboratory or to the engine manufacturer for an integrated analysis.

If chemical additives or antifreeze agents are used, coolant should be replaced after 3 years at the latest.

If there is a high concentration of solids (rust) in the system, the water must be completely replaced and entire system carefully cleaned.

Deposits in the cooling system may be caused by fluids that enter the coolant or by emulsion break-up, corrosion in the system, and limescale deposits if the water is very hard. If the concentration of chloride ions has increased, this generally indicates that seawater has entered the system. The maximum specified concentration of 50 mg chloride ions per kg must not be exceeded as otherwise the risk of corrosion is too high. If exhaust gas enters the coolant, this can lead to a sudden drop in the pH value or to an increase in the sulphate content.

Water losses must be compensated by filling with untreated water that meets the quality requirements specified in the paragraph Requirements, Page 280. The concentration of anticorrosive agent must subsequently be checked and adjusted if necessary.

2025-06-16 - 1.0

Subsequent checks of the coolant are especially required if the coolant had to be drained off in order to carry out repairs or maintenance.

Protective measures

Anticorrosive agents contain chemical compounds that can pose a risk to health or the environment if incorrectly used. Comply with the directions in the manufacturer's material safety data sheets.

Avoid prolonged direct contact with the skin. Wash hands thoroughly after use. If larger quantities spray and/or soak into clothing, remove and wash clothing before wearing it again.

If chemicals come into contact with your eyes, rinse them immediately with plenty of water and seek medical advice.

Anticorrosive agents are generally harmful to the water cycle. Observe the relevant statutory requirements for disposal.

Auxiliary engines

If the same cooling water system used in a MAN Energy Solutions two-stroke main engine is used in a marine engine of type 16/24, 21/ 31, 23/30H, 27/38 or 28/32H, the cooling water recommendations for the main engine must be observed.

Analyses

MAN Energy Solutions can analyse antifreeze agent for their customers in the chemical laboratory PrimeServLab. A 0.25 l sample is required for the test.

Permitted coolant additives

A list of currently approved coolant additives and their concentration can be found at https://corporate.man-es.com/lubrication.

4.9 Coolant inspecting

Summary

Acquire and check typical values of the operating media to prevent or limit damage.

The freshwater used to fill the cooling water circuits must satisfy the specifications. The cooling water in the system must be checked regularly in accordance with the maintenance schedule.

The following work/steps is/are necessary:

Acquisition of typical values for the operating fluid, evaluation of the operating fluid and checking the concentration of the anticorrosive agent.

Tools/equipment required

Equipment for checking the fresh water quality

The following equipment can be used:

- The water testing kit with all necessary instruments and chemicals that determine the water hardness, pH value and chloride content (obtainable from Mar-Tec Marine, Hamburg).

Equipment for testing the concentration of additives

When using chemical additives:

2025-06-16 - 1.0

- Testing equipment in accordance with the supplier's recommendations. Testing kits from the supplier also include equipment that can be used to determine the fresh water quality.

Testing the typical values of water

Short specification

Typical value/property	Water for filling and refilling (without additive)	Circulating water (with additive)
Water type	Fresh water, free of foreign matter	Treated coolant
Total hardness	≤ 10 dGH[1)]	≤ 10 dGH[1)]
pH value	6.5 – 8 at 20 °C	≥ 7.5 at 20 °C
Chloride ion content	≤ 50 mg/l	≤ 50 mg/l[2)]

Table 151: Quality specifications for coolants (short version)

[1)] dGH German hardness

1 dGH = 10 mg/l CaO
= 17.8 mg/l $CaCO_3$
= 0.178 mmol/L

[2)] 1 mg/l = 1 ppm

Testing the concentration of rust inhibitors

Short specification

Anticorrosive agent	Concentration
Chemical additives	According to the quality specification, see section Specification of engine coolant, Page 279.
Anti-freeze agents	

Table 152: Concentration of coolant additives

Testing the concentration of chemical additives

The concentration should be tested every week, and/or according to the maintenance schedule, using the testing instruments, reagents and instructions of the relevant supplier.

Chemical anti-corrosion agents can only provide effective protection if the concentration is precisely maintained. Respectively, the concentrations recommended by MAN Energy Solutions (quality specifications in section Specification of engine coolant, Page 279) must be maintained under all circumstances. These recommended concentrations may deviate from those specified by the manufacturer.

Testing the concentration of anti-freeze agents

The concentration must be checked in accordance with the manufacturer's instructions or the test can be outsourced to a suitable laboratory. If in doubt, consult MAN Energy Solutions.

Regular water samplings

Small quantities of lube oil in coolant can be found by visual check during regular water sampling from the expansion tank.

Testing

Regular analysis of coolant is very important for safe engine operation. We can analyse cooling water, fuel and lube oil for our customers at MAN Energy Solutions laboratory Everllence PrimeServLab.

2025-06-16 - 1.0

4.10 Cooling water system cleaning

Summary

Remove contamination/residue from operating fluid systems, ensure/re-establish operating reliability.

Cooling water systems containing deposits or contamination prevent effective cooling of parts. Contamination and deposits must be regularly eliminated.

This comprises the following:

Cleaning the system and, if required removal of limescale deposits, flushing the system.

Cleaning

The coolant system must be checked for contamination at regular intervals. Cleaning is required if the degree of contamination is high. This work should ideally be carried out by a specialist who can provide the right cleaning agents for the type of deposits and materials in the cooling circuit. The cleaning should only be carried out by the engine operator if this cannot be done by a specialist.

Oil sludge

Oil sludge from lubricating oil that has entered the cooling system or a high concentration of anticorrosive agents can be removed by flushing the system with fresh water to which some cleaning agent has been added. Suitable cleaning agents are listed alphabetically in the table entitled Cleaning agents for removing oil sludge., Page 286 Products by other manufacturers can be used providing they have similar properties. The manufacturer's instructions for use must be strictly observed.

Manufacturer	Product	Concentration	Duration of cleaning procedure/temperature
Drew	HDE - 777	4 – 5%	4 h at 50 – 60 °C
Nalfleet	MaxiClean 2	2 – 5%	4 h at 60 °C
Unitor	Aquabreak	0.05 – 0.5%	4 h at ambient temperature
Vecom	Ultrasonic Multi Cleaner	4%	12 h at 50 – 60 °C

Table 153: Cleaning agents for removing oil sludge

Lime and rust deposits

Lime and rust deposits can form if the water is especially hard or if the concentration of the anticorrosive agent is too low. A thin lime scale layer can be left on the surface as experience has shown that this protects against corrosion. However, limescale deposits with a thickness of more than 0.5 mm obstruct the transfer of heat and cause thermal overloading of the components being cooled.

Rust that has been flushed out may have an abrasive effect on other parts of the system, such as the sealing elements of the water pumps. Together with the elements that are responsible for water hardness, this forms what is known as ferrous sludge which tends to gather in areas where the flow velocity is low.

Products that remove limescale deposits are generally suitable for removing rust. Suitable cleaning agents are listed alphabetically in the table entitled Cleaning agents for removing limescale and rust deposits., Page 287 Products by other manufacturers can be used providing they have similar

2025-06-16 - 1.0

properties. The manufacturer's instructions for use must be strictly observed. Prior to cleaning, check whether the cleaning agent is suitable for the materials to be cleaned. The products listed in the table entitled Cleaning agents for removing limescale and rust deposits, Page 287 are also suitable for stainless steel.

Manufacturer	Product	Concentration	Duration of cleaning procedure/temperature
Drew	SAF-Acid Descale-IT Ferroclean	5 – 10 % 5 – 10 % 10 %	4 h at 60 – 70 °C 4 h at 60 – 70 °C 4 – 24 h at 60 – 70 °C
Nalfleet	Nalfleet 9 - 068	5 %	4 h at 60 – 75 °C
Unitor	Descalex	5 – 10 %	4 – 6 h at approx. 60 °C
Vecom	Descalant F	3 – 10 %	ca. 4 h at 50 – 60 °C

Table 154: Cleaning agents for removing lime scale and rust deposits

In emergencies only

Hydrochloric acid diluted in water or aminosulphonic acid may only be used in exceptional cases if a special cleaning agent that removes limescale deposits without causing problems is not available. Observe the following during application:

- Stainless steel heat exchangers must never be treated using diluted hydrochloric acid.
- Cooling systems containing non-ferrous metals (aluminium, red bronze, brass, etc.) must be treated with deactivated aminosulphonic acid. This acid should be added to water in a concentration of 3 – 5 %. The temperature of the solution should be 40 – 50 °C.
- Diluted hydrochloric acid may only be used to clean steel pipes. If hydrochloric acid is used as the cleaning agent, there is always a danger that acid will remain in the system, even when the system has been neutralised and flushed. This residual acid promotes pitting. We therefore recommend you have the cleaning carried out by a specialist.

The carbon dioxide bubbles that form when limescale deposits are dissolved can prevent the cleaning agent from reaching boiler scale. It is therefore absolutely necessary to circulate the water with the cleaning agent to flush away the gas bubbles and allow them to escape. The length of the cleaning process depends on the thickness and composition of the deposits. Values are provided for orientation in the table entitled Cleaning agents for removing limescale and rust deposits, Page 287.

Following cleaning

The cooling system must be flushed several times once it has been cleaned using cleaning agents. Replace the water during this process. If acids are used to carry out the cleaning, neutralise the cooling system afterwards with suitable chemicals then flush. The system can then be refilled with water that has been prepared accordingly.

Note:

Start the cleaning operation only when the engine has cooled down. Hot engine components must not come into contact with cold water. Open the venting pipes before refilling the cooling water system. Blocked venting pipes prevent air from escaping which can lead to thermal overloading of the engine.

Note:

The products to be used can endanger health and may be harmful to the environment. Follow the manufacturer's handling instructions without fail.

2025-06-16 - 1.0

The applicable regulations governing the disposal of cleaning agents or acids must be observed.

4.11 Specification of intake air (combustion air)

General

The quality and condition of intake air (combustion air) have a significant effect on the engine output, wear and emissions of the engine. In this regard, not only are the atmospheric conditions extremely important, but also contamination by solid and gaseous foreign matter.

Mineral dust in the intake air increases wear. Chemicals and gases promote corrosion.

This is why effective cleaning of intake air (combustion air) and regular maintenance of the air filter are required.

When designing the intake air system, the maximum permissible overall pressure drop (filter, silencer, pipe line) of 20 mbar must be taken into consideration.

Exhaust turbochargers for marine engines are equipped with silencers and air filters as a standard.

Requirements

Liquid fuel engines: As minimum, inlet air (combustion air) must be cleaned by an ISO Coarse 45% class filter as per DIN EN ISO 16890, if the combustion air is drawn in from inside (e.g. from the machine room/engine room). If the combustion air is drawn in from outside, in the environment with a risk of higher inlet air contamination (e.g. due to sand storms, due to loading and unloading grain cargo vessels or in the surroundings of cement plants), additional measures must be taken. This includes the use of pre-separators, pulse filter systems and a higher grade of filter efficiency class at least up to ISO ePM10 50% according to DIN EN ISO 16890.

Gas engines and dual-fuel engines: As minimum, inlet air (combustion air) must be cleaned by an ISO COARSE 45% class filter as per DIN EN ISO 16890, if the combustion air is drawn in from inside (e.g. from machine room/engine room). Gas engines or dual-fuel engines must be equipped with a dry filter. Oil bath filters are not permitted because they enrich the inlet air with oil mist. This is not permissible for gas operated engines because this may result in engine knocking. If the combustion air is drawn in from outside, in the environment with a risk of higher inlet air contamination (e.g. due to sand storms, due to loading and unloading grain cargo vessels or in the surroundings of cement plants) additional measures must be taken. This includes the use of pre-separators, pulse filter systems and a higher grade of filter efficiency class at least up to ISO ePM10 50% according to DIN EN ISO 16890.

In general, the following applies:

The inlet air path from air filter to engine shall be designed and implemented airtight so that no false air may be drawn in from the outdoor.

The concentration downstream of the air filter and/or upstream of the turbocharger inlet must not exceed the following limit values.

The air must not contain organic or inorganic silicon compounds.

2025-06-16 - 1.0

Properties	Limit	Unit [1]
Dust (sand, cement, CaO, Al_2O_3 etc.)	max. 5	mg/Nm^3
Chlorine	max. 1.5	
Sulphur dioxide (SO_2)	max. 1.25	
Hydrogen sulphide (H_2S)	max. 5	
Salt (NaCl)	max. 1	
[1] One Nm^3 corresponds to one cubic meter of gas at 0 °C and 101.32 kPa.		

Table 155: Typical values for intake air (combustion air) that must be complied with

Note:

Intake air shall not contain any flammable gases. Make sure that the combustion air is not explosive and is not drawn in from the ATEX Zone.

4.12 Specification of compressed air

General

For compressed air quality observe the ISO 8573-1. Compressed air must be free of solid particles and oil (acc. to the specification).

Requirements

Compressed air quality of starting air system

The starting air must fulfil at least the following quality requirements according to ISO 8573-1.

Purity regarding solid particles	Quality class 6
Particle size > 40µm	max. concentration < 5 mg/m^3
Purity regarding moisture	Quality class 7
Residual water content	< 0.5 g/m^3
Purity regarding oil	Quality class X

Additional requirements are:

- The air must not contain organic or inorganic silicon compounds.
- The layout of the starting air system must ensure that no corrosion may occur.
- The starting air system and the starting air receiver must be equipped with condensate drain devices.
- By means of devices provided in the starting air system and via maintenance of the system components, it must be ensured that any hazardous formation of an explosive compressed air/lube oil mixture is prevented in a safe manner.

Compressed air quality in the control air system

Please note that control air will be used for the activation of some safety functions on the engine – therefore, the compressed air quality in this system is very important.

Control air must meet at least the following quality requirements according to ISO 8573-1.

2025-06-16 - 1.0

- Purity regarding solid particles Quality class 5
- Purity regarding moisture Quality class 4
- Purity regarding oil Quality class 3

For catalysts

The following specifications are valid unless otherwise defined by any other relevant sources:

Compressed air quality for soot blowing

Compressed air for soot blowing must meet at least the following quality requirements according to ISO 8573-1.

- Purity regarding solid particles Quality class 3
- Purity regarding moisture Quality class 4
- Purity regarding oil Quality class 2

Compressed air quality for reducing agent atomisation

Compressed air for atomisation of the reducing agent must fulfil at least the following quality requirements according to ISO 8573-1.

- Purity regarding solid particles Quality class 3
- Purity regarding moisture Quality class 4
- Purity regarding oil Quality class 2

Note:

To prevent clogging of catalyst and catalyst lifetime shortening, the compressed air specification must always be observed.

4.13 Specification of urea solution

Use of good quality urea solution is essential for the operation of a SCR catalyst.

Note:
The overall SCR system is designed for an aqueous solution having a urea content of 40 % as listed in the table below. This must be taken into account when ordering.

Urea 40% must meet the standard of ISO 18611. Everllence recommends urea according to the specification below.

	Urea solution concentration 39 – 41 [%]	Test method
Density at 20 °C [g/cm^3]	1.105 – 1.115	DIN EN ISO 12185
Refractive index at 20 °C	1.3930 – 1.3962	ISO 18611-2 Annex C
Biuret [%]	max. 0.5	ISO 18611-2 Annex E
Alkality as NH_3 [%]	max. 0.5	ISO 18611-2 Annex D
Aldehyde [mg/kg]	max. 10	ISO 18611-2 Annex F
Insolubles [mg/kg]	max. 20	ISO 18611-2 Annex G
Phosphorus (as PO_4) [mg/kg]	max. 0.5	ISO 18611-2 Annex H
Calcium [mg/kg]	max. 0.5	ISO 18611-2 Annex I

2025-06-16 - 1.0

	Urea solution concentration 39 – 41 [%]	Test method
Iron [mg/kg]	max. 0.5	ISO 18611-2 Annex I
Magnesium [mg/kg]	max. 0.5	ISO 18611-2 Annex I
Sodium [mg/kg]	max. 0.5	ISO 18611-2 Annex I
Potassium [mg/kg]	max. 0.5	ISO 18611-2 Annex I
Aluminium [mg/kg]	max. 0.5	ISO 22241-2 Annex I
Nickel [mg/kg]	max. 0.2	ISO 22241-2 Annex I
Copper [mg/kg]	max. 0.2	ISO 22241-2 Annex I
Zinc [mg/kg]	max. 0.2	ISO 22241-2 Annex I
Chromium [mg/kg]	max. 0.2	ISO 22241-2 Annex I

Table 156: Urea 40 % solution specification

2025-06-16 - 1.0

This page is intentionally left blank

2025-06-16 - 1.0

5 Engine supply systems

5.1 3D Engine Viewer – A support programme to configure the engine room

MAN Energy Solutions offers a free-of-charge online programme for the configuration and provision of installation data required for installation examinations and engine room planning: The 3D Engine Viewer and the 3D GenSet Viewer.

Easy-to-handle selection and navigation masks permit configuration of the required engine type, as necessary for virtual installation in your engine room.

In order to be able to use the 3D Engine, respectively GenSet Viewer, register on our website under:

https://extranet.mandieselturbo.com/Pages/Dashboard.aspx

After successful registration, the 3D Engine and GenSet Viewer is available under:

https://extranet.mandieselturbo.com/content/appengineviewer/Pages/Default.aspx

by clicking onto the requested application.

In only three steps, you will obtain professional engine room data for your further planning:

- Selection

  Select the requested output, respectively the requested type.
- Configuration

  Drop-down menus permit individual design of your engine according to your requirements. Each of your configurations will be presented on the basis of isometric models.
- View

  The models of the 3D Engine Viewer and the 3D GenSet Viewer include all essential geometric and planning-relevant attributes (e.g. connection points, interfering edges, exhaust gas outlets, etc.) required for the integration of the model into your project.

The configuration with the selected engines can now be easily downloaded.

For 2D representation as:

- .pdf
- .dwg
- .dxf

for 3D as:

- .dgn
- .stp
- .sat
- .igs
- 3D-dxf
- and many others

2025-06-16 - 1.0

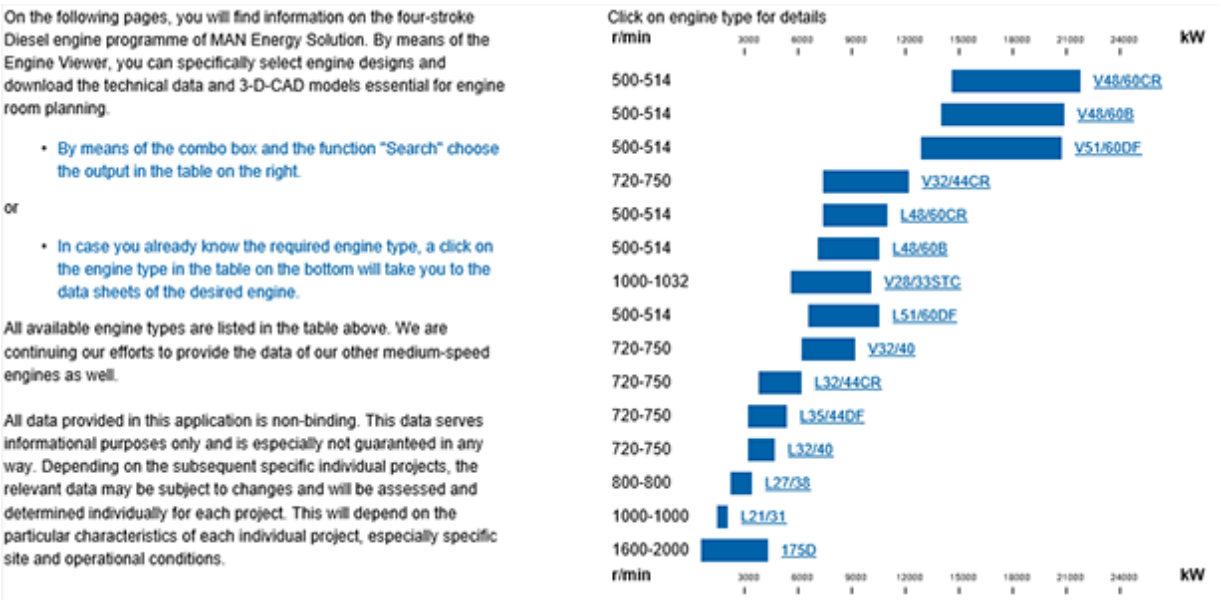

Figure 111: Selection of engine

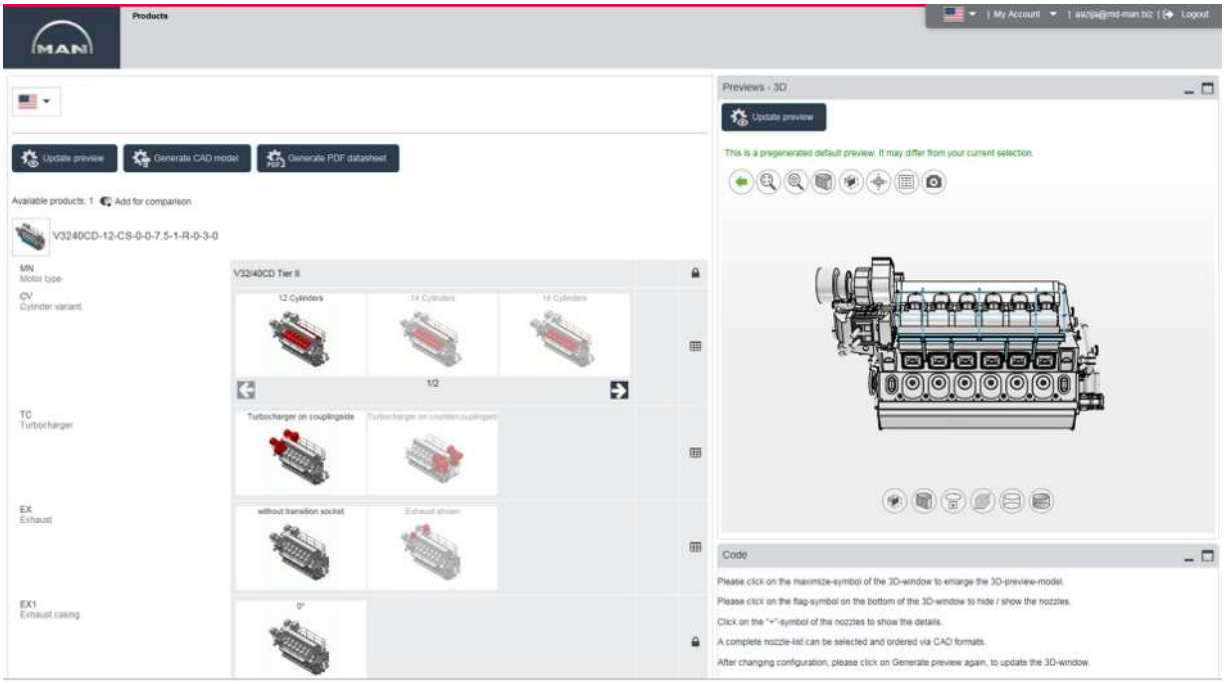

Figure 112: Preselected standard configuration

5.2 Basic principles for pipe selection

5.2.1 External pipe dimensioning

The external piping systems are to be dimensioned, designed, installed and connected to the engine by the shipyard. The pipe systems should to be designed in such a way that the pressure losses are kept within reasonable limits. To achieve this at justifiable cost, it is recommended to maintain the flow

rates as indicated below. Nevertheless, depending on specific conditions of piping systems, it may be necessary in some cases to adopt even lower flow rates. Generally, it is not recommended to use higher flow rates.

For small pipes a low flow speed has to calculated, for bigger pipes (> DN 125) the higher values may be chosen.

	Recommended flow rates (m/s)	
	Suction side	Delivery side
Fresh water (cooling water)	1.0–2.0	1.5–3.0
Lube oil	0.5–1.0	1.5–2.5
Seawater	1.0–1.5	1.5–2.5
Diesel fuel	0.5–1.0	1.5–2.0
Heavy fuel oil	0.3–0.8	1.0–1.8
Compressed air for control air system	-	2–10
Compressed air for starting air system	-	25–30 [1]
Intake air	20–25	
Exhaust gas	40	
[1] During engine start higher velocities acceptable, depends on total pressure loss of supply system.		

Table 157: Recommended flow rates

In addition to obtaining certain flow rates it is recommended to achieve an uniform inflow towards pumps. If disturbances in front of the pump cannot be avoided on the system side, the inflow musts be made uniform to a permissible level. This can be achieved, amongst other things, by a sufficiently long straight pipe section (approx. 5 to 8 times the nominal diameter DN between the pump and the point of interference), bends with a large radius of curvature, as well as other measures.

Bends have to be carried out using radius 1.5 x DN or higher. Sharp angles or other installations that may cause cavitation are to be avoided.

5.2.2 Specification of materials for piping

General

- The properties of the piping shall conform to international standards, e.g. DIN EN 10208, DIN EN 10216, DIN EN 10217 or DIN EN 10305, DIN EN 13480-3.
- For piping, carbon steel pipe should be used; stainless steel shall be used where necessary.
- Outer surface of carbon steel pipes needs to be primed and painted according to shipyard`s specification.
- The pipes are to be sound, clean and free from all imperfections. The internal surfaces must be thoroughly cleaned and all scale, grit, dirt and sand used in casting or bending has to be removed. No sand is to be used as packing during bending operations.
- In case of pipes with forged bends, care must be taken to ensure that inner surfaces are smooth and that no stray weld metal remains after joining.

2025-06-16 - 1.0

- Advices in MAN Energy Solutions work instruction 010.000.001-03. Pipelines cleaning, pickling and preservation. Carry out the pressure test for cleaning of steel pipes before fitting them together should be observed.
- Certain material combinations are sensitive to electro-chemical corrosion, therefore special attention must be paid to the arrangement within a pipe system including all connected components.
- All information given is to be regarded as indication only; the sole responsibility for the functionality and durability of the external piping system lies with the shipyard.

LT-, HT- and nozzle cooling water pipes

Galvanised steel pipe must not be used for the piping of the system as all additives contained in the engine cooling water attack zinc. Moreover, there is the risk of the formation of local electrolytic element couples where the zinc layer has been worn off, and the risk of aeration corrosion where the zinc layer is not properly bonded to the substrate.

Proposed material (EN)

P235GH, E235, X5CrNiMoTi17-12-2

Fuel oil pipes, lube oil pipes

Galvanised steel pipe must not be used for the piping of the system as acid components of the fuel may attack zinc.

Proposed material (EN)

E235, P235GH, X6CrNiMoTi17-12-2

Urea pipes (for SCR only)

Galvanised steel pipe, brass and copper components must not be used for the piping of the system.

Proposed material (EN)

X6CrNiMoTi17-12-2

Compressed air pipes

Galvanised steel pipe must not be used for the piping of the system.

Proposed material (EN)

E235, P235GH, X6CrNiMoTi17-12-2

Seawater pipes

Material depending on required flow speed and mechanical stress.

Proposed material

CuNiFe, glass fiber reinforced plastic, rubber lined steel

5.2.3 Installation of flexible pipe connections

Arrangement of hoses on engine

Flexible pipe connections are necessary to connect resiliently mounted engines with external piping systems. They are used to compensate the dynamic movements of the engine in relation to the external piping system.

2025-06-16 - 1.0

The engine´s movement on its foundation is caused by the engine´s rotation and torque itself as well as by rolling and pitching of the ship. Based on roll angles of +/- 22.5° and pitching of +/- 7.5° (according to prescriptive rules of classification societies) the excursions at the exhaust gas outlet can be up to 5 mm in X-, 25 mm in Y- and 6 mm in Z-direction. As the exhaust gas outlet is at the highest point of the engine the excursions at lower positions are smaller respectively. In order to obtain exact data on excursions at certain points, a project-specific calculation of the elastic engine mount is required.

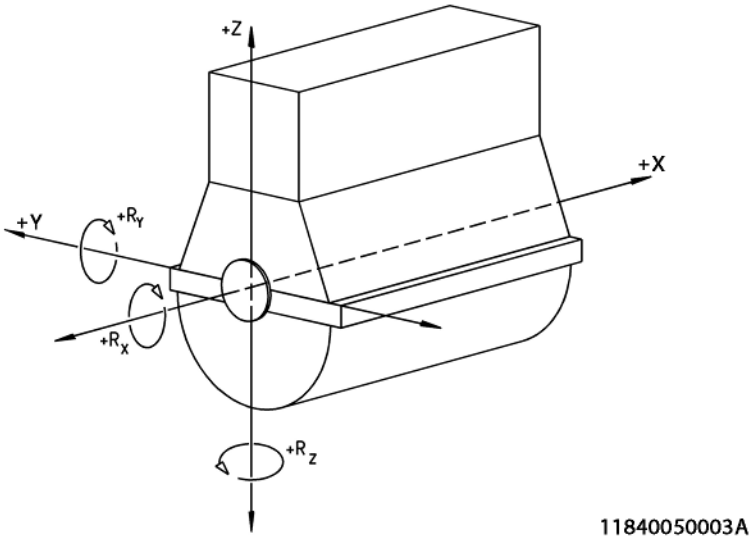

Figure 113: Coordinate system

Generally flexible pipes (rubber hoses with steel inlet, metal hoses, PTFE-corrugated hose-lines, rubber bellows with steel inlet, steel bellows, steel compensators) are nearly unable to compensate twisting movements. Therefore the installation direction of flexible pipes must be vertically (in Z-direction) if ever possible. Torsion on flexible pipe connections must be avoided. Flexible pipe connections which are installed in X-direction are particularly at risk. Therefore the installation of flexible pipe connections in this direction should be avoided. Where the installation of flexible pipe connections in X-direction is nevertheless unavoidable, the continuing pipeline on the plant side must be designed in such a way that the torsional forces can be safely absorbed. An installation in horizontal-lateral (Y-direction) is not recommended.

The media connections (compensators) to and from the engine must be highly flexible whereas the fixations of the compensators on the one hand with the engine and on the other hand with the environment must be realised as stiff as possible.

Flange and screw connections

Flexible pipes delivered loose by MAN Energy Solutions are fitted with flange connections from DN32 upwards. Smaller sizes are fitted with screw connections. Each flexible pipe is delivered complete with counter flanges or, those smaller than DN32, with weld-on sockets.

2025-06-16 - 1.0

Arrangement of the external piping system

Shipyard's pipe system must be exactly arranged so that the flanges or screw connections do fit without lateral or angular offset. Therefore it is recommended to adjust the final position of the pipe connections after engine alignment is completed.

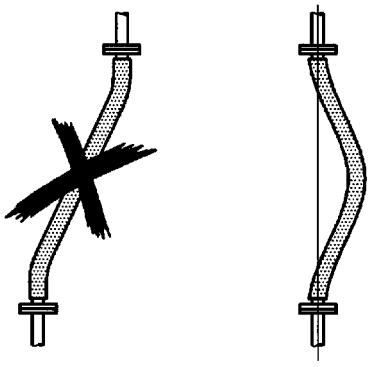

Figure 114: Arrangement of pipes in system

Installation of hoses

In the case of straight-line-vertical installation, a suitable distance between the hose connections has to be chosen, so that the hose is installed with a sag. To satisfy a correct sag in a straight-line-vertically installed hose, the distance between the hose connections (hose installed, engine stopped) has to be approximately 5% shorter than the same distance of the unconnected hose (without sag). Flexible hoses must not be installed with tensile stress, compression or torsional tension.

In case it is unavoidable (this is not recommended) to connect the hose in lateral-horizontal direction (Y-direction) the hose must preferably be installed with a 90° arc. The minimum bending radii, specified in provided drawings, are to be observed.

Hoses must not be twisted during installation. Turnable lapped flanges on the hoses avoid this.

Where bolted connections are used, hold the hexagon on the hose with a wrench while fitting the nut.

All installation instructions of the hose manufacturer have to be complied with.

Depending on the required application rubber hoses with steel inlet, metal hoses or PTFE-corrugated hose lines are used.

Installation of steel compensators

Steel compensators are used for hot media, e.g. exhaust gas. They can compensate movements in line and transversal to their centre line, but they are absolutely unable to compensate twisting movements. Compensators are very stiff against torsion. For this reason all kind of steel compensators installed on resilient mounted engines are to be installed in vertical direction.

Note:
Exhaust gas compensators are also used to compensate for thermal expansion. Exhaust gas compensators are therefore required for all type of engine mountings, also for semi-resilient or rigid mounted engines. But in these cases

2025-06-16 - 1.0

the compensators can be shorter, as they are designed only to compensate the thermal expansions and vibrations, but not other dynamic engine movements.

Supports of pipes

Flexible pipes must be installed as close as possible to the engine connection.

On the shipside, directly after the flexible pipe, the pipe is to be fixed with a sturdy pipe anchor of higher than normal quality. This anchor must be capable to absorb the reaction forces of the flexible pipe, the hydraulic force of the fluid and the dynamic force.

Example of the axial force of a compensator to be absorbed by the pipe anchor:

- Hydraulic force
  = (cross section area of the compensator) x (pressure of the fluid inside)
- Reaction force
  = (spring rate of the compensator) x (displacement of the comp.)
- Axial force
  = (hydraulic force) + (reaction force)

Additionally a sufficient margin has to be included to account for pressure peaks and vibrations.

2025-06-16 - 1.0

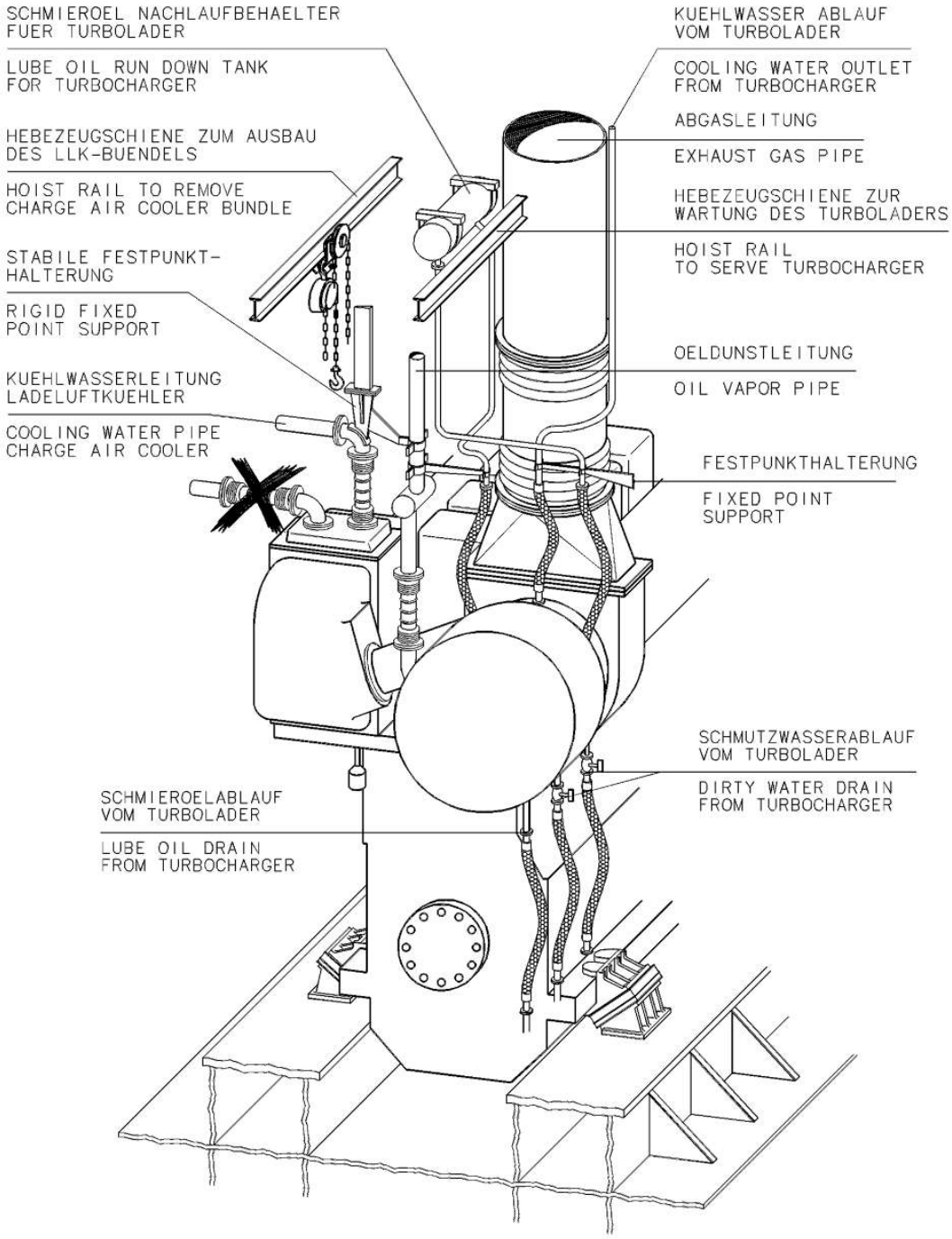

Figure 115: Installation of hoses

2025-06-16 - 1.0

5.2.4 Condensate amount in charge air pipes and air vessels

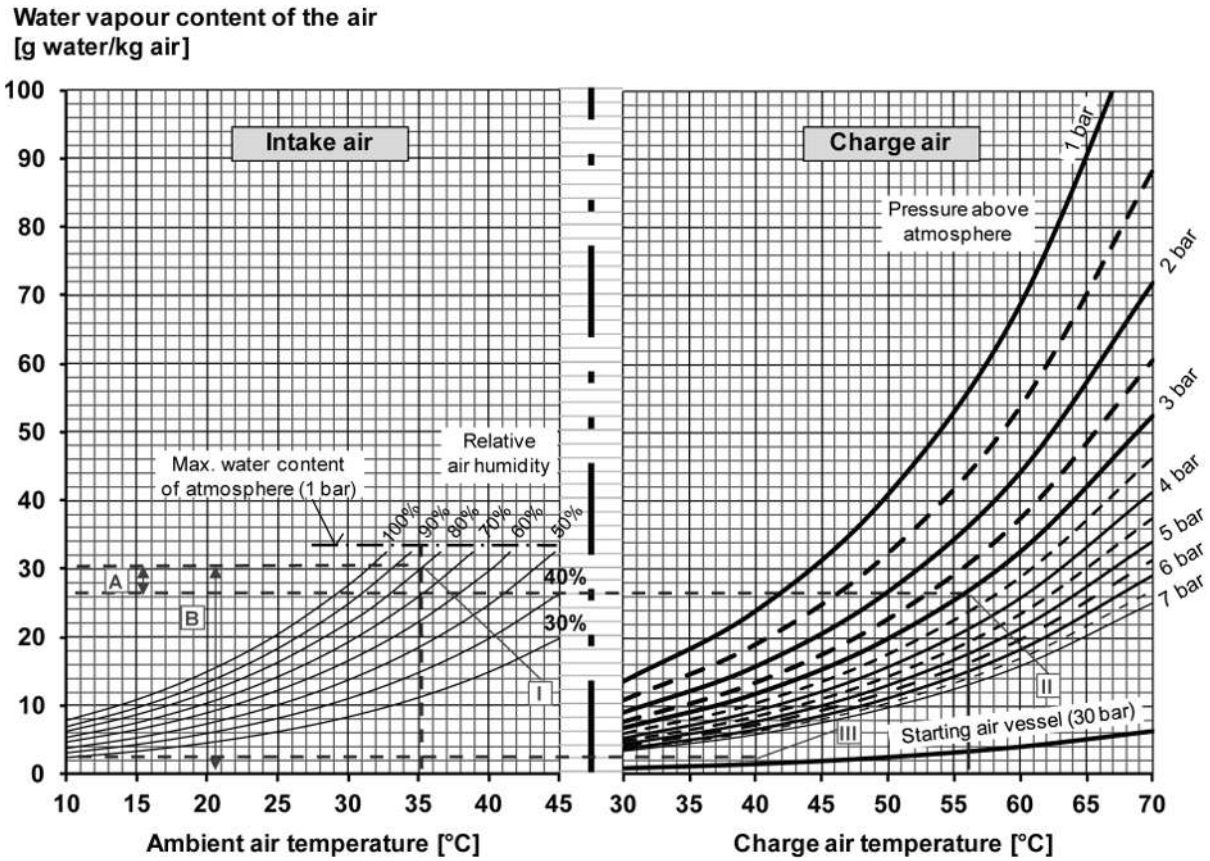

Figure 116: Diagram condensate amount

The amount of condensate precipitated from the air can be considerablly high, particularly in the tropics. It depends on the condition of the intake air (temperature, relative air humidity) in comparison to the charge air after charge air cooler (pressure, temperature).

It is important, that no condensed water of the intake air/charge air will be led to the compressor of the turbocharger, as this may cause damages.

In addition the condensed water quantity in the engine needs to be minimised. This is achieved by controlling the charge air temperature.

How to determine the amount of condensate:

First determine the point I of intersection in the left side of the diagram (intake air), see figure Diagram condensate amount, Page 301 between the corresponding relative air humidity curve and the ambient air temperature.

Secondly determine the point II of intersection in the right side of the diagram (charge air) between the corresponding charge air pressure curve and the charge air temperature. Note that charge air pressure as mentioned in section Planning data, Page 107 is shown as absolute pressure.

At both points of intersection read out the values [g water/kg air] on the vertically axis.

2025-06-16 - 1.0

The intake air water content I minus the charge air water content II is the condensate amount A which will precipitate. If the calculations result is negative no condensate will occur.

For an example see figure Diagram condensate amount, Page 301. Intake air water content 30 g/kg minus 26 g/kg = 4 g of water/kg of air will precipitate.

To calculate the condensate amount during filling of the starting air receiver just use the 30 bar curve (see figure Diagram condensate amount, Page 301) in a similar procedure.

Example how to determine the amount of water accumulating in the charge air pipe

Parameter	Unit	Value
Engine output (P)	kW	9,000
Specific air flow (le)	kg/kWh	6.9
Ambient air condition (I):		
Ambient air temperature	°C	35
Relative air humidity	%	80
Charge air condition (II):		
Charge air temperature after cooler[1)]	°C	56
Charge air pressure (over pressure)[1)]	bar	3.0
Solution according to above diagram		
Water content of air according to point of intersection (I)	kg of water/kg of air	0.030
Maximum water content of air according to point of intersection (II)	kg of water/kg of air	0.026
The difference between (I) and (II) is the condensed water amount (A) A = I – II = 0.030 – 0.026 = 0.004 kg of water/kg of air		
Total amount of condensate Q_A: Q_A = A x le x P Q_A = 0.004 x 6.9 x 9,000 = 248 kg/h		
[1)] In case of two-stage turbocharging choose the values of the high-pressure TC and cooler (second stage of turbocharging system) accordingly.		

Table 158: Example how to determine the amount of water accumulating in the charge air pipe

2025-06-16 - 1.0

Example how to determine the condensate amount in the starting air receiver

Parameter	Unit	Value
Volumetric capacity of tank (V)	litre m^3	3,500 3.5
Temperature of air in starting air receiver (T)	°C K	40 313
Air pressure in starting air receiver ($p_{above\ atmosphere}$) Air pressure in starting air receiver ($p_{absolute}$)	bar bar abs $\frac{N}{m^2}$	30 31 31×10^5
Gas constant for air (R)	$\frac{Nm}{kg \times K}$	287
Ambient air temperature	°C	35
Relative air humidity	%	80
Weight of air in the starting air receiver is calculated as follows: $m = \frac{p \times V}{R \times T} = \frac{31 \times 10^5 \times 3.5}{287 \times 313} = 121\,kg$		
Solution according to above diagram		
Water content of air according to point of intersection (I)	kg of water/kg of air	0.030
Maximum water content of air according to point of intersection (III)	kg of water/kg of air	0.002
The difference between (I) and (III) is the condensed water amount (B) B = I – III B = 0.030 – 0.002 = 0.028 kg of water/kg of air		
Total amount of condensate in the vessel (Q_B) Q_B = m x B Q_B = 121 x 0.028 = 3.39 kg		

Table 159: Example how to determine the condensate amount in the starting air receiver

5.3 Media interfaces

The following presentation of the media connection numbers is for orientation only.

Final drawings will follow as part of the project-specific execution.

Be aware that distinct media connection numbers are linked to optional engine features only.

2025-06-16 - 1.0

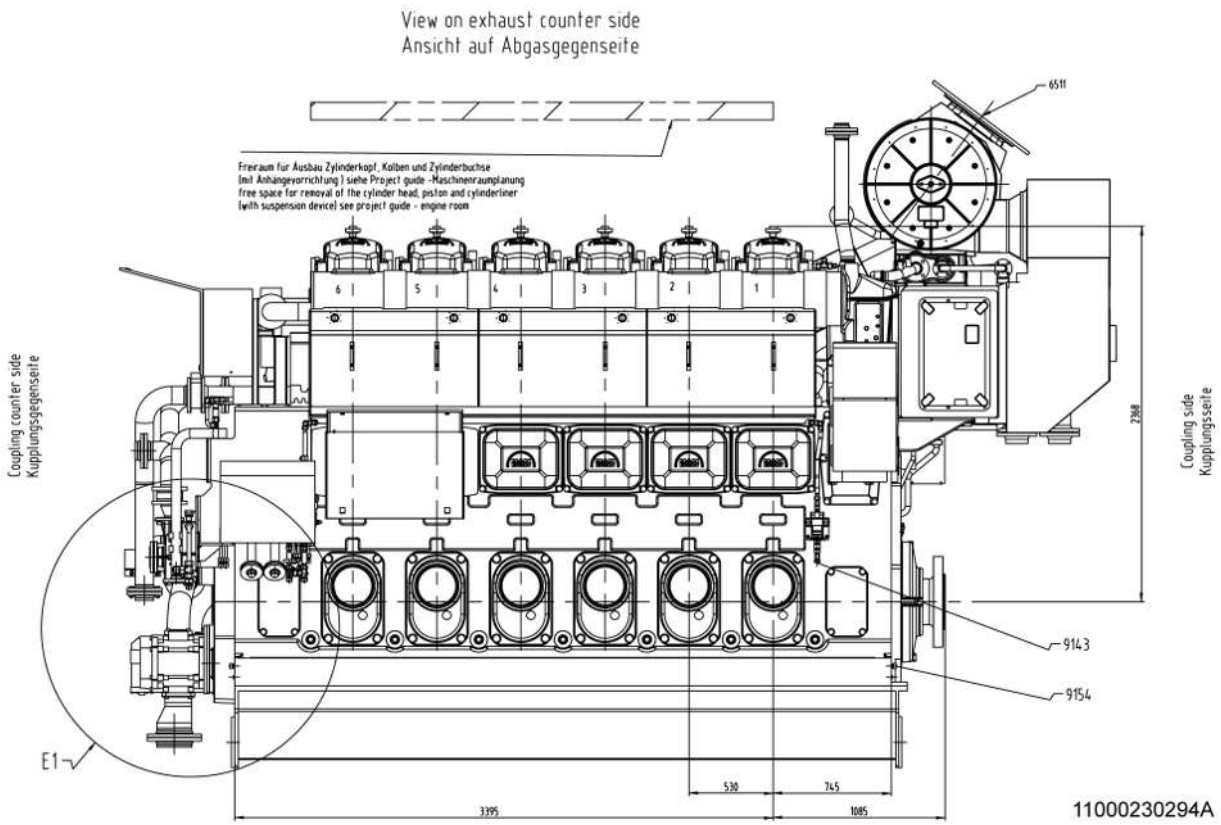

Figure 117: Media interfaces exemplary, side view on exhaust counter side

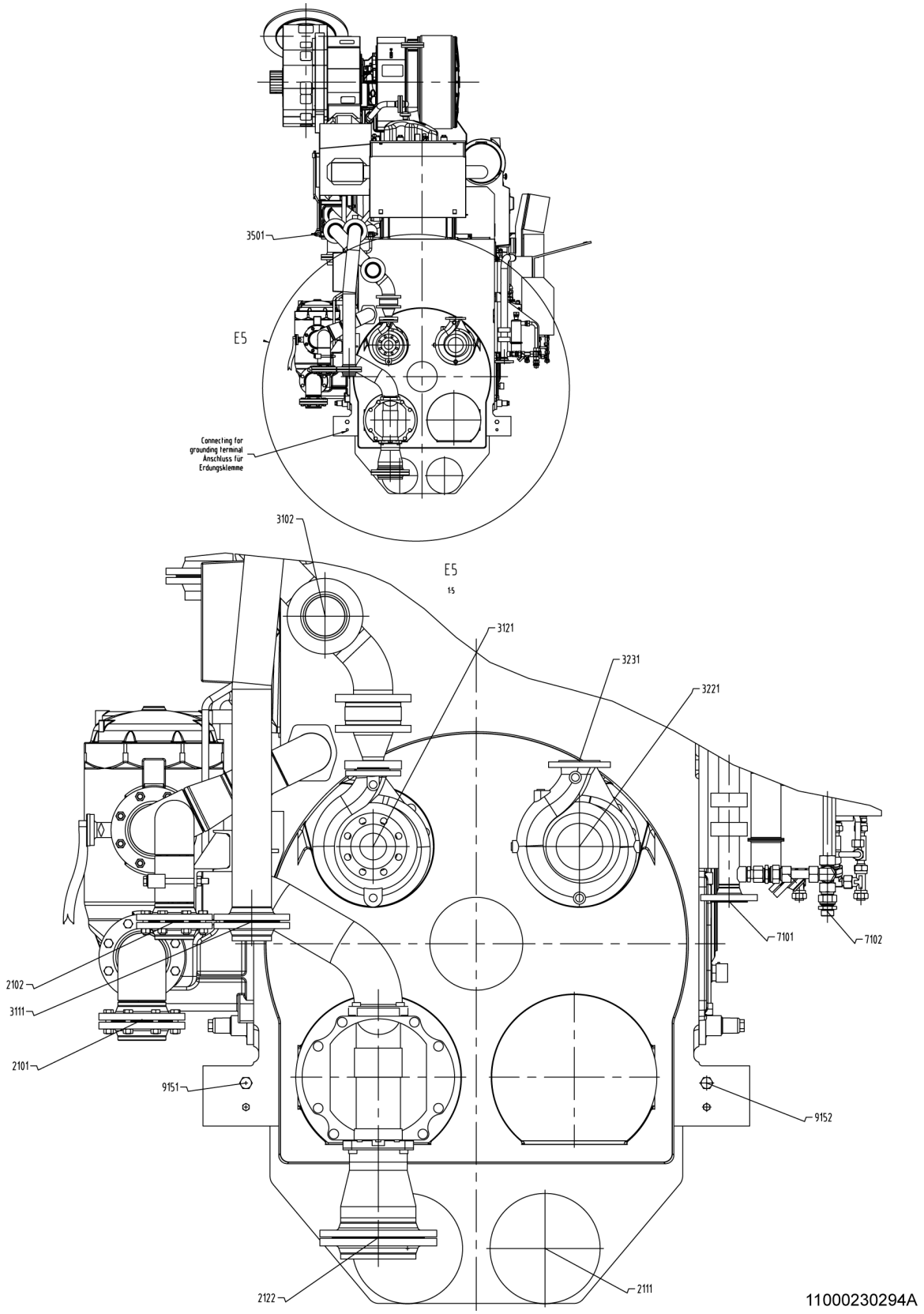

Figure 118: Media interfaces exemplary, front view counter coupling side

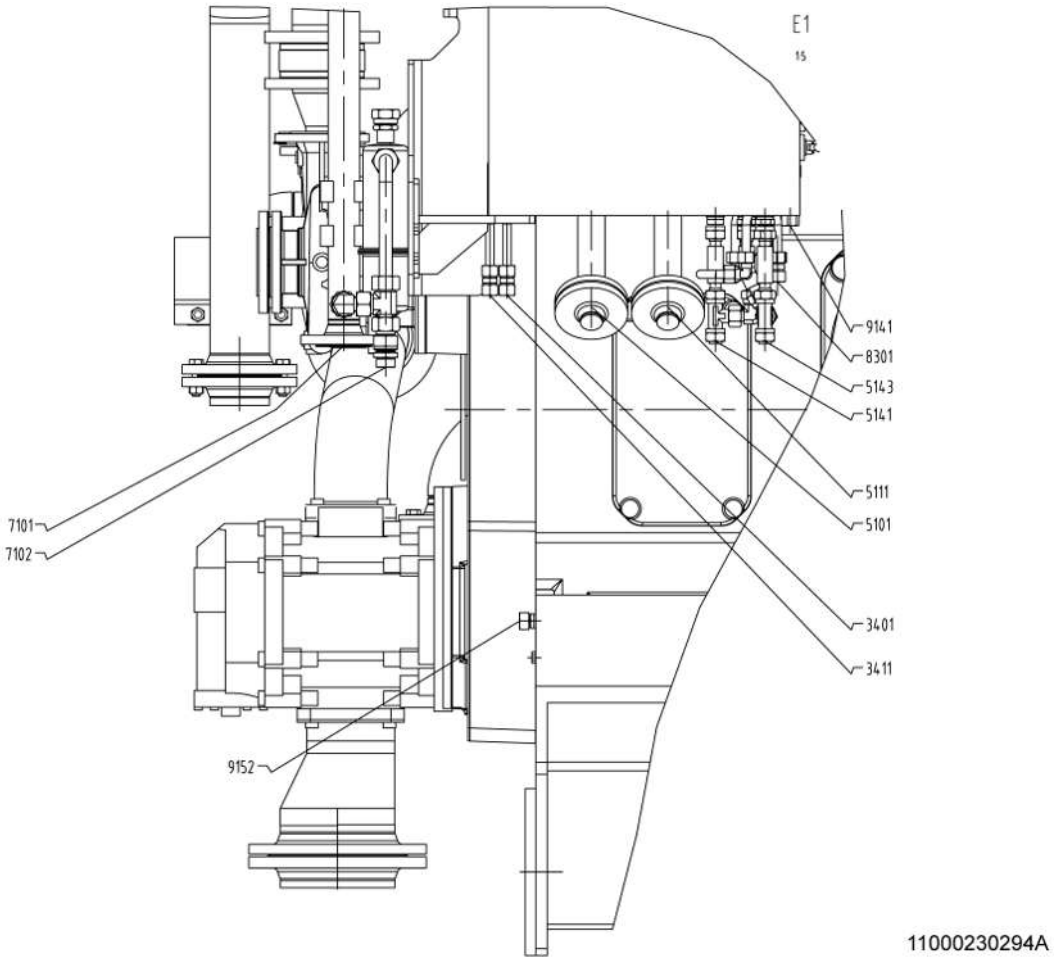

Figure 119: Media interfaces exemplary, counter coupling side – Side view on exhaust counter side

2025-06-16 - 1.0

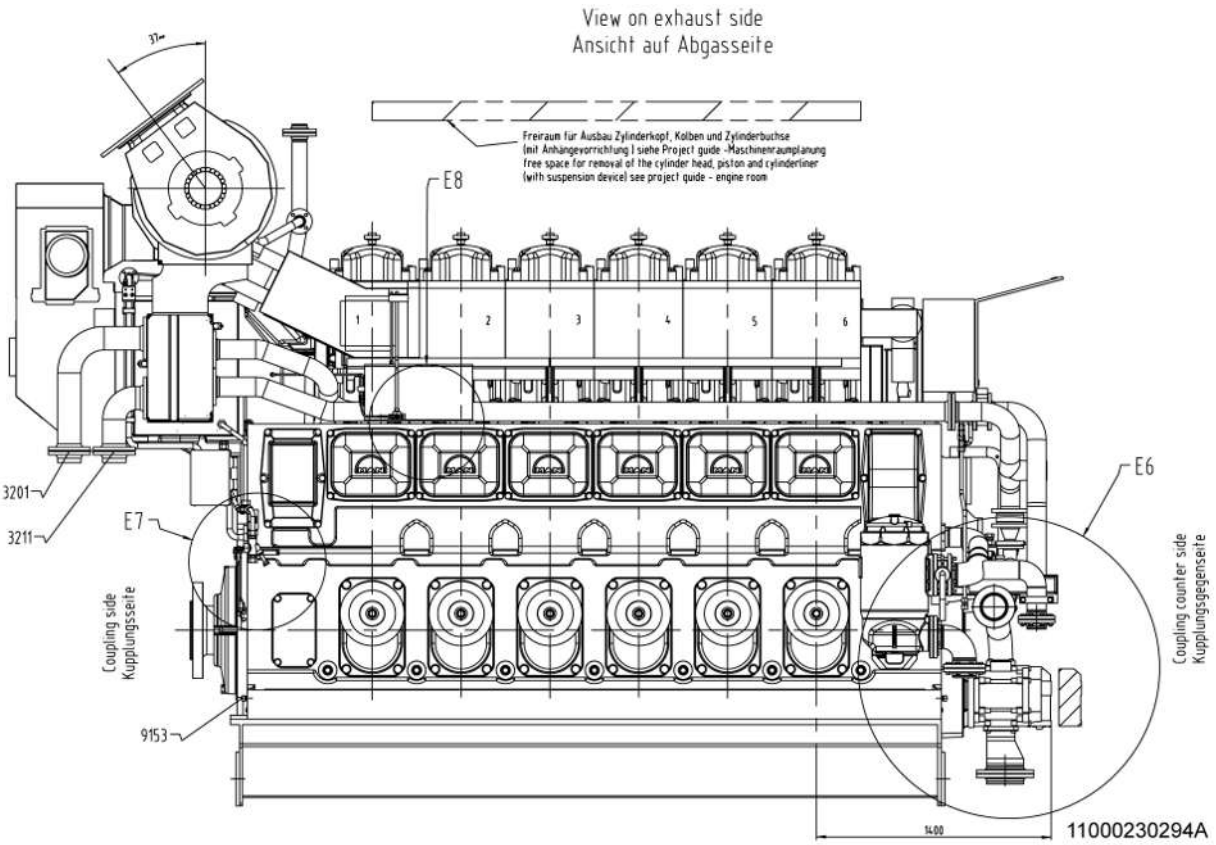

Figure 120: Media interfaces exemplary, side view on exhaust side

2025-06-16 - 1.0

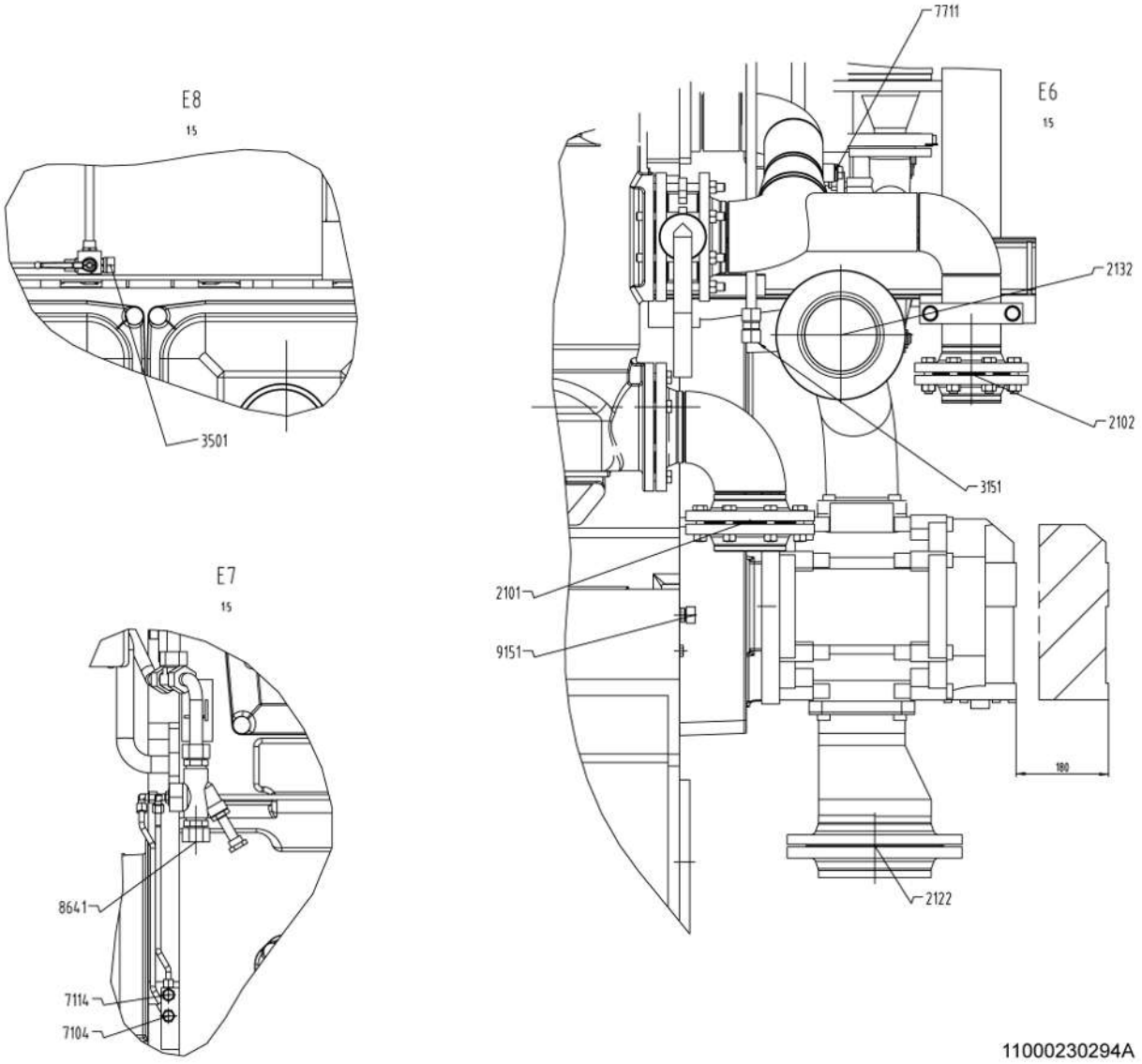

Figure 121: Media interfaces exemplary, counter coupling side – Side view on exhaust side

2025-06-16 - 1.0

Connection-No. Anschluss Nr.	X	Y	Z	Description of pipe connection Benennung des Rohranschlusses	Pipe dimension Rohrabmessung	Code for connection part Bezeichnung des Anschlusst.	Connection location Anschlussort	Flow direction Flussrichtung
2101	972.5	-221.5	-3532.5	Engine inlet Motoreintritt	StR 139,7x4	EN 1092-1/11 B1/ DN125/PN16/P245GH	Coupling counterside Kupplungsgegenseite	Inlet Eintritt
2102	878.0	64.0	-3963.0	Spare connection Reserveanschluss	StR 114,3x3,6	EN 1092-1/11 B1/ DN100/PN16/S235JRG2	Coupling counterside Kupplungsgegenseite	Inlet Eintritt
2111	-200.0	-886.0	-3395.0	Drain from oil pan Ablauf aus der Ölwanne	StR 219,1x6,3	DIN 2527-B200PN6-RSt37-2	Coupling counterside Kupplungsgegenseite	Outlet Austritt
2113	200.0	-886.0	791.0	Drain from oil pan Ablauf aus der Ölwanne	StR 219,1x6,3	DIN 2527-B200PN6-RSt37-2	Coupling side Kupplungsseite	Outlet Austritt
2114	-200.0	-886.0	791.0	Drain from oil pan Ablauf aus der Ölwanne	StR 219,1x6,3	DIN 2527-B200PN6-RSt37-2	Coupling side Kupplungsseite	Outlet Austritt
2122	285.0	-854.5	-3775.1	Oil pump inlet Ölpumpeneintritt	StR 219,1x6,3	EN 1092-1/11 D/ DN200/PN16/P245GH	Coupling counterside Kupplungsgegenseite	Inlet Eintritt
2132	840.5	140.2	-3709.0	Oil pump outlet Ölpumpenaustritt	StR 139,7x4	EN 1092-1/11 D/ DN125/PN16/P245GH	Coupling counterside Kupplungsgegenseite	Outlet Austritt
2841	85.0	2968.0	433.0	Oil mist pipe from eng. a. ventil. TC Öldunstl. vom Mot. u. Entlüftung TL	StR 88,9x3,2	EN 1092-1/01 A/ DN80/PN16/S235JRG2	Coupling side Kupplungsseite	Outlet Austritt
3102	439.9	952.4	-3967.0	Cooling water inlet Kühlwassereintritt	StR 114,3x3,6	EN 1092-1/11 B1/ DN100/PN16/S235JRG2	Coupling counterside Kupplungsgegenseite	Inlet Eintritt
3111	653.0	64.0	-3963.0	Engine outlet Motoraustritt	StR 114,3x3,6	EN 1092-1/11 B1/ DN100/PN16/S235JRG2	Coupling counterside Kupplungsgegenseite	Outlet Austritt
3121	300.0	282.7	-3930.0	HT cooling water inlet HT Kühlwassereintritt	StR 88,9x3,2	EN 1092-1/01 A/ DN80/PN16/S235JRG2	Coupling counterside Kupplungsgegenseite	Inlet Eintritt
3141	427.5	2166.0	322.0	Cylinder head vent Zylinderkopfentlüftung	StR 16x2	DIN 3861-S16-St DIN 3870-AS16	Coupling side Kupplungsseite	Outlet Austritt
3151	797.9	125.5	-3550.0	Drain of cooling water pipe Entleerung der Kühlwasserleitung	StR 20x2	DIN 2353-ES20-St	Coupling counterside Kupplungsgegenseite	Outlet Austritt
3201	777.5	1068.0	1806.5	Charge air cooling water Ladeluftkühlwasser	StR 139,7x4	EN 1092-1/11 D/ DN125/PN16/P245GH	Coupling side Kupplungsseite	Inlet Eintritt
3211	777.5	1068.0	1537.4	Charge air cooling water Ladeluftkühlwasser	StR 139,7x4	EN 1092-1/11 D/ DN125/PN16/P245GH	Coupling side Kupplungsseite	Outlet Austritt
3221	-300.0	282.7	-3905.0	LT cooling water inlet LT Kühlwassereintritt	StR 88,9x3,2	EN 1092-1/01 A/ DN80/PN16/S235JRG2	Coupling counterside Kupplungsgegenseite	Inlet Eintritt
3231	-300.0	532.7	-3805.0	LT cooling water outlet LT Kühlwasseraustritt	StR 76,1x2,9	DIN 2576-B65x76,1-RSt37-2	Coupling counterside Kupplungsgegenseite	Outlet Austritt
3401	-875.0	219.0	-3450.0	Engine inlet Motoreintritt	StR 16x2	DIN 2353-ES16-St	Coupling counterside Kupplungsgegenseite	Inlet Eintritt
3411	-842.0	219.0	-3483.0	Engine outlet Motoraustritt	StR 16x2	DIN 2353-ES16-St	Coupling counterside Kupplungsgegenseite	Outlet Austritt
3501	929.3	1275.0	-188.0	Turbine washing device Turbinenwascheinrichtung	16x2 DIN17456 X6CrNiTi 18 10	DIN 3861-S16-St DIN 3870-AS16	Coupling side Kupplungsseite	Inlet Eintritt
5101	-911.7	196.8	-3288.5	Engine inlet Motoreintritt	StR 42,4x2,6	EN 1092-1/11 C/ DN32/PN40/P245GH	Coupling counterside Kupplungsgegenseite	Inlet Eintritt
5111	-911.7	196.8	-3141.5	Engine outlet Motoraustritt	StR 42,4x2,6	EN 1092-1/11 C/ DN32/PN40/P245GH	Coupling counterside Kupplungsgegenseite	Outlet Austritt
5141	-939.5	131.0	-3050.5	Drain from the pressure pipe jacket Ablauf von der Druckrohrummantelung	StR 20x2	Lötkonus/solder cone R502-D20	Coupling counterside Kupplungsgegenseite	Outlet Austritt
5143	-1118.5	131.0	-2955.5	Leakage fuel drain Leckkraftstoffablauf	StR 20x2	Lötkonus/solder cone R502-D20	Coupling counterside Kupplungsgegenseite	Outlet Austritt
6511	1039.8	3061.5	1316.4	Exhaust gas outlet Abgasaustritt		DIN 86044-600	Coupling side Kupplungsseite	Outlet Austritt
7101	-735.0	123.0	-3763.0	Engine inlet Motoreintritt	StR 60,3x5	EN 1092-1/11 B1/ DN50/PN40/S235JRG2	Coupling counterside Kupplungsgegenseite	Inlet Eintritt
7102	-1021.5	93.0	-3683.0	Control air Steuerluft	StR 25x2	DIN 3861-S25-St DIN 3870-AS25-St	Coupling counterside Kupplungsgegenseite	Inlet Eintritt
7104	685.5	65.0	766.0	Control air inlet from turning gear Lufteintritt von Törnmaschinenverblockung	VA 10x1,5	DIN 2353-UL10-St	Coupling side Kupplungsseite	Inlet Eintritt
7114	685.5	106.0	766.0	Control air outlet to turning gear Luftaustritt zur Törnmaschinenverblockung	VA 10x1,5	DIN 2353-UL10-St	Coupling side Kupplungsseite	Outlet Austritt
7711	682.1	456.1	-3696.3	Control line to lube oil press. regul. valve Steueröl zum Druckregelventil	StR 16x2	R575-AG 3/4	Coupling counterside Kupplungsgegenseite	Outlet Austritt
8301	-1027.5	245.0	-2931.5	Trace heating Begleitheizung	StR 16x2	DIN 3861-S16-St DIN 3870-AS16	Coupling counterside Kupplungsgegenseite	Inlet Eintritt
8311	-989.5	245.0	-2931.5	Trace heating Begleitheizung	StR 16x2	DIN 3861-S16-St DIN 3870-AS16	Coupling counterside Kupplungsgegenseite	Outlet Austritt
8641	758.0	404.0	712.5	Condensed water drain Kondenswasserablauf	StR 25x2	DIN 2353-DS25B	Coupling side Kupplungsseite	Outlet Austritt
9141	-812.0	352.5	-2907.0	Leakage pipe from the crankcase Leckleitung vom Kurbelgehäuse	StR 16x2	DIN 2353-FFS16-St	Coupling counterside Kupplungsgegenseite	Outlet Austritt
9143	-813.0	246.5	278.5	Leakage pipe from the crankcase Leckleitung vom Kurbelgehäuse	StR 16x2	DIN 2353-FFS16-St	Coupling side Kupplungsseite	Outlet Austritt
9151	670.0	-405.0	-3426.0	Drain from the crankcase foot Ablauf vom Kurbelgehäusefuß	StR 18x1,5	DIN 2353-CL18-St	Coupling counterside Kupplungsgegenseite	Outlet Austritt
9152	-670.0	-405.0	-3426.0	Drain from the crankcase foot Ablauf vom Kurbelgehäusefuß	StR 18x1,5	DIN 2353-CL18-St	Coupling counterside Kupplungsgegenseite	Outlet Austritt
9153	670.0	-405.0	776.0	Drain from the crankcase foot Ablauf vom Kurbelgehäusefuß	StR 18x1,5	DIN 2353-CL18-St	Coupling side Kupplungsseite	Outlet Austritt
9154	-670.0	-405.0	776.0	Drain from the crankcase foot Ablauf vom Kurbelgehäusefuß	StR 18x1,5	DIN 2353-CL18-St	Coupling side Kupplungsseite	Outlet Austritt

11000230294A

Figure 122: Media interfaces exemplary – Legend

2025-06-16 - 1.0

5.4 Lube oil system

5.4.1 Internal lube oil system

As a standard:

- Engine equipment with attached lube oil pump

See overleaf

2025-06-16 - 1.0

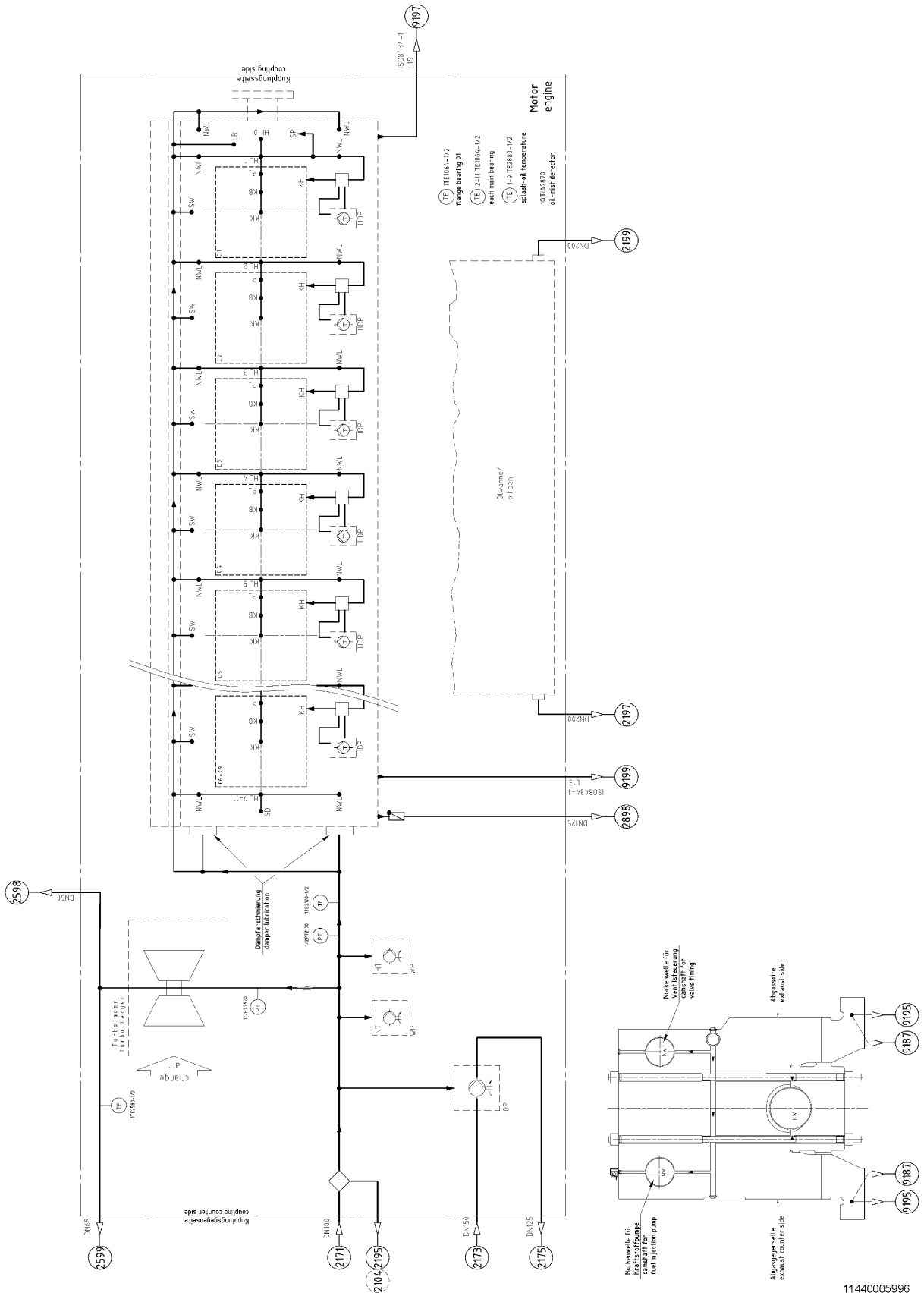
Motor
engine
Kupplungsseite
coupling side
Kupplungsgegenseite
coupling counter side
Turbolader
turbocharger
Ölwanne/
oil pan
Dampferschleierung
damper lubrication
Nockenwelle für Ventilsteuerung
camshaft for valve timing
Nockenwelle für Kraftstoffpumpe
camshaft for fuel injection pump
Abgasseite
exhaust side
Abgasgegenseite
exhaust counter side
11440005996

2025-06-16 - 1.0

Connection numbers

2104	Lube oil inlet to engine for provisional lubrication
2171	Lube oil inlet to engine
2173	Lube oil inlet to lube oil pump
2175	Lube oil outlet from lube oil pump
2195	Drain of run in oil filter
2197	Lube oil drain from oil pan, counter coupling side
2199	Lube oil drain from oil pan, coupling side
2598	Venting of turbocharger
2599	Lube oil outlet from turbocharger
2898	Venting of crankcase
9187	Dirty oil drain from crankcase foot, coupling side
9195	Dirty oil drain from crankcase foot, counter coupling side
9197	Dirty oil drain from pump bank 2
9199	Dirty oil drain from pump bank 1

Figure 123: Internal lube oil system – Exemplary

Note:
The drawing shows the basic internal media flow of the engine in general.
Project-specific drawings thereof don't exist.

5.4.2 External lube oil system – Description

The following description refers to the figure(s) Lube oil system diagram(s), Page 321, which represent the standard design of external lube oil service system.

The internal lubrication of the engine and the turbocharger is provided with a force-feed lubrication system.

The lubrication of the cylinder liners is designed as a separate system attached to the engine but served by the inner lubrication system.

In multi-engine plants, for each engine a separate lube oil system is required.

According to the required lube oil quality, see table Main fuel/lube oil type.

Requirements before commissioning of engine

The flushing of the lube oil system in accordance to the MAN Energy Solutions specification (see the relevant working instructions) demands before commissioning of the engine, that all installations within the system are in proper operation. Be aware that special installations for commissioning are required and the lube oil separator must be in operation from the very first phase of commissioning.

Contact MAN Energy Solutions or licensee if any uncertainties occur.

T-001/Lube oil service tank

The main purpose of the lube oil service tank is to separate air and particles from the lube oil, before pumping the lube oil to the engine. For the design of the service tank the class requirements have to be taken in consideration. For design requirements of MAN Energy Solutions see section External lube oil system – Lube oil service tank, Page 326.

H-002/Lube oil preheater

To fulfill the starting conditions (see section Starting conditions, Page 57) preheating of the lube oil in the lube oil frame tank is necessary. Therefore the preheater of the separator is often used. The preheater must be enlarged in size if necessary, so that it can heat up the content of the service tank to ≥ 40

2025-06-16 - 1.0

°C, within 4 hours. If engines have to be kept in stand-by mode, the lube oil of the corresponding engines always has to be in the temperature range of starting conditions. Means that also the maximum lube oil temperature limit should not be exceeded during engine start.

Suction pipes

Suction pipes must be installed with a steady slope and dimensioned for the total resistance (incl. pressure drop for suction filter) not exceeding the pump suction head. Before engine starts, venting of suction line must be warranted. Therefore the design of the suction line must be executed accordingly.

PSV-004/Lube oil non-return flap with integrated safety valve

A non-return flap must be installed close to the lube oil tank to prevent lube oil back flow when the engine has been shut off. This non-return flap must be by-passed by a safety valve to protect the pump against high pressure caused by momentary counter-rotation of the engine during shutdown. MAN Energy Solutions solution for these two requirements is a special non-return flap with integrated safety valve. If there is used a normal return flap, the line of the external safety valve should lead back into the lube oil tank submerged. The required opening pressure of the safety valve is approximately 0.4 bar.

FIL-004/Lube oil suction strainer

The lube oil suction strainer protects the lube oil pumps against larger dirt particles that may have accumulated in the tank. It is recommended to use a cone type strainer with a mesh size of 1.5 mm. Two manometers installed before and after the strainer indicate when manual cleaning of filter becomes necessary, which should preferably be done in port.

P-001/P-007/P-074/Lube oil pumps

For ships with more than one main engine additionally to the service pump a prelubrication pump P-007 for pre- and postlubrication is necessary. Dependent on the type of prelubrication pump, an orifice on the discharge side could be necessary, to comply with the required differential pressure over the pump, given by the pump manufacturer. For further information according that pump see section Planning data, Page 107 and paragraph Lube oil, Page 155. A main lube oil pump as spare is required to be on board according to class society.

For ships with a single main engine drive it is preferable to design the lube oil system with a combination of an engine driven lube oil service pump (attached) P-001 and a lube oil stand-by pump (free-standing) P-074 (100% capacity).

Additionally a prelubrication pump is recommended. If nevertheless the stand-by pump is used for pre- and postlubrication MAN Energy Solutions has to be consulted as there are necessary modifications in the engine automation.

The prelubrication pump must be located as low as possible and close to the lube oil service tank to prevent cavitation. The pressure drop in the piping must not exceed the suction capability of the pump. With adequate diameter, straight lines and short length the pressure drop can be kept low.

Using the stand-by pump for continuous prelubrication is not permissible.

2025-06-16 - 1.0

As long as the installed stand-by pump provides 100% capacity of the operating pump, the class requirement to have a spare part operating pump on board, is fulfilled. Both pumps must be located as low as possible and close to the lube oil service tank to prevent cavitation. The pressure drop in the piping must not exceed the suction capability of the pump. With adequate diameter, straight lines and short length the pressure drop can be kept low.

For design data of these lube oil pumps see section Planning data, Page 107 and the following.

In case of unintended engine stop (e.g. blackout) the postlubrication must be started as soon as possible (latest within 20 min) after the engine has stopped and must persist for 15 min.

This is required to cool down the bearings of turbocharger and hot inner engine components.

HE-002/Lube oil cooler

Dimensioning

Heat data, flow rates and tolerances are indicated in section Planning data, Page 107 and the following.

For the separator a heat-intake of 30 kJ/kWh was estimated.

On the lube oil side, the pressure drop shall not exceed 1.1 bar.

Design/Outfitting

The cooler installation must be designed for easy venting and draining.

TCV-001/Lube oil temperature control valve

The lube oil temperature control valve regulates the inlet oil temperature of the engine. The control valve is executed by wax-type thermostats.

Lube oil treatment

The treatment of the circulating lube oil can be divided into two major functions:

- Removal of contaminations to keep up the lube oil performance.
- Retention of dirt to protect the engine.

The removal of combustion residues, water and other mechanical contaminations is the major task of separators/centrifuges (CF-001) installed in by-pass to the main lube oil service system of the engine. The installation of a lube oil separator per engine is recommended to ensure a continuous separation during engine operation.

The lube oil filters integrated in the system protect the diesel engine in the main circuit retaining all residues which may cause a harm to the engine.

Depending on the filter design, the collected residues are to be removed from the filter mesh by automatic back flushing, manual cleaning or changing the filter cartridge. The retention capacity of the installed filter should be as high as possible.

When selecting an appropriate filter arrangement, the customer request for operation and maintenance, as well as the class requirements, have to be taken in consideration.

Instead of a separator an adequate filtration system (FIL-027) can be used for lube oil treatment. This is only valid for engines which operate with liquid fuels of DM- or DF-class (acc. ISO 8217) exclusively (also for dual fuel engines, no residual fuel). By using a filtration system, the used lube oil must be suitable

2025-06-16 - 1.0

for filtration. A separate heater to preheat the lube oil before engine start has to be foreseen. The filtration system must be approved by MAN Energy Solutions.

FIL-001/FIL-002 Arrangement principles for lube oil filters

Depending on engine type, the number of installed main engines in one plant and on the safety standard demanded by the customer, different arrangement principles for the filters FIL-001/FIL-002 are possible:

	Option 1		Option 2	
	FIL-001 automatic filter continous flushing	**FIL-002 duplex filter as indicator filter**	**FIL-001 automatic filter intermittent flushing**	**FIL-002 duplex filter as indicator filter**
FIL-001 includes second filter stage	Yes	-	No	-
Location	Engine room installed close to engine	Installed upstream of FIL-001	Engine room installed close to engine	Installed upstream of FIL-001
Requirement by-pass	Internal by-pass	-	Required	-
Requirement of FIL-002	To fulfill higher safety concept (optional)		Required	
Mesh width	34 µm first filter stage 80 µm second filter stage	60 µm	34 µm	60 µm
It is always recommended to install one separator in partial flow of each engine. Filter design has to be approved by MAN Energy Solutions.				

Table 160: Arrangement principles for lube oil filters

FIL-001/Lube oil automatic filter

The lube oil automatic filter is an automatic back washing filter installed as a main filter. The back washing/flushing of the filter elements has to be arranged in a way that lube oil flow and pressure will not be affected. The flushing discharge (oil sludge mixture) is led to the lube oil service tank. The oil will be permanently by-pass cleaned via suction line into a separator. This provides an efficient final removal of deposits (see section External lube oil system – Lube oil service tank, Page 326).

As state-of-the-art, lube oil automatic filter types are recommended to be equipped with an integrated second filtration stage. This second stage protects the engine from particles which may pass the first stage filter elements in case of any malfunction. If the lube oil system is equipped with a two-stage automatic filter, additional lube oil duplex filter FIL-002 can be avoided. As far as the automatic filter is installed without any additional filters downstream before the engine inlet, the filter has to be installed as close as possible to the engine (see table Arrangement principles for lube oil filters, Page 315). In that case the pipe section between filter and engine inlet must be closely inspected before installation. This pipe section must be divided and flanges have to be fitted so that all bends and welding seams can be inspected and cleaned prior to final installation.

2025-06-16 - 1.0

Differential pressure gauges have to be installed to protect the filter cartridges and to indicate clogging condition of the filter. A high differential pressure has to be indicated as an alarm.

In case filter stage 1 is not working sufficiently, the engine can run in emergency operation for maximum 72 hours with the second filter stage, but has to be stopped after. This measure ensures that disturbances in backwashing do not result in a complete failure of filtering and that the main stream filter can be cleaned without interrupting filtration.

FIL-002/Lube oil duplex filter as indicator filter

The lube oil duplex filter has the function of an indicator filter and must be cleaned manually. It must be installed downstream of the lube oil automatic filter, as close as possible to the engine. The pipe section between filter and engine inlet must be closely inspected before installation. This pipe section must be divided and flanges have to be fitted so that all bends and welding seams can be inspected and cleaned prior to final installation. In case of a two-stage automatic filter, the installation of a duplex filter can be avoided. Customers who want to fulfil a higher safety level, are free to mount an additional duplex filter close to the engine.

The lube oil duplex filter protects the engine also in case of malfunctions of the lube oil automatic filter. The monitoring system of the automatic filter generates an alarm signal to alert the operating personnel. A maintenance of the automatic filter becomes necessary. For this purpose the lube oil flow through the automatic filter has to be stopped. Single-main engine plants may continue to stay in operation by by-passing the automatic filter. Lube oil can still be filtrated sufficiently in this situation by only using the duplex filter.

In multi-engine-plants, where it is not possible to by-pass the lube oil automatic filter without loss of lube oil filtration, the affected engine has to be stopped in this situation.

The design of the lube oil duplex filter must ensure that no parts of the filter can become loose and enter the engine.

The drain connections equipped with shut-off fittings in the two chambers of the lube oil duplex filter returns into the leakage oil collecting tank (T-006). Draining will remove the dirt accumulated in the casing and prevents contamination of the clean oil side of the filter. Please check also table Arrangement principles for lube oil filters, Page 315.

Indication and alarm of filters

The lube oil automatic filter FIL-001 and the lube oil duplex filter FIL-002 are equipped with local visual differential pressure indicators and additionally with differential pressure switches. The switches are used for pre-alarm and main alarm.

2025-06-16 - 1.0

Differential pressure between filter inlet and outlet (dp)	Lube oil automatic filter FIL-001		Lube oil duplex filter FIL-002
	Intermittent flushing	Continuous flushing	
dp switch with lower set point is active	This dp switch has to be installed twice if an intermittent flushing filter is used. The first switch is used for the filter control; it will start the automatic flushing procedure. The second switch is adjusted at the identical set point as the first. Once the second switch is activated, and after a time delay of approximately 3 minutes, the dp pre-alarm "filter is polluted" is generated. The time delay becomes necessary to effect the automatic flushing procedure before and to evaluate its effect.	The dp pre-alarm: "Filter is polluted" is generated immediately	
dp switch with higher set point is active	The dp main alarm "filter failure" is generated immediately. If the main alarm is still active after 30 min, the engine output power will be reduced automatically.		

Table 161: Indication and alarm of filters

CF-001/Lube oil separator

The lube oil is intensively cleaned by separation in the by-pass thus relieving the filters and allowing an economical design.

The lube oil separator should be of the self-cleaning type. The design is to be based on a lube oil quantity of 1.0 l/kW. This lube oil quantity should be cleaned within 24 hours at:

- HFO-operation 6–7 times
- DMB-operation 4–5 times

The formula for determining the separator flow rate (Q) is:

$$Q = \frac{1.0 \times P \times n}{24}$$

Q [l/h]	Separator flow rate
P [kW]	Total engine output
n	5 for DMA/DMB 5 for (+ DMA/DMB for ignition only)

With the evaluated flow rate the size of separator has to be selected according to the evaluation table of the manufacturer. The separator rating stated by the manufacturer should be higher than the flow rate (Q) calculated according to the formula above.

Separator equipment

The lube oil preheater H-002 must be able to heat the oil to 95°C and the size is to be selected accordingly. In addition to a PI-temperature control, which avoids a thermal overloading of the oil, silting of the preheater must be prevented by high turbulence of the oil in the preheater.

Control accuracy ±1°C.

Cruise ships operating in arctic waters require larger lube oil preheaters. In this case the size of the preheater must be calculated with a Δt of 60 K.

The freshwater supplied must be treated as specified by the separator supplier.

2025-06-16 - 1.0

The supply pumps shall be of the free-standing type, i.e. not mounted on the separator and are to be installed in the immediate vicinity of the lube oil service tank.

This arrangement has three advantages:

- Suction of lube oil without causing cavitation.
- The lube oil separator does not need to be installed in the vicinity of the service tank but can be mounted in the separator room together with the fuel oil separators.
- Better matching of the capacity to the required separator throughput.

As a reserve for the lube oil separator, the use of the diesel fuel oil separator is admissible. For reserve operation the diesel fuel oil separator must be converted accordingly. This includes the pipe connection to the lube oil system which must not be implemented with valves or spectacle flanges. The connection is to be executed by removable change-over joints that will definitely prevent DMB from getting into the lube oil circuit. See also rules and regulations of classification societies.

FIL-027/Lube oil fine filter

The lube oil is intensively cleaned by fine filtration in the by-pass thus relieving the main filters and allowing an economical design.

The lube oil fine filter is not of self-cleaning type, therefore the filter elements need to be replaced. The design is to be based on a lube oil quantity of 1.0 l/kW. This lube oil quantity should be cleaned within 24 hours at:

- Liquid fuels of DM- and DF-class operation 4 – 5 times
- Dual fuel engines operating on (+MDO/MGO for ignition only) 4 – 5 times

The formula for determining the fine filter flow rate (Q) is:

$$Q = \frac{1.0 \times P \times n}{24}$$

Q [l/h]	Fine filter flow rate
P [kW]	Total engine output
n	5 for MDO/MGO 5 for (+ MDO/MGO for ignition only)

With the evaluated flow rate and the lube oil volume of the engine, the number of filter elements of the fine filter has to be selected according to the evaluation table of the maker. The table per maker is based on a fixed filter life time stated in the table (filter lifetime in engine operating hours). This has to be considered carefully. For a longer filter exchange interval, the number of filter elements has to be increased.

The information regarding released manufacturers and filter types for lube oil fine filters can be found here: https://www.man-es.com/documentation/lube-oil-treatment.

Fine filter equipment

Depending on the size of the fine filter, a lifting possibility above the filter housing can be necessary for filter exchange.

The supply pump shall be of freestanding type, that is not mounted on the same frame as the fine filter. It is to be installed in the immediate vicinity of the lube oil service tank.

2025-06-16 - 1.0

This arrangement has three advantages:

- Suction of lube oil without causing cavitation.
- The lube oil fine filter does not need to be installed near of the service tank. It can be mounted in one room together with the fuel oil filters or separators.
- Better accessibility of lube oil fine filter for filter exchange.

As a reserve for the lube oil fine filter, the use of the diesel fuel oil separator is admissible. For reserve operation, the diesel fuel oil separator must be converted accordingly. This includes the pipe connection to the lube oil system which must not be implemented with valves or spectacle flanges. The connection is to be executed by removable changeover joints that will definitely prevent MDO from getting into the lube oil circuit. See also rules and regulations of classification societies.

PCV-007/Pressure relief valve

By use of the pressure relief valve, a constant lube oil pressure before the engine is adjusted.

The pressure relief valve is installed upstream of the lube oil cooler. By spilling off exceeding lube oil quantities upstream of the major components these components can be sized smaller. The return pipe (spilling pipe) from the pressure relief valve returns into the lube oil service tank.

The control line of the pressure relief valve has to be connected to the engine inlet. In this way the pressure losses of filters, pipes and cooler are compensated automatically.

TR-001/Condensate trap

See section Crankcase vent and lube oil tank vent, Page 332.

T-006/Leakage oil collecting tank

See section External fuel system – Heavy fuel oil (HFO) supply system, Page 382.

Withdrawal points for samples

Points for drawing lube oil samples are to be provided upstream and downstream of the filters and the separator, to verify the effectiveness of these system components.

Piping system

It is recommended to use pipes according to the pressure class PN16.

P-012/Lube oil transfer pump

The lube oil transfer pump supplies fresh oil from the lube oil storage tank to the operating tank. Starting and stopping of the lube oil transfer pump should preferably be done automatically by float switches fitted in the tank.

P-075/Cylinder lube oil pump

The engine is equipped with an electrically driven lube oil pump (P-075), supplying extra lubricant to the pistons and cylinder liners to handle specific demands.

2025-06-16 - 1.0

5.4 Lube oil system

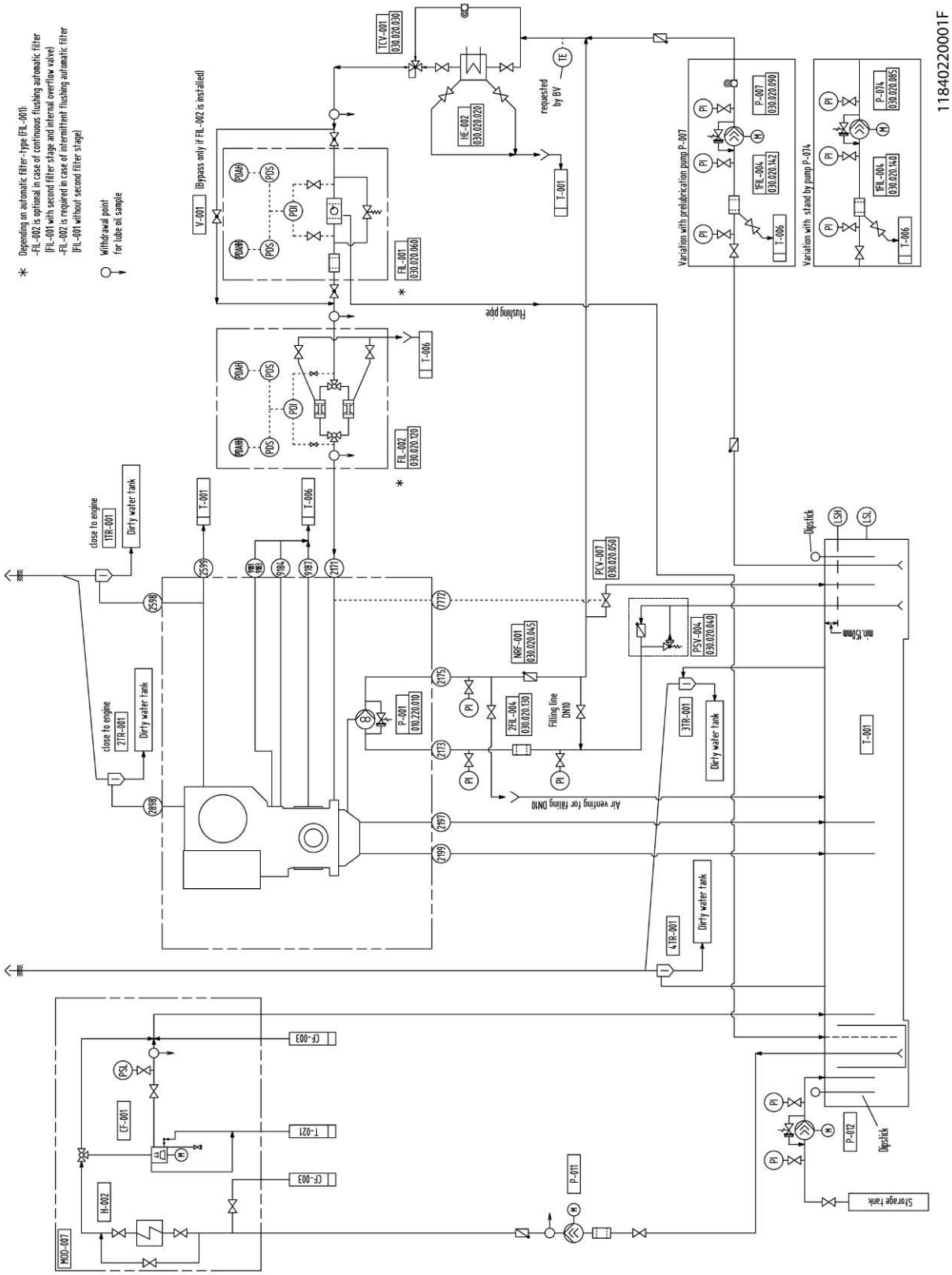

2025-06-16 - 1.0

	Components
CF-001	Lube oil separator
CF-003	Diesel fuel oil separator
FIL-001	Lube oil automatic filter
FIL-002	Lube oil duplex filter
1,2 FIL-004	Lube oil suction strainer
H-002	Lube oil preheating unit
HE-002	Lube oil cooler
MOD-007	Lube oil separator module
NRF-001	Lube oil non-return flap
P-001	Lube oil service pump, attached
P-007	Prelubrication pump
	Major GenSet connections
2171	Lube oil inlet to engine
2173	Lube oil inlet to lube oil pump 1
2175	Lube oil outlet from lube oil pump 1
2197	Lube oil drain from oil pan, counter coupling side 1
2199	Lube oil drain from oil pan, coupling side 1
2598	Venting of turbocharger 1
P-011	Lube oil feed pump separator
P-012	Lube oil transfer pump
P-074	Lube oil stand-by pump, free-standing
PCV-007	Lube oil pressure relief valve
PSV-004	Lube oil non-return flap with integrated safety valve
T-001	Lube oil service tank
T-006	Leakage oil collecting tank
T-021	Sludge tank
TCV-001	Lube oil temperature control valve
1,2,3,4 TR-001	Condensate trap, lube oil system
V-001	Lead sealed globe valve, bypass to lube oil main filter
2599	Lube oil drain from turbocharger 1
2898	Venting of crankcase 1
7772	Control oil outlet to pressure control valve
9181/9183 9184	Dirty oil drain from crankcase
9187	Dirty oil drain from crankcase foot, coupling side 1

Figure 124: Lube oil system diagram

5.4.3 External lube oil system – Low-speed operation lube oil system

In case the engine is operated below 60 % of nominal speed, the following items have to be taken in account:

- Lube oil flow has to be maintained above minimum flow rate, given in section Planning data, Page 107.
- Lube oil pressure at the engine inlet has to be kept above the minimum pressure given in section Planning data, Page 107.

The attached lube oil pump may fall below the required performance data, therefore we recommend using an electrical driven service support pump (P-090).

For installation of the pump see figure Lube oil system diagram – Low-speed operation, Page 323.

Performance data for the pump are given in section Service support pumps for lower speed range of FPP applications, Page 106.

In order to cover operation during blackout, we recommend connecting the pump to the emergency power grid (switch over from standard net to emergency grid in case of blackout).

For installation of the service support pump and further details contact MAN Energy Solutions or licensee.

2025-06-16 - 1.0

5.4 Lube oil system

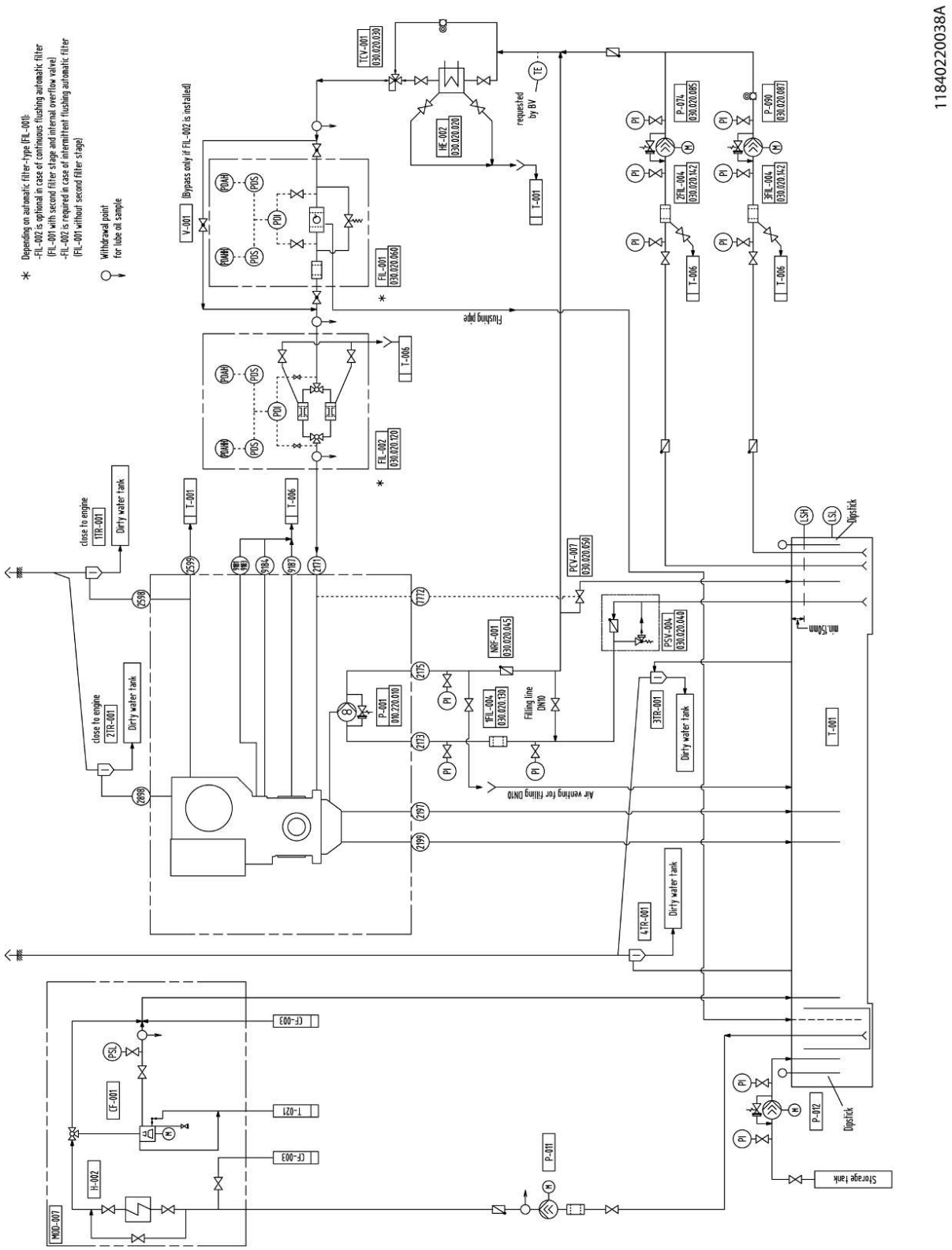

	Components
CF-001	Lube oil separator
CF-003	Diesel fuel oil separator
FIL-001	Lube oil automatic filter
FIL-002	Lube oil duplex filter
1,2,3 FIL-004	Lube oil suction strainer
H-002	Lube oil preheating unit
HE-002	Lube oil cooler
MOD-007	Lube oil separator module
NRF-001	Lube oil non-return flap
P-001	Lube oil service pump, attached
P-011	Lube oil feed pump separator
	Major GenSet connections
2171	Lube oil inlet to engine
2173	Lube oil inlet to lube oil pump 1
2175	Lube oil outlet from lube oil pump 1
2197	Lube oil drain from oil pan, counter coupling side 1
2199	Lube oil drain from oil pan, coupling side 1
2598	Venting of turbocharger 1
P-012	Lube oil transfer pump
P-074	Lube oil stand-by pump, free-standing
P-090	Lube oil service support pump
PCV-007	Lube oil pressure relief valve
PSV-004	Lube oil non-return flap with integrated safety valve
T-001	Lube oil service tank
T-006	Leakage oil collecting tank
T-021	Sludge tank
TCV-001	Lube oil temperature control valve
1,2,3,4 TR-001	Condensate trap, lube oil system
V-001	Lead sealed globe valve, bypass to lube oil main filter
2599	Lube oil drain from turbocharger 1
2898	Venting of crankcase 1
7772	Control oil outlet to pressure control valve
9181/9183 9184	Dirty oil drain from crankcase
9187	Dirty oil drain from crankcase foot, coupling side 1

Figure 125: Lube oil system diagram – Low-speed operation

5.4.4 External lube oil system – Prelubrication/postlubrication

Prelubrication

The prelubrication pump must be switched on at least 5 minutes before engine start. The prelubrication pump serves to assist the engine attached main lube oil pump, until this can provide a sufficient flow rate.

For design data of the prelubrication pump see section Planning data, Page 107 and paragraph Lube oil, Page 155.

During the starting process, the maximal temperature mentioned in section Starting conditions, Page 57 must not be exceeded at engine inlet. Therefore, a small LT cooling waterpump can be necessary if the lube oil cooler is served only by an attached LT pump.

Postlubrication

The prelubrication pump is also to be used for postlubrication after the engine is turned off.

Postlubrication is effected for a period of 15 minutes.

2025-06-16 - 1.0

5.4.5 External lube oil system – Lube oil outlets

Lube oil drain

Two connections for oil drain pipes are located on both ends of the engine oil sump.

For an engine installed in the horizontal position, two oil drain pipes are required, one at the coupling end and one at the free end.

If the engine is installed in an inclined position, three oil drain pipes are required, two at the lower end and one at the higher end of the engine oil sump.

The drain pipes must be kept short. The slanted pipe ends must be immersed in the oil, so as to create a liquid seal between crankcase and tank.

Expansion joints

At the connection of the oil drain pipes to the lube oil service tank, expansion joints are required.

Shut-off butterfly valves

If for lack of space, no cofferdam can be provided underneath the service tank, it is necessary to install shut-off butterfly valves in the drain pipes. If the ship should touch ground, these butterfly valves can be shut via linkages to prevent the ingress of seawater through the engine.

Drain pipes, shut-off butterfly valves with linkages, expansion joints, etc. are not supplied by the engine builder.

2025-06-16 - 1.0

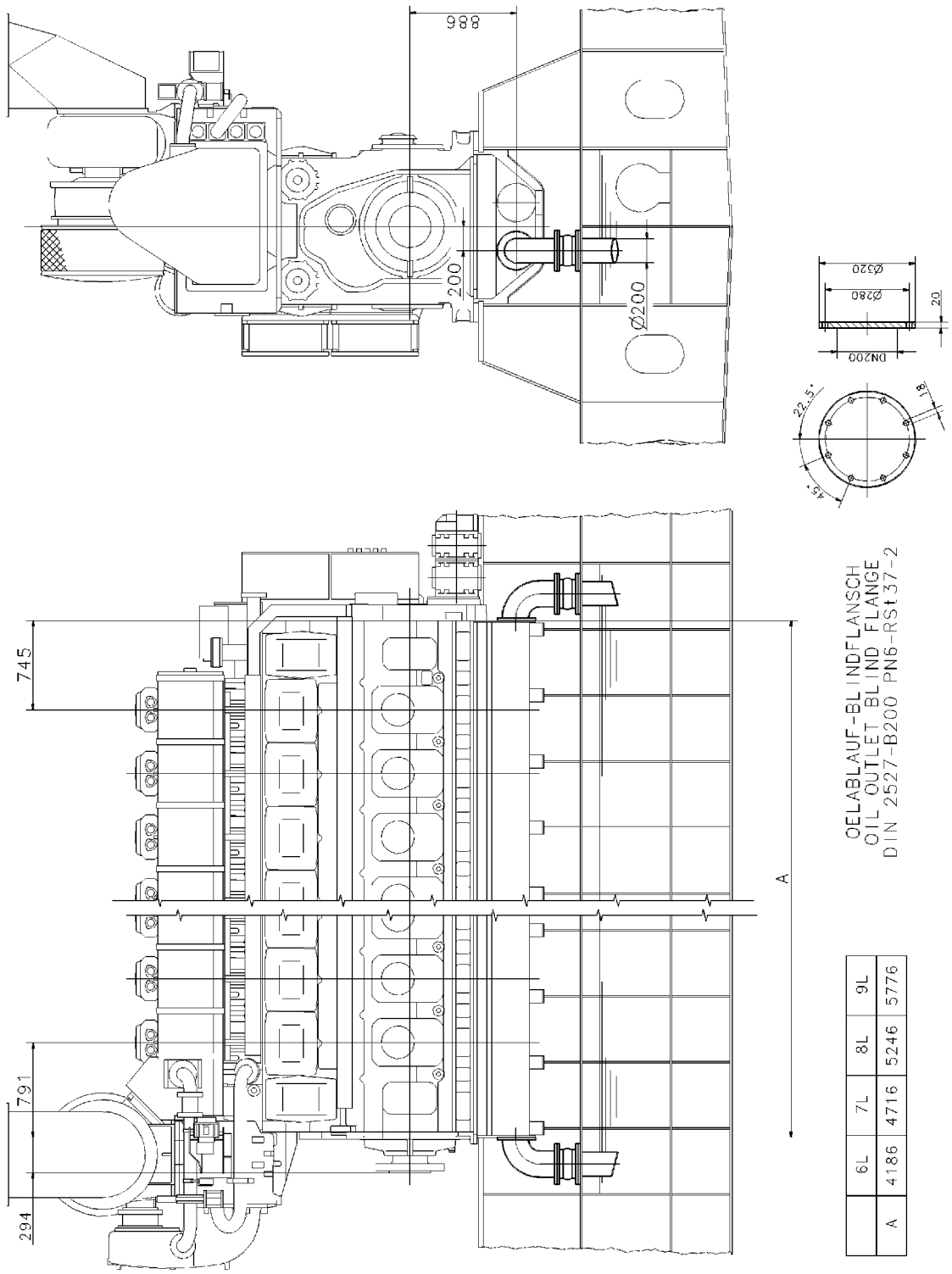

Figure 126: Lube oil outlets L engine (rigidly mounted engines)

2025-06-16 - 1.0

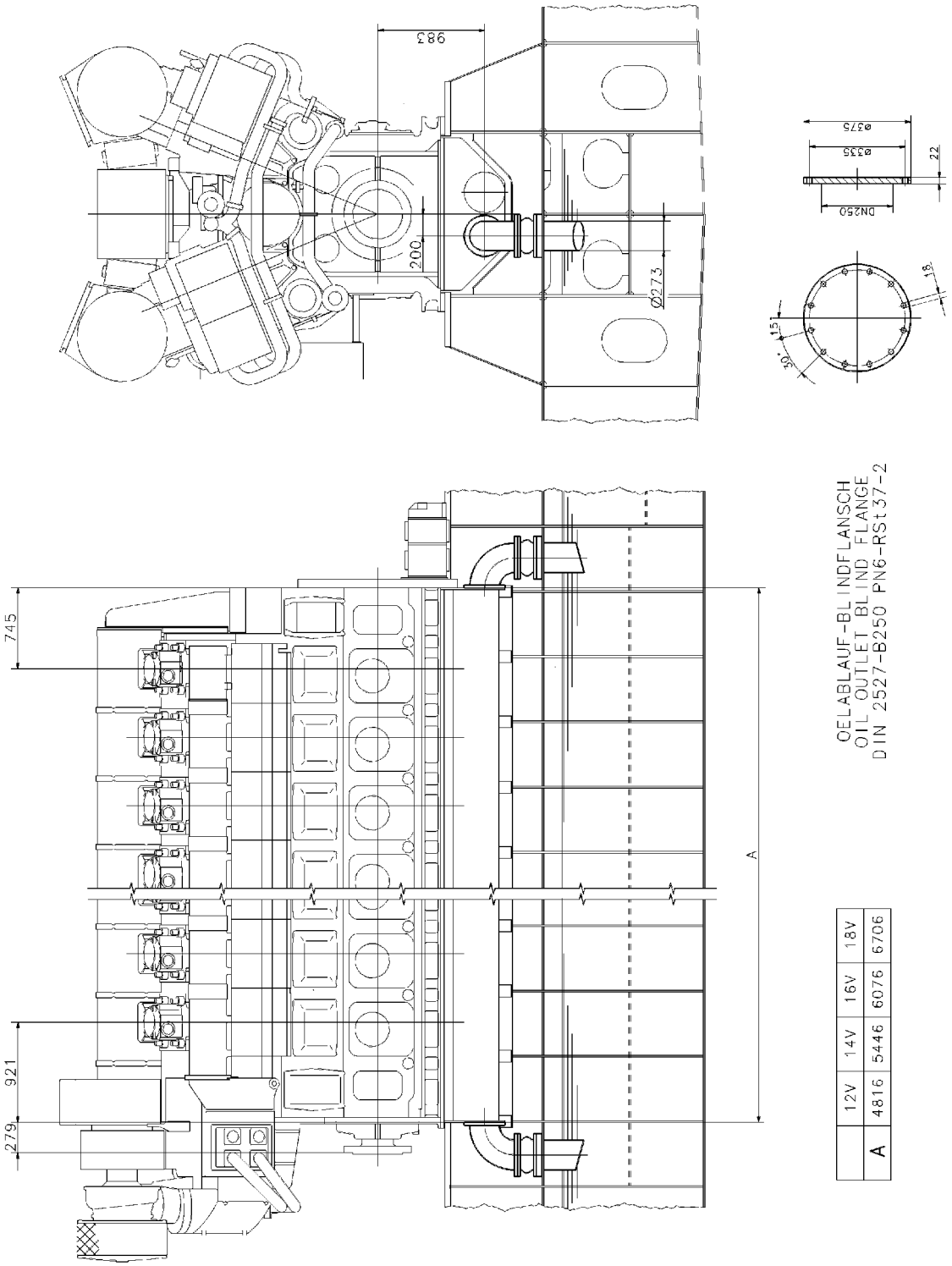

Figure 127: Lube oil outlets V engine (rigidly mounted engines)

5.4.6 External lube oil system – Lube oil service tank

The lube oil service tank is to be arranged over the entire area below the engine. To ensure uniform vertical thermal expansion of the whole engine foundation.

To provide for adequate degassing, a minimum distance of 150 mm is required between tank top and the highest operating level (high-level alarm). The low oil level (low-level alarm) shall still permit the lube oil to be drawn in free of air, if the ship is moving maximum according to the classification society rules (pitching and rolling).

Depending on the design of the lube oil service tank, a well or a central suction is the preferred solution.

The minimum quantity for a proper engine operation is 1.0 l/kW (quantity of lube oil circulation). This is a theoretical factor for permanent lube oil quality control. It is the decisive factor for the design of the by-pass cleaning. The lube oil quantity, which is required during operation, depends on the tank geometry and the volume of the system (piping, system components), and may exceed the theoretical quantity of 1.0 l/kW to be topped up. The low-level alarm in the service tank is to be adjusted to a height, which ensures that the pumps can draw in oil, free of air, at the inclinations according to the classification society but min. 0.7 l/kW.

To ensure an adequate degassing of air out of the lube oil, the arrangement of the suction pipes to the engine and the drain pipes extending from the engine oil sump are to be selected in a way that the oil will remain for the longest possible time in the lube oil service tank. The maximum flow rates must be considered.

The manholes in the floor plates inside the service tank are to be arranged so as to ensure sufficient flow to the suction pipe of the pump also at low lube oil service level.

Vent the tank at both ends, according to section Crankcase vent and lube oil tank vent, Page 332.

2025-06-16 - 1.0

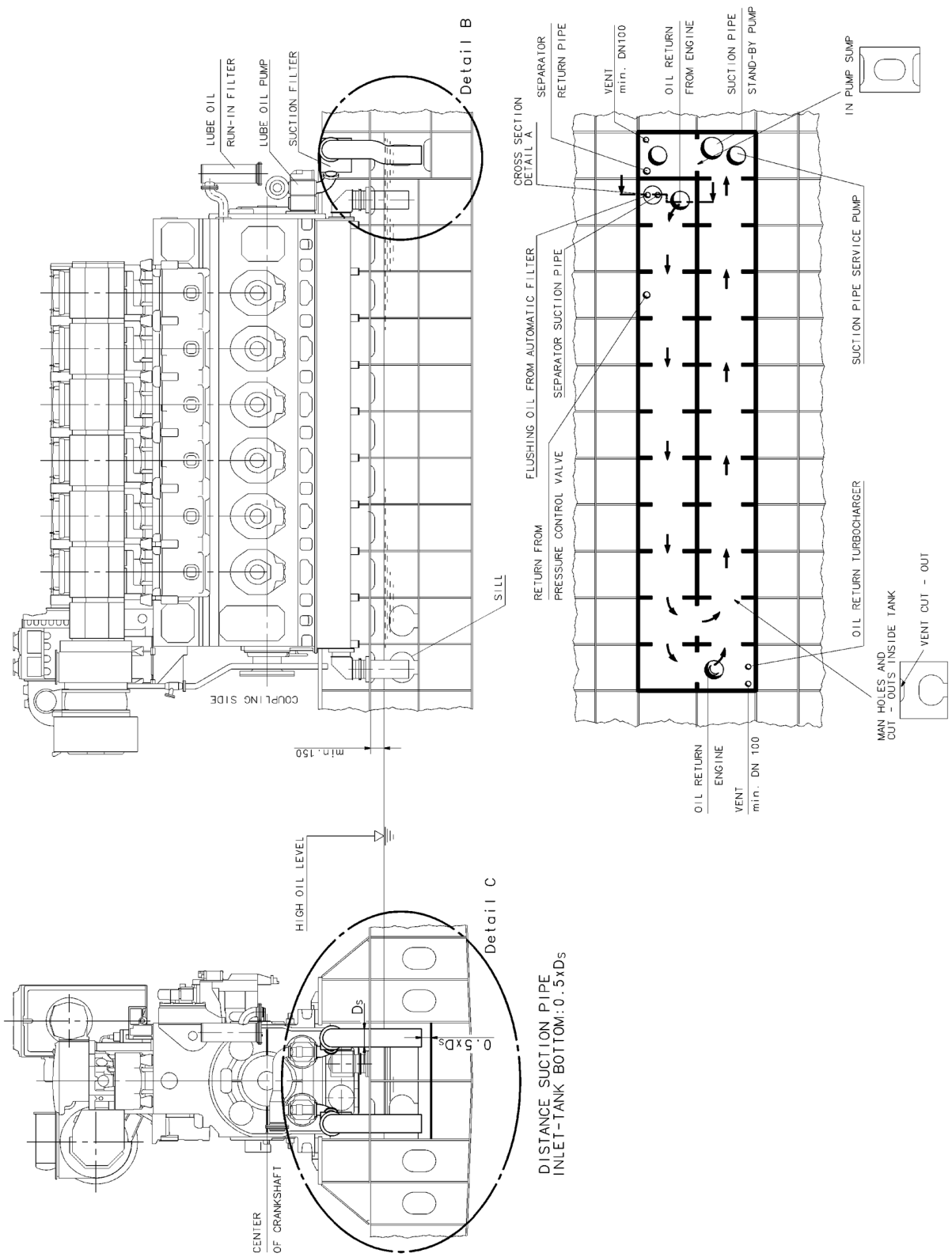

Figure 128: Example: Lube oil service tank

2025-06-16 - 1.0

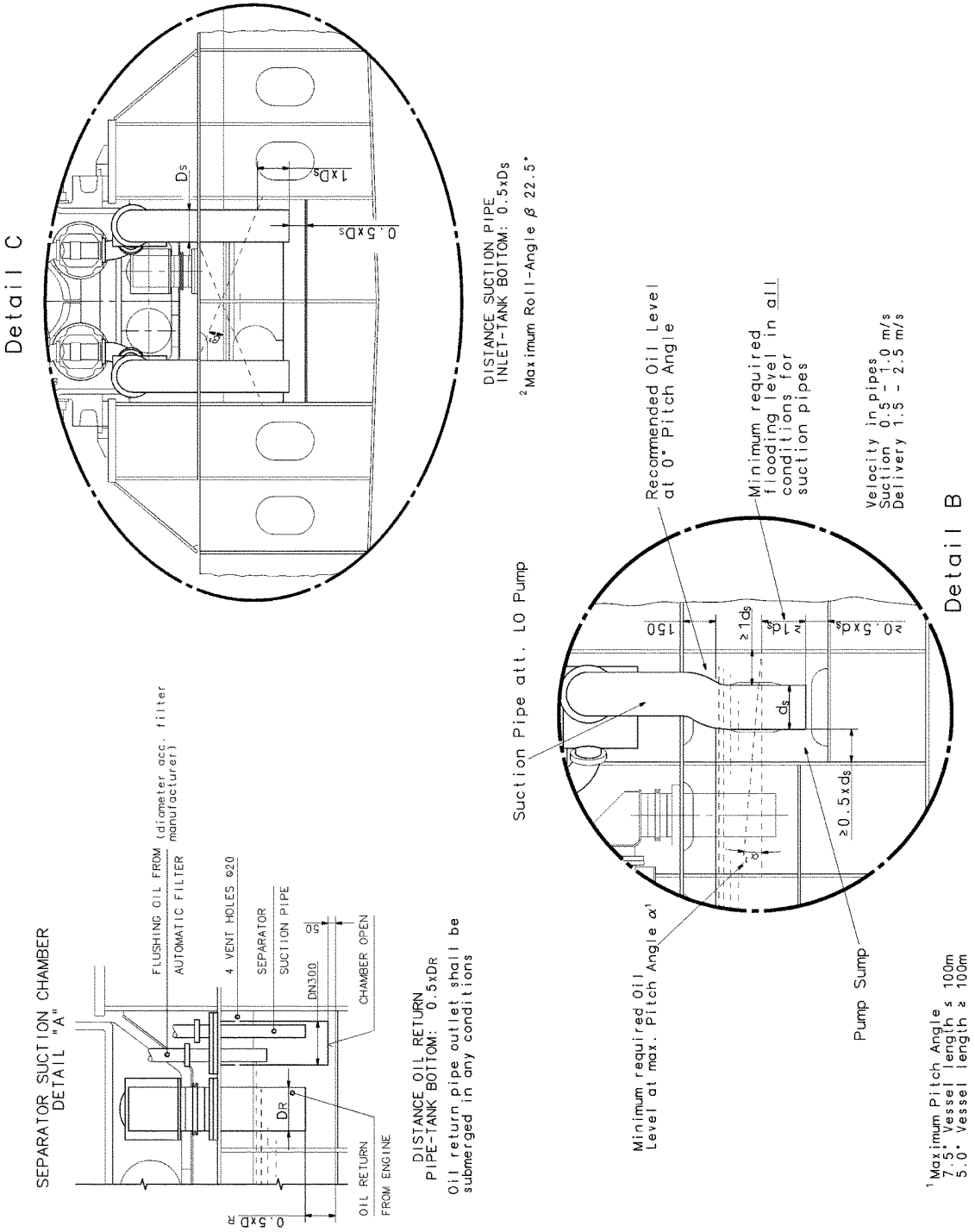

Figure 129: Example: Details lube oil service tank

2025-06-16 - 1.0

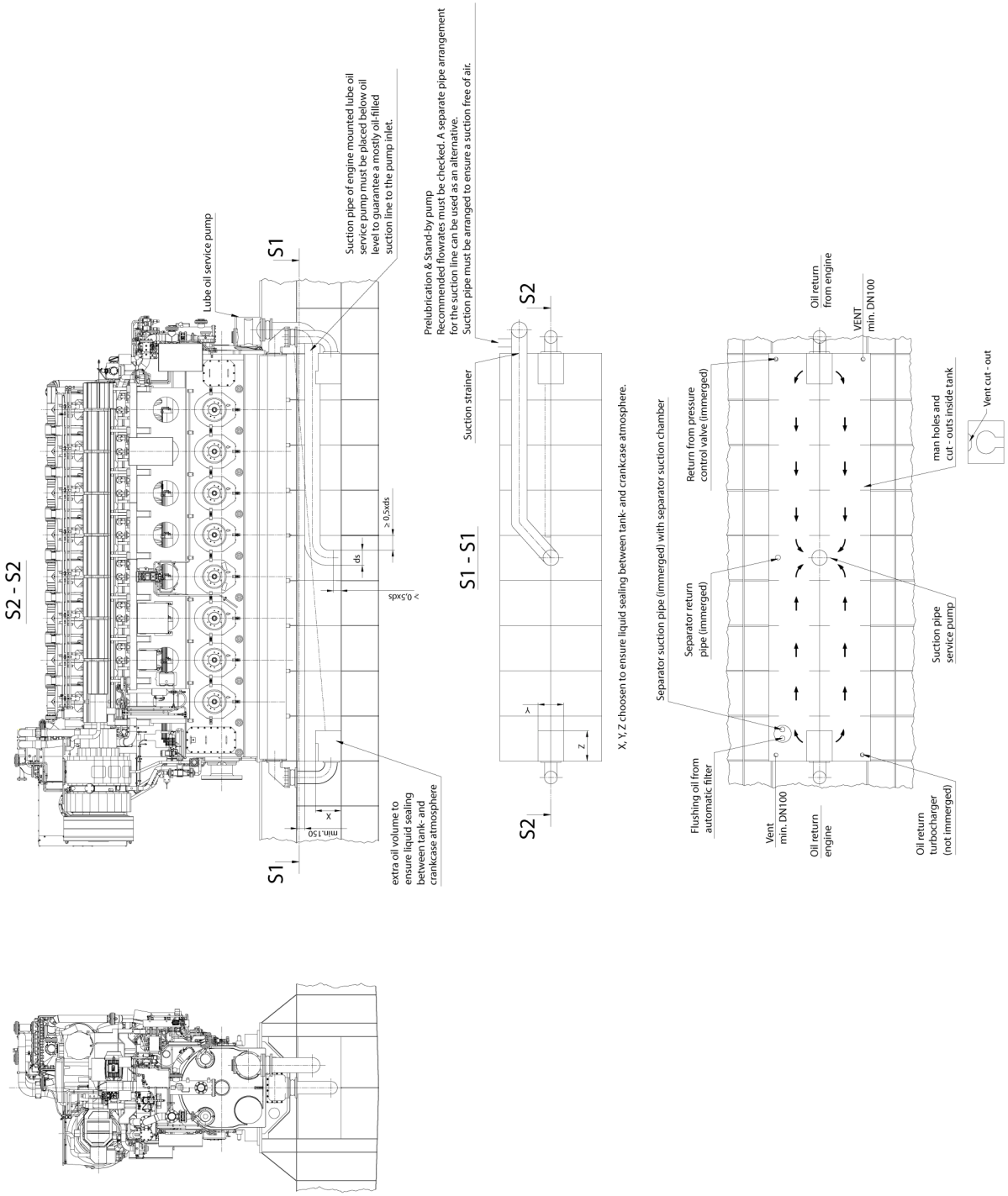

Figure 130: Example: Lube oil service tank with central suction

5.4.7 External lube oil system – Lube oil Filter

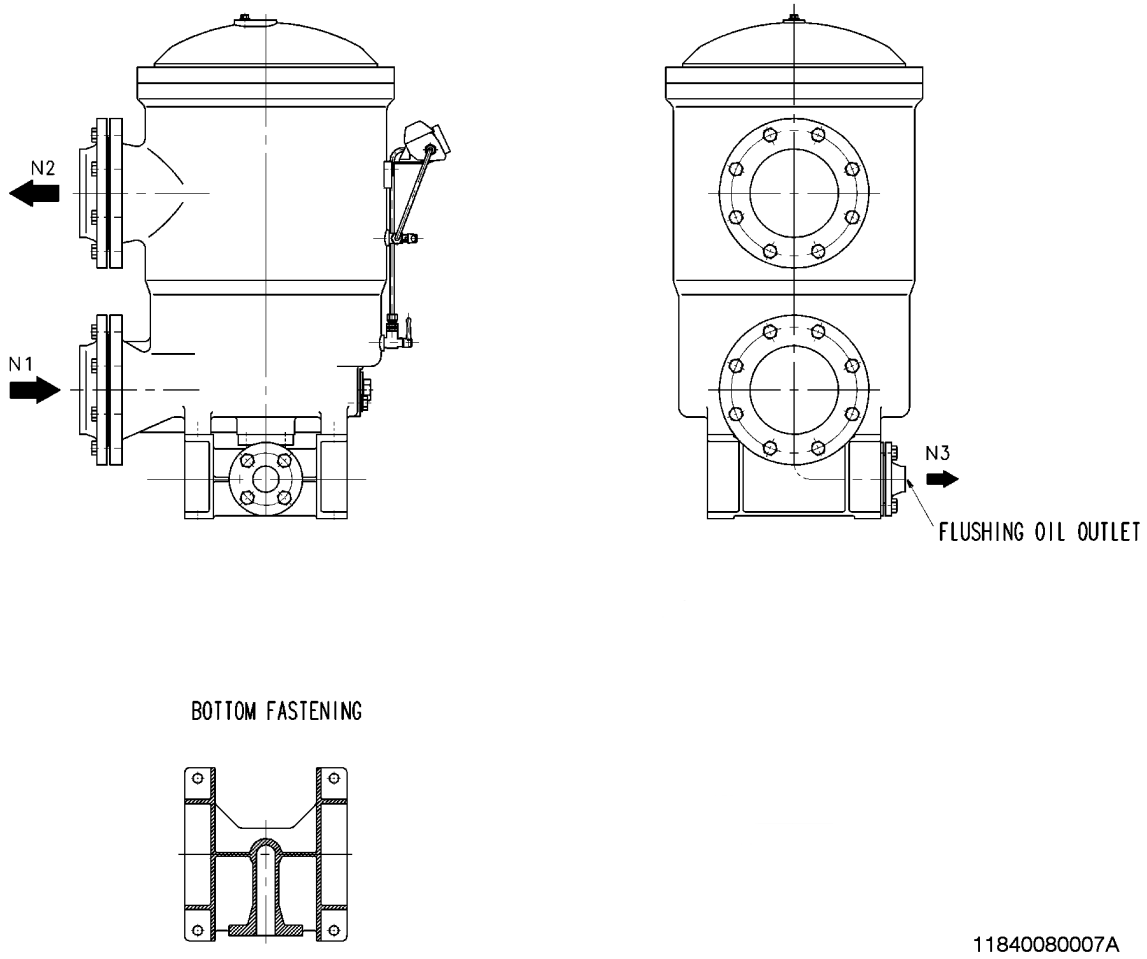

N1 Inlet
N2 Outlet
N3 Flushing oil outlet

Figure 131: Example: Lube oil automatic filter

2025-06-16 - 1.0

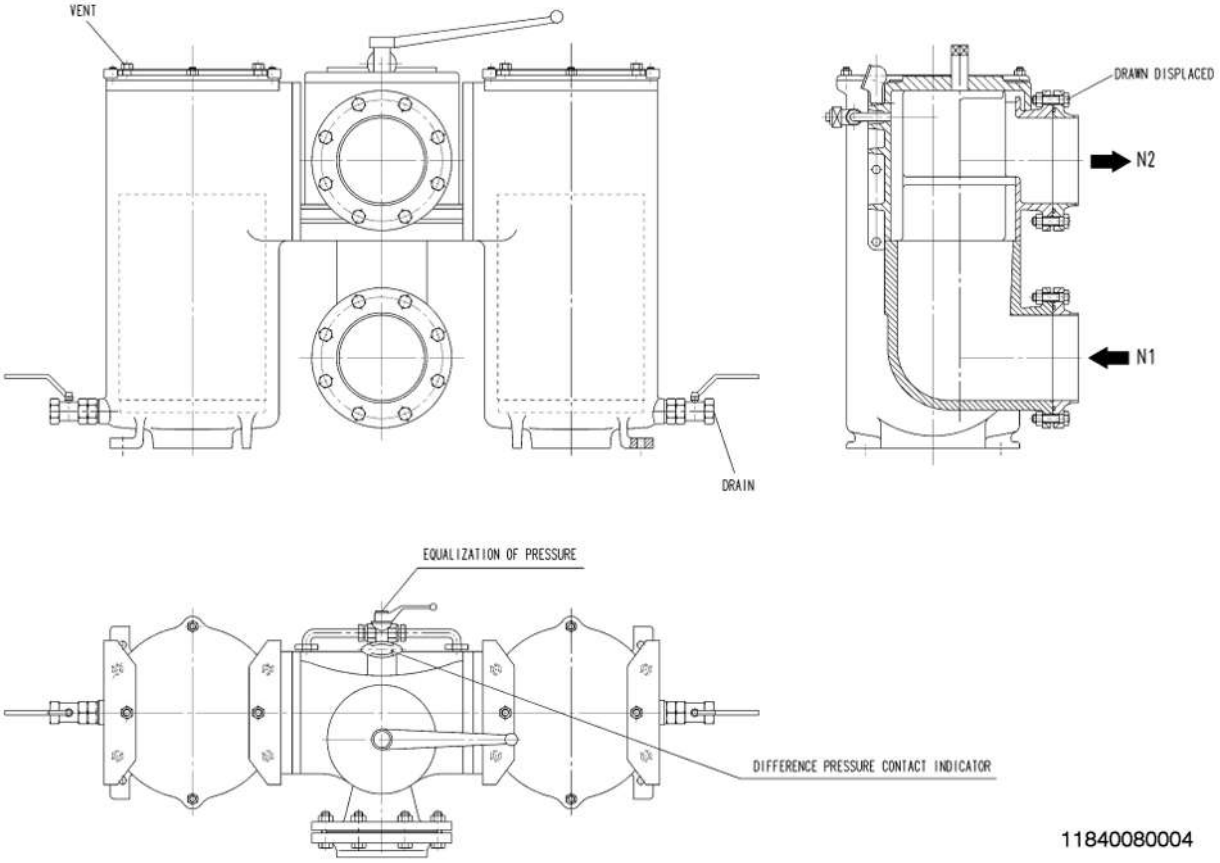

N1 Inlet N2 Outlet

Figure 132: Example: Lube oil duplex filter

5.5 Crankcase vent and lube oil tank vent

Vent pipes

The vent pipes from engine crankcase, turbocharger and lube oil service tank are to be arranged according to the sketch. The required nominal diameters ND are stated in the chart following the diagram.

Note:

- In case of multi-engine plants the venting pipework has to be kept separately.
- Condensate trap overflows are to be connected via siphon to drain pipe.
- Specific requirements of the classification societies are to be strictly observed.

2025-06-16 - 1.0

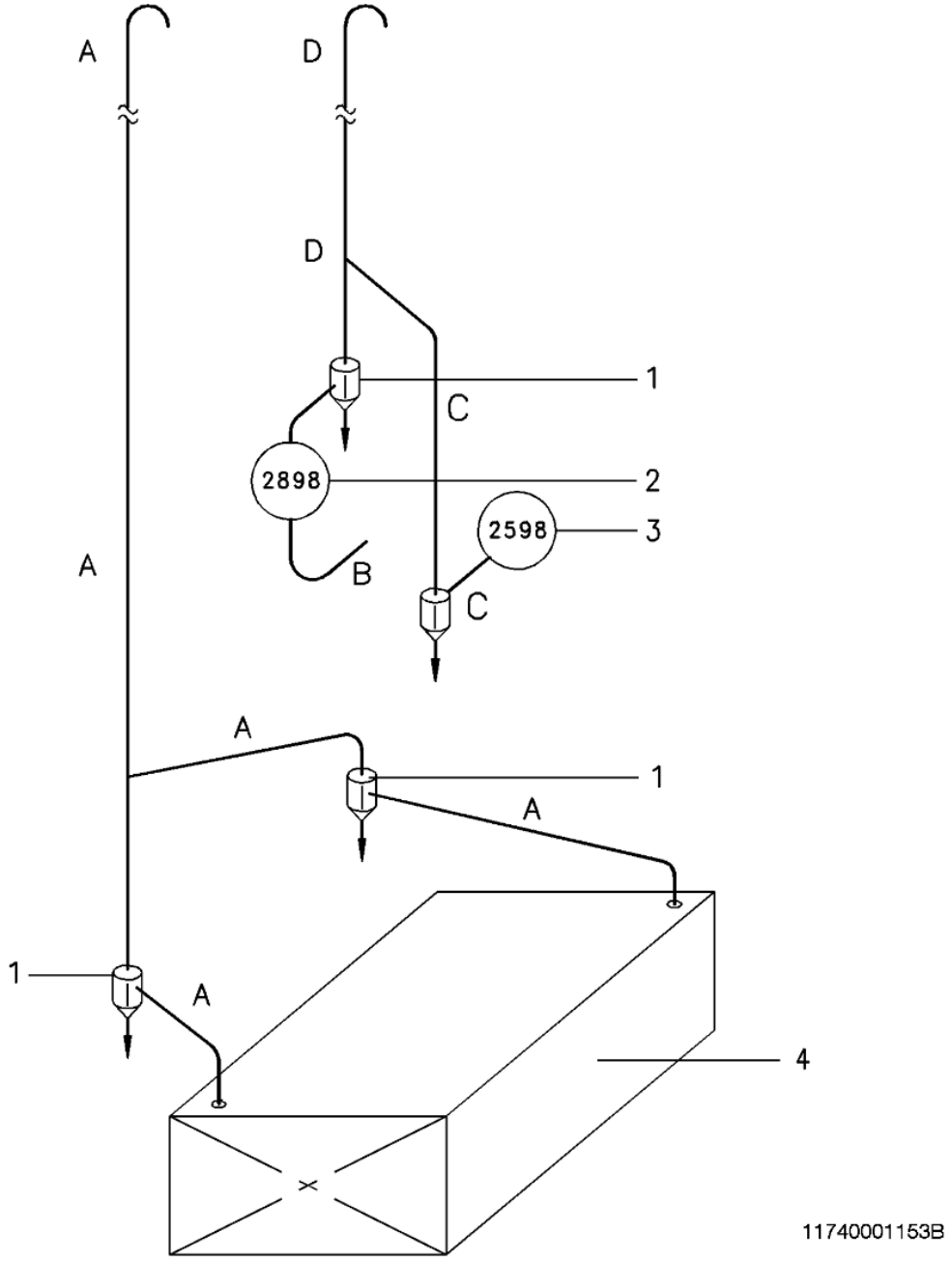

1 Condensate trap, continuously open
2 Connection crankcase vent
3 Turbocharger venting
4 Lubricating oil service tank

Figure 133: Crankcase vent and tank vent

Engine type	Nominal diameter ND (mm)			
	A	B	C	D
L engine	100	125	40	125
V engine	125	125	40	125

Table 162: Crankcase vent and tank vent

2025-06-16 - 1.0

5.6 Cooling water system

5.6.1 Internal cooling water system

As a standard:

- Engine equipment with attached HT cooling water pump

See overleaf

2025-06-16 - 1.0

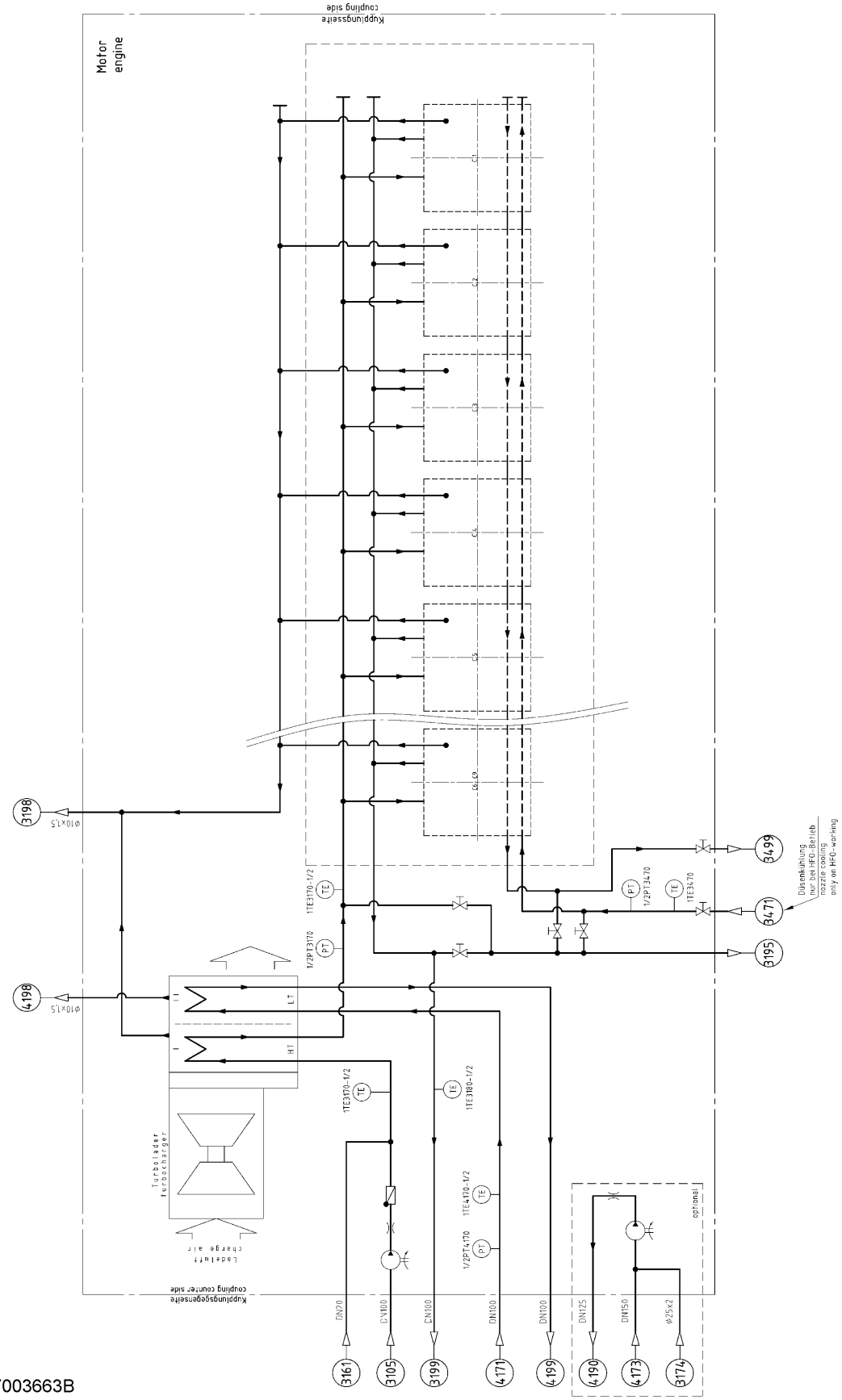

11447003663B

2025-06-16 - 1.0

Connection numbers

3105 HT cooling water inlet on GenSet
3161 HT cooling water inlet from preheater
3174 Cooling water expansion pipe (from expansion tank)
3195 Drain of HT cooling water pipe
3198 Venting of HT cooling water pipe
3199 HT cooling water outlet from engine
3471 Nozzle cooling water inlet to engine
3499 Nozzle cooling water outlet from engine
4171 LT cooling water inlet to engine
4173 LT cooling water inlet to cooling water pump
4190 LT cooling water outlet from cooling water pump
4198 Venting of low pressure charge air cooler
4199 LT cooling water outlet from engine

Figure 134: Internal cooling water system – Exemplary

Note:
The drawing shows the basic internal media flow of the engine in general. Project-specific drawings thereof don´t exist.

5.6.2 External cooling water system – Description

The diagrams showing cooling water systems for main engines comprising the possibility of heat utilisation in a fresh water generator and equipment for preheating of the charge air in a two-stage charge air cooler during part load operation.

Note:
The arrangement of the cooling water system shown here is only one of many possible solutions. It is recommended to inform MAN Energy Solutions in advance in case other arrangements should be desired. In any case two seawater coolers have to be installed to ensure continuous operation while one cooler is shut off (e.g. for cleaning).

For special applications, e.g. GenSets or dual fuel engines, supplements will explain specific necessities and deviations.

For the design data of the system components shown in the diagram see section Planning data, Page 107 and following sections.

There are many possible concepts for the arrangement of cooling water systems and the best solution always depends on the specific application of the engine and ship. The table below shows the main characteristics and schemes of two main concepts. For further information contact MAN Energy Solutions.

Concept	Mixing CW system	Conventional CW system
Arrangement	Physically and thermodynamically connected LT and HT circuit	Physically and thermodynamically separated LT and HT circuit
Features	One central seawater cooler sufficient Reduced piping	No transfer of pressure peaks and pollutants between LT and HT circuits Central cooler possible with HT-cooler recooled by LT-cooling water

2025-06-16 - 1.0

Concept	Mixing CW system	Conventional CW system
Application	Economic solution for vessels with limited space Not recommended for multi-engine plants with attached cooling water pumps or variable engine speed Not recommended for plants with combustion air intake from outside the vessel or plants with high requirements on capacity of waste heat recovery from HT-cooling water.	Vessels which require convenient commissioning and maintenance as well as robust temperature control

Table 163: Characteristics of cooling water concepts

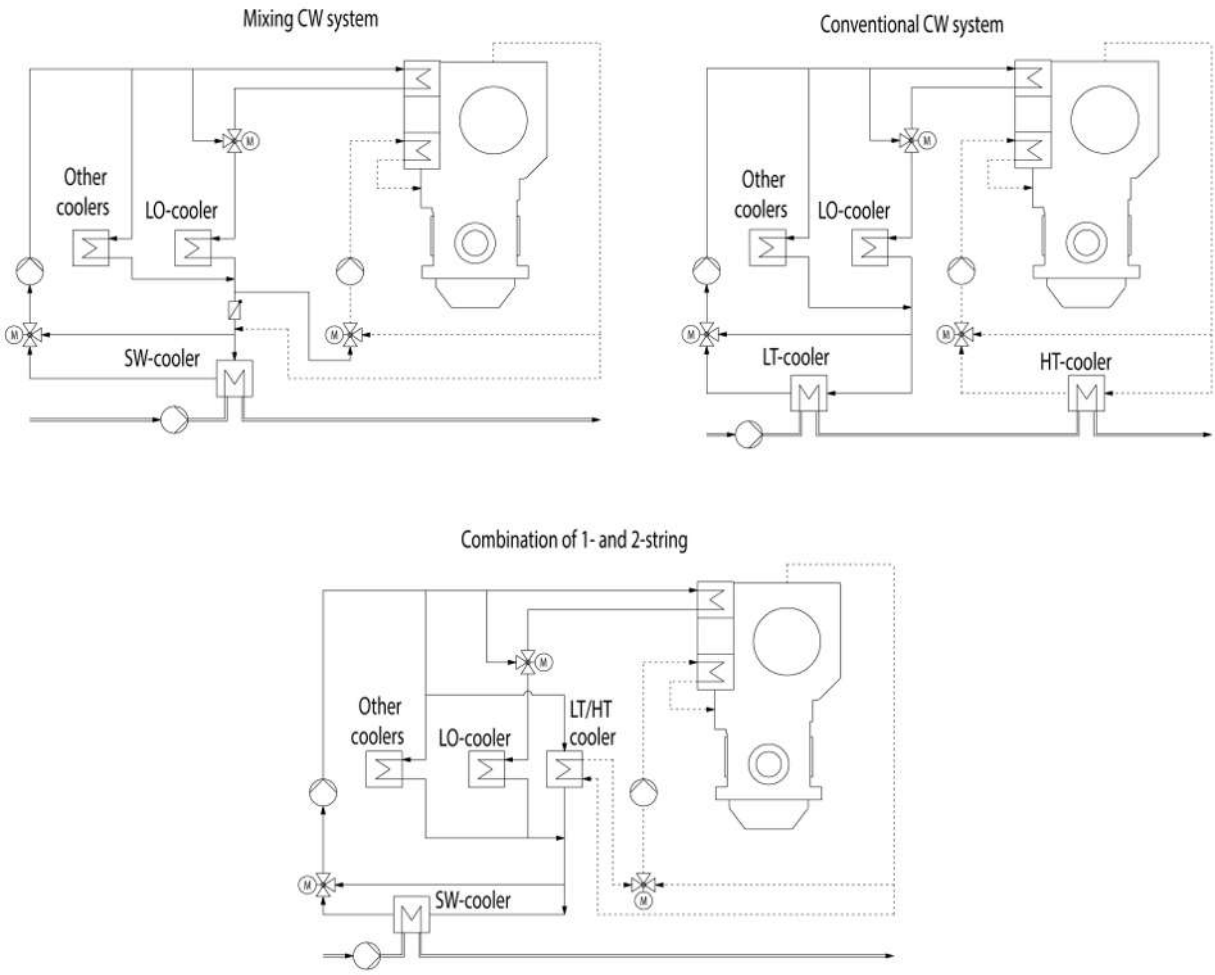

Figure 135: Basic schemes of cooling water concepts

The cooling water is to be conditioned by using a corrosion inhibitor, see section Specification of engine coolant, Page 279.

Cooling water that is not treated properly may cause serious corrosion during storage or operation of the engine.

LT = Low temperature

HT = High temperature

Cooler dimensioning, general

For coolers operated by seawater (not treated water), lube oil or DMA/DMB on the primary side and treated freshwater on the secondary side, an additional safety margin of 10% related to the heat transfer coefficient is to be considered. If treated water is applied on both sides, MAN Energy Solutions does not insist on this margin.

In case antifreeze is added to the cooling water, the corresponding lower heat transfer is to be taken into consideration.

The cooler piping arrangement should include venting and draining facilities for the cooler. In case coolers for lube oil, fuel oil or other environmental hazardous fluids are operated by seawater, we strongly recommend to use double wall plate type coolers. These coolers allow to detect leakage and prevent the seawater from pollution by hazardous fluids.

Open/closed system

Open system

Characterised by "atmospheric pressure" in the expansion tank. Pre-pressure in the system, at the suction side of the cooling water pump is given by the geodetic height of the expansion tank (standard value 6–9 m above crankshaft of engine).

Closed system

In a closed system, the expansion tank is pressurised and has no venting connection to open atmosphere. This system is recommended in case the engine will be operated at cooling water temperatures above 100°C or an open expansion tank may not be placed at the required geodetic height. Use air separators to ensure proper venting of the system.

Venting

Note:
Insufficient venting of the cooling water system prevents air from escaping which can lead to thermal overloading of the engine. Make sure that a minimum flow rate of 1% of the HT-cooling water flow given in section 2 is led from the engine HT-venting connection to the expansion tank at maximum engine speed.

The cooling water system needs to be vented at the highest point in the cooling system. Additional points with venting lines to be installed in the cooling system according to layout and necessity. In case engines may be operated on gas or low flashpoint fuels like methanol, all venting pipes have to be routed to open atmosphere.

If LT and HT string are separated, make sure that the venting lines are always routed only to the associated expansion tank. The venting pipe must be connected to the expansion tank below the minimum water level, this prevents oxydation of the cooling water caused by "splashing" from the venting pipe. We recommend to connect the venting pipes at the tank bottom. The expansion tank should be equipped with venting pipe and flange for filling of water and inhibitors.

Additional notes regarding venting pipe routing:

- The ventilation pipe should be continuously inclined (min. 5 degrees).
- At the interface to the system (engine connection terminal), the line must be continued directly with an elastic pipe connection (e.g. hose line).
- No additional masses such as shut-off valves, reducers, extensions, etc. may be attached to the engine-side connection terminal, since they represent an additional oscillating mass that can cause the line to break during operation.
- Venting pipes from several engine circuits may only be connected together if there are no longer any pressure differences between the individual pipes.

2025-06-16 - 1.0

- It is to be avoided to merge venting pipes from low-temperature (LT) and high-temperature (HT) circuits, as a separate fault detection (e.g. lubricating oil or fuel in the cooling water) is no longer possible.
- No restrictions, no kinks in the ventilation pipes.
- Merging of ventilation pipes only permitted with appropriate cross-sectional enlargement.
- In case the engine HT cooling water may be cooled down in part load operation, a throttle valve has to be installed in the HT venting pipe to adjust the flow towards the expansion tank. The valve is recommended for plants with mixing systems, combustion air intake from outside the vessel, operation under arctic conditions or other special applications. In these cases, contact MAN Energy Solutions.

Draining

At the lowest point of the cooling system, a drain has to be provided. Additional points for draining to be provided in the cooling system according to layout and necessity, e.g. for components in the system that will be removed for maintenance.

We recommend using lockable valves or locking caps for sample and draining points to avoid opening by mistake.

LT cooling water system

In general the LT cooling water passes through the following components:

- Stage 2 of the two-stage charge air cooler (HE-008)
- Lube oil cooler, free-standing (HE-002)
- Nozzle cooling water cooler (HE-005)
- Fuel oil cooler (HE-007)
- Gearbox lube oil cooler (HE-023) (or e.g. alternator cooling in case of an electric propulsion plant)
- Cooler for LT cooling water (HE-024)
- Fuel oil cooler, supply circuit (HE-025) (if applicable, see section External fuel system – Heavy fuel oil (HFO) supply system, Page 382)
- Other components, for example, auxiliary engines (GenSets)

LT cooling water pumps can be either of engine driven or electrically driven type.

In case an engine driven LT pump is used and no electric driven pump (LT main pump) is installed in the LT circuit, an LT circulation pump has to be installed. We recommend an electric driven pump with a capacity of approximately 8 m³/h at 1.5 bar pressure head. The pump has to be operated simultaneously to the prelubrication pump. Make sure to keep the pump running for at least 45 minutes after stop of the engine to cool down all connected system components. In case a 100% lube oil stand-by pump is installed, the circulation pump has to be increased to the size of a 100% LT stand-by pump to ensure cooling down the lube oil in the cooler during prelubrication before engine start. The system has to be designed, so that the temperatures for lube oil and cooling water, which are given in section Operating/service temperatures and pressures, Page 152, are adhered during operation and stand-by of the engine. For shutdown of the engine the information in section Engine load reduction, Page 70 must be observed. In case no electric stand-by pump will be installed, the engine and lube oil tank have to be cooled down by operating the engine at low load (< 15% MCR) for at least 4 minutes before shut down. The shipyard has to make sure, that lube oil separators will not

2025-06-16 - 1.0

cause overheating of the oil during standstill of the engine. For max. permissible temperatures, see section Starting conditions, Page 57. For details contact MAN Energy Solutions.

The system components of the LT cooling water circuit are designed for a max. LT cooling water temperature of 38°C, with a corresponding seawater temperature of 32°C (tropical conditions).

However, the capacity of the cooler for LT cooling water (HE-024) is determined by the temperature difference between seawater and LT cooling water. Due to this correlation, an LT freshwater temperature of 32°C can be ensured at a seawater temperature of 25°C.

To meet the IMO Tier I/IMO Tier II regulations the set point of the LT cooling water temperature control valve (MOV-016) is to be adjusted to 32°C. However this temperature will fluctuate and reach at most 38°C with a seawater temperature of 32°C (tropical conditions). In case other temperatures are required in the LT system, the engine setting has to be adapted accordingly. For details contact MAN Energy Solutions.

The charge air cooler stage 2 (HE-008) and the lube oil cooler (HE-002) are installed in series to obtain a low delivery rate of the LT cooling water pump (P-004 or P-076).

P-004 or P-076/LT cooling water pump

The delivery rates of the service and stand-by pump are mainly determined by the cooling water required for the charge air cooler stage 2 and the other coolers.

For operating auxiliary engines (GenSets) in port, the installation of an additional smaller pump is recommendable.

MOV-003/Charge air temperature control valve (CHATCO)

This three way valve is to be installed as a mixing valve.

It serves two purposes:

1. In engine part load operation, depending on the ambient temperature, the charge air cooler stage 2 (HE-008) is partially or completely bypassed, so that a higher charge air temperature is maintained.
2. The valve reduces the accumulation of condensed water during engine operation under tropical conditions by regulation of the charge air temperature. Below a certain intake air temperature the charge air temperature is kept constant. When the intake temperature rises, the charge air temperature will be increased accordingly.

The three-way valve is to be designed for a pressure loss of 0.3–0.6 bar and is to be equipped with an actuator with high positioning speed. For adjustment of the valve, follow instructions given in MAN Energy Solutions planning documentation. The actuator must permit manual emergency adjustment.

HE-002/Lube oil cooler, free-standing

For the description see section External lube oil system, Page 312. For heat data, flow rates and tolerances see section Planning data, Page 107 and the following. For the description of the principal design criteria see paragraph Cooler dimensioning, general, Page 338.

HE-024/Cooler for LT cooling water

For heat data, flow rates and tolerances of the heat sources see section Planning data, Page 107 and the following. For the description of the principal design criteria for coolers see paragraph Cooler dimensioning, general, Page 338.

MOV-016/LT cooling water temperature control valve

This is a motor-actuated three-way regulating valve with a linear characteristic. It is to be installed as a mixing valve. It maintains the LT cooling water at set point temperature (32°C standard).

2025-06-16 - 1.0

The three-way valve is to be designed for a pressure loss of 0.3–0.6 bar. It is to be equipped with an actuator with low positioning speed. For adjustment of the valve follow instructions given in MAN Energy Solutions planning documentation. The actuator must permit manual emergency adjustment.

The actual LT flow temperature is measured by a temperature sensor, directly downstream of the three-way mixing valve in the supply pipe to charge air cooler stage 1.

This sensor has to be installed by the shipyard. To ensure instantaneous measurement of the mixing temperature of the three-way mixing valve, the distance to the valve should be 10 to 15 times the pipe diameter.

For single engine plants, the control function may be taken over by the SaCoS control unit.

For multi engine plants, MAN Energy Solutions can supply a suitable external controller.

Note:
For engine operation with reduced NO_x emission, according to IMO Tier I/IMO Tier II requirement, at 100% engine load and a seawater temperature of 25°C (IMO Tier I/IMO Tier II reference temperature), an LT cooling water temperature of 32°C before charge air cooler stage 2 (HE-008) is to be maintained. For other temperatures, the engine setting has to be adapted. For further details contact MAN Energy Solutions.

FIL-021/Strainer for cooling water

In order to protect the engine and system components, several strainers are to be provided at the places marked in the diagram. We recommend to install Y-type strainers with magnetic inserts and a mesh size of 1–2 mm depending on the pipe diameter.

The strainers have to be installed in horizontal pipes or pipes with flow direction downwards.

We recommend to install shut off-flaps upstream and downstream of the strainer.

HE-005/Nozzle cooling water cooler

The nozzle cooling water system is a separate and closed cooling circuit. It is cooled down by LT cooling water via the nozzle cooling water cooler (HE-005).

Heat data, flow rates and tolerances are indicated in section Planning data, Page 107 and the following. The principal design criteria for coolers has been described before in paragraph Cooler dimensioning, general, Page 338. For plants with two main engines only one nozzle cooling water cooler (HE-005) is required. As an option a compact nozzle cooling water module (MOD-005) can be delivered, see section Nozzle cooling water module, Page 352.

HE-007/Fuel oil cooler

This cooler is required to dissipate the heat of the fuel injection pumps during DMA/DMB operation. For the description of the principal design criteria for coolers see paragraph Cooler dimensioning, general, Page 338. For plants with more than one engine, connected to the same fuel oil system, only one DMA/DMB cooler is required. In case the fuel oil cooler is recooled by seawater, we recommend to use a double-wall type cooler.

In case fuels with very low viscosity are used (e.g. arctic diesel or military fuels), a chiller system may be necessary to meet the minimum required fuel viscosity (see section Fuel oil system, Page 362). Contact MAN Energy Solutions in that case.

T-075/LT cooling water expansion tank

The effective tank capacity should be high enough to keep approximately 2/3 of the tank content of HT cooling water expansion tank T-002. In case of twin-engine plants with a common cooling water system, the tank capacity should

2025-06-16 - 1.0

be by approximately 50% higher. The tanks T-075 and T-002 should be arranged side by side to facilitate installation. For plants with combustion air intake from outside, or high demands of waste heat energy, we recommend to separate HT- and LT- tanks from each other (no common tank).

In any case the tank bottom must be installed above the highest point of the LT system at any ship inclination.

For the recommended installation height and the diameter of the connecting pipe, see table Service tanks capacities, Page 159.

HT cooling water circuit

General

The HT cooling water system consists of the following coolers and heat exchangers:

- Charge air cooler stage 1 (HE-010)
- Cylinder cooling
- Cooler for HT cooling water (HE-003)
- Heat utilisation, e.g. fresh water generator (HE-026)
- HT cooling water preheating module (MOD-004)

The HT cooling water pumps can be either of engine-driven or electrically-driven type. The outlet temperature of the cylinder cooling water at the engine is to be adjusted to 90 °C.

For HT cooling water systems, where more than one main engine is integrated, each engine should be provided with an individual engine driven HT cooling water pump. Alternatively electrically-driven HT cooling water pumps may be used for all engines. However, an individual HT temperature control valve is required for each engine. The total cooler and pump capacities are to be adapted accordingly.

The shipyard is responsible for the correct cooling water distribution, ensuring that each engine will be supplied with cooling water at the flow rates required by the individual engines, under all operating conditions. To meet this requirement, orifices, flow regulation valves, by-pass systems etc. are to be installed where necessary. Check total pressure loss in HT circuit. The delivery height of the attached pump must not be exceeded.

HT cooling water preheating module (MOD-004)

Before starting a cold engine, it is necessary to preheat the water jacket up to min. 60°C at engine outlet.

For the total heating power required for preheating the HT cooling water from 10°C to 60°C within 4 hours see table Heating power, Page 342.

Engine type	L/V engine
Min. heating power (kW/cyl.)	6

Table 164: Heating power

These values include the radiation heat losses from the outer surface of the engine. Also a margin of 20 % for heat losses of the cooling system has been considered.

To prevent a too quick and uneven heating of the engine, the preheating temperature of the HT cooling water must remain mandatory below 90°C at engine inlet and the circulation amount may not exceed 30% of the nominal flow. The maximum heating power has to be calculated accordingly.

2025-06-16 - 1.0

A secondary function of the preheater is to provide heat capacity in the HT cooling water system during engine part load operation. This is required for marine propulsion plants with a high freshwater requirement, e.g. on passenger vessels, where frequent load changes are common.

For engines operated in arctic conditions or with charge air from outside the vessel, the capacity of the preheater has to be increased. In this case contact MAN Energy Solutions.

Avoid an installation of the preheater in parallel to the engine driven HT-pump. In this case, the preheater may not be operated while the engine is running. Preheaters operated on steam or thermal oil may cause alarms since a post-cooling of the heat exchanger is not possible after engine start (preheater pump is blocked by counterpressure of the engine driven pump).

An electrically driven pump becomes necessary to circulate the HT cooling water during preheating. For the required minimum flow rate see table below.

The higher values are required for preheating under cold conditions in case of increased preheating capacity.

No. of cylinders, config.	Minimum flow rate required during preheating and post-cooling
	m^3/h
6L	7.2 – 10.8
7L	8.4 – 12.6
8L	9.2 – 13.8
9L	10.8 – 16.2
12V	14.4 – 21.6
14V	16.8 – 25.2
16V	19.2 – 28.8
18V	21.6 – 32.4

Table 165: Minimum flow rate during preheating and post-cooling

The preheating of the main engine with cooling water from auxiliary engines is also possible, provided that the cooling water is treated in the same way. In that case, the expansion tanks of the two cooling systems have to be installed at the same level. Furthermore, it must be checked whether the available heat is sufficient to pre-heat the main engine. This depends on the number of auxiliary engines in operation and their load. It is recommended to install a separate preheater for the main engine, as the available heat from the auxiliary engines may be insufficient during operation in port.

As an option MAN Energy Solutions can supply a compact HT cooling water preheating module (MOD-004). One module for each main engine is recommended. Depending on the plant layout, also two engines can be heated by one module.

Contact MAN Energy Solutions to check the hydraulic circuit and electric connections.

HE-003/Cooler for HT cooling water

For heat data, flow rates and tolerances of the heat sources see section Planning data, Page 107 and following sections. For the description of the principal design criteria for coolers see paragraph Cooler dimensioning, general, Page 338.

2025-06-16 - 1.0

HE-026/Fresh water generator

The fresh water generator must be switched off automatically when the cooling water temperature at the engine outlet drops below 85°C continuously.

HT temperature control

The HT temperature control system consists of the following components:

- 1 electrically activated three-way mixing valve with linear characteristic curve (MOV-002).
- 1 temperature sensor TE, directly downstream of the three-way mixing valve in the supply pipe to charge air cooler stage 1 (for EDS visualisation and control of preheater valve).

  This sensor will be delivered by MAN Energy Solutions and has to be installed by the shipyard.
- 1 temperature sensor TE, directly downstream of the engine outlet.

  This sensor is already installed at the engine by MAN Energy Solutions.

The temperature controllers are available as software functions inside the Gateway Communication Module of SaCoSone. The temperature controllers are operated by the displays at the operating panels as far as it is necessary. From the interface cabinet the relays actuate the control valves.

It serves to maintain the cylinder cooling water temperature constantly at 90 °C at the engine outlet – even in case of frequent load changes – and to protect the engine from excessive thermal load.

For adjusting the outlet water temperature (constantly to 90°C) to engine load and speed, the cooling water inlet temperature is controlled. The electronic water temperature controller recognises deviations by means of the sensor at the engine outlet and afterwards corrects the reference value accordingly.

- The electronic temperature controller is installed in the switch cabinet of the engine room.

For a stable control mode, the following boundary conditions must be observed when designing the HT freshwater system:

- The temperature sensor is to be installed in the supply pipe to stage 1 of the charge air cooler. To ensure instantaneous measurement of the mixing temperature of the three-way mixing valve, the distance to the valve should be 10 to 15 times the pipe diameter.
- The three-way valve (MOV-002) is to be installed as a mixing valve. It is to be designed for a pressure loss of 0.3–0.6 bar. It is to be equipped with an actuator of high positioning speed. For adjustment of the valve follow instructions given in MAN Energy Solutions planning documentation. The actuator must permit manual emergency adjustment.
- The pipes within the system are to be kept as short as possible in order to reduce the dead times of the system, especially the pipes between the three-way mixing valve and the inlet of the charge air cooler stage 1 which are critical for the control.

The same system is required for each engine, also for multi-engine installations with a common HT fresh water system.

In case of a deviating system layout, MAN Energy Solutions is to be consulted.

P-002/HT cooling water service pump, attached

The engine is normally equipped with a HT cooling water service pump, attached (default solution).

For technical data of the pumps see table HT cooling water – Engine, Page 153.

P-079/HT cooling water stand-by pump, free-standing

The HT cooling water stand-by pump (free-standing) has to be of the electrically driven type.

2025-06-16 - 1.0

It is required to cool down the engine for a period of 15 minutes after shut-down. In case that neither an electrically driven HT cooling water pump nor an electrically driven stand-by pump is installed (for example, multi-engine plants with engine driven HT cooling water pump without electrically driven HT stand-by pump, if applicable by the classification rules), it is possible to cool down the engine by a separate small preheating pump, see table Minimum flow rate during preheating and post-cooling, Page 343. If the optional HT cooling water preheating module (MOD-004) with integrated circulation pump is installed, it is also possible to cool down the engine with this small pump. However, the pump used to cool down the engine, has to be electrically driven and started automatically after engine shut-down.

None of the cooling water pumps is a self-priming centrifugal pump.

Design flow rates should not be exceeded by more than 15% to avoid cavitation in the engine and its systems. A throttling orifice is fitted at the engine for adjusting the specified operating point.

T-002/HT cooling water expansion tank

The HT cooling water expansion tank compensates changes in system volume and losses due to leakages. It is to be arranged in such a way, that the tank bottom is situated above the highest point of the system at any ship inclination.

The expansion pipe shall connect the tank with the suction side of the pump(s), as close as possible. It is to be installed in a steady rise to the expansion tank, without any air pockets. The minimum required diameter for the pipe is given, see table Service tanks capacities, Page 159 depending on engine size. In case more than one engine is connected to the same tank, the pipe has to be extended accordingly.

For the required volume of the tank and the recommended installation height, see table Service tanks capacities, Page 159.

Tank equipment:

- Sight glass for level monitoring or other suitable device for continuous level monitoring
- Low-level alarm switch
- Overflow and filling connection
- Inlet for corrosion inhibitor

2025-06-16 - 1.0

5.6 Cooling water system

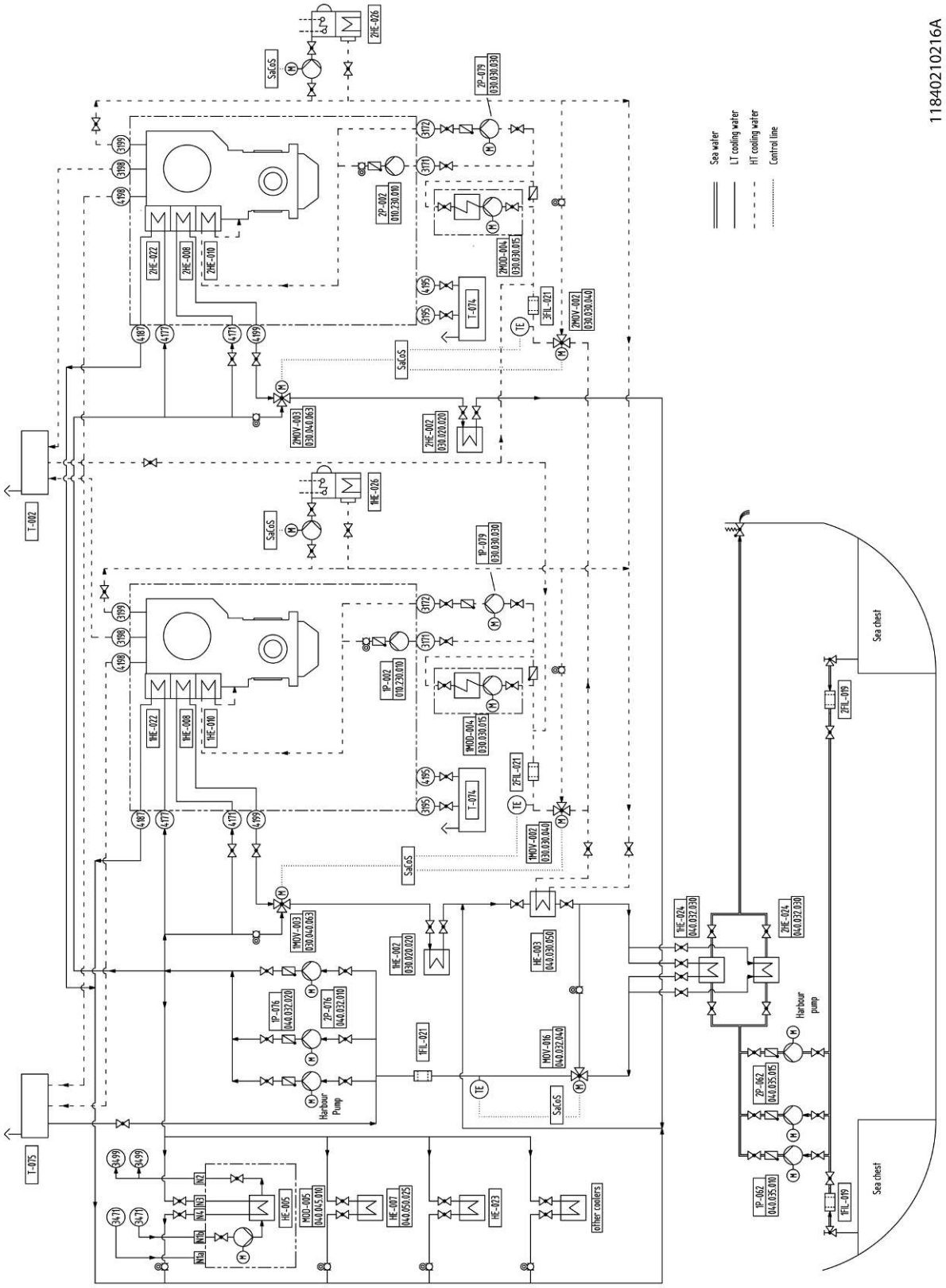

	Components
1,2 FIL-019	Seawater filter
1,2,3 FIL-021	Strainer for cooling water
1,2 HE-002	Lube oil cooler
HE-003	Cooler for HT cooling water
HE-005	Nozzle cooling water cooler
HE-007	Fuel oil cooler
1,2 HE-008	Charge air cooler (stage 2)
1,2 HE-010	Charge air cooler (stage 1)
1,2 HE-022	Cooler for governor oil
HE-023	Gearbox lube oil cooler
1,2 HE-024	Cooler for LT cooling water
1,2 HE-026	Fresh water generator
	Major cooling water engine connections
3171	HT cooling water inlet to engine
3172	HT cooling water inlet to engine (reserve connection) 1
3195	Drain of charge air cooler 1 (HT)
3198	Venting of HT cooling water pipe 1
3199	HT cooling water outlet from engine
3471	Nozzle cooling water inlet to engine
3499	Nozzle cooling water outlet from engine
	Connections to the nozzle cooling module
N1 a, b	Nozzle cooling water inlet
N2	Nozzle cooling water outlet
1,2 MOD-004	HT cooling water preheating module
MOD-005	Nozzle cooling water module
1,2 MOV-002	HT cooling water temperature control valve
1,2 MOV-003	Charge air temperature control valve (CHATCO)
MOV-016	LT cooling water temperature control valve
1,2 P-002	HT cooling water service pump, attached
1,2 P-062	Seawater pump, free-standing
1,2 P-076	LT cooling water pump, free-standing
1,2 P-079	HT cooling water pump, free-standing
T-002	HT cooling water expansion tank
T-074	Fresh water collecting tank
T-075	LT cooling water expansion tank
4171	LT cooling water inlet to engine
4177	LT cooling water inlet on speed governor
4187	LT cooling water outlet from speed governor
4195	Drain of charge air cooler 1 (LT)
4198	Venting of LT cooling water pipe
4199	LT cooling water outlet from engine 1
N3	LT cooling water inlet

Figure 136: Cooling water system diagram – Twin engine plant

5.6.3 External cooling water system – Collection and supply system

T-074/Cooling water collecting tank

The tank is to be dimensioned and arranged in such a way that the cooling water content of the circuits of the cylinder, turbocharger and nozzle cooling systems can be drained into it for maintenance purposes.

This is necessary to meet the requirements with regard to environmental protection (water has been treated with chemicals) and corrosion inhibition (re-use of conditioned cooling water).

Volumes for the engine are listed in table Cooling water and oil volume of engine, Page 159.

2025-06-16 - 1.0

P-031/Cooling water filling pump (not indicated in the diagram)

To refill the HT- and LT cooling water system after maintenance, we recommend to install a cooling water filling pump. The pump shall be installed below the cooling water collecting tank with pipe connections to the related systems.

5.6.4 External cooling water system – Low-speed operation cooling water system

Low-speed operation

In case the engine is operated below 60 % of nominal speed, the following items have to be taken in account:

- HT cooling water flow has to be maintained above minimum flow rate given in section Planning data, Page 107.
- HT cooling water pressure at the engine inlet has to be kept above the minimum pressure given in section Planning data, Page 107.

Single-engine plant

The attached cooling water pumps may fall below the required performance data, therefore we recommend using an electrical driven service support pump (P-089).

For installation of the pump follow strictly the P&ID in the following figure Cooling water system diagram – Low-speed operation, Page 349.

Performance data for the pump are given in section Planning data, Page 107. To cover operation during blackout, we recommend connecting the pump to the emergency power grid (switch over from standard net to emergency grid in case of blackout). For details contact MAN Energy Solutions or the licensee.

Multi-engine plant

In case the plant is designed for two or more engines that are operated totally independent from each other, the HT service stand-by pump may be used for the function of the support service pump. This item has to be checked with the classification society and MAN Energy Solutions technical staff. In case the engines are not independent from each other (no redundancy), the system has to be equipped with support pumps as described above (see paragraph Single-engine plant, Page 348). For details contact MAN Energy Solutions or the licensee.

2025-06-16 - 1.0

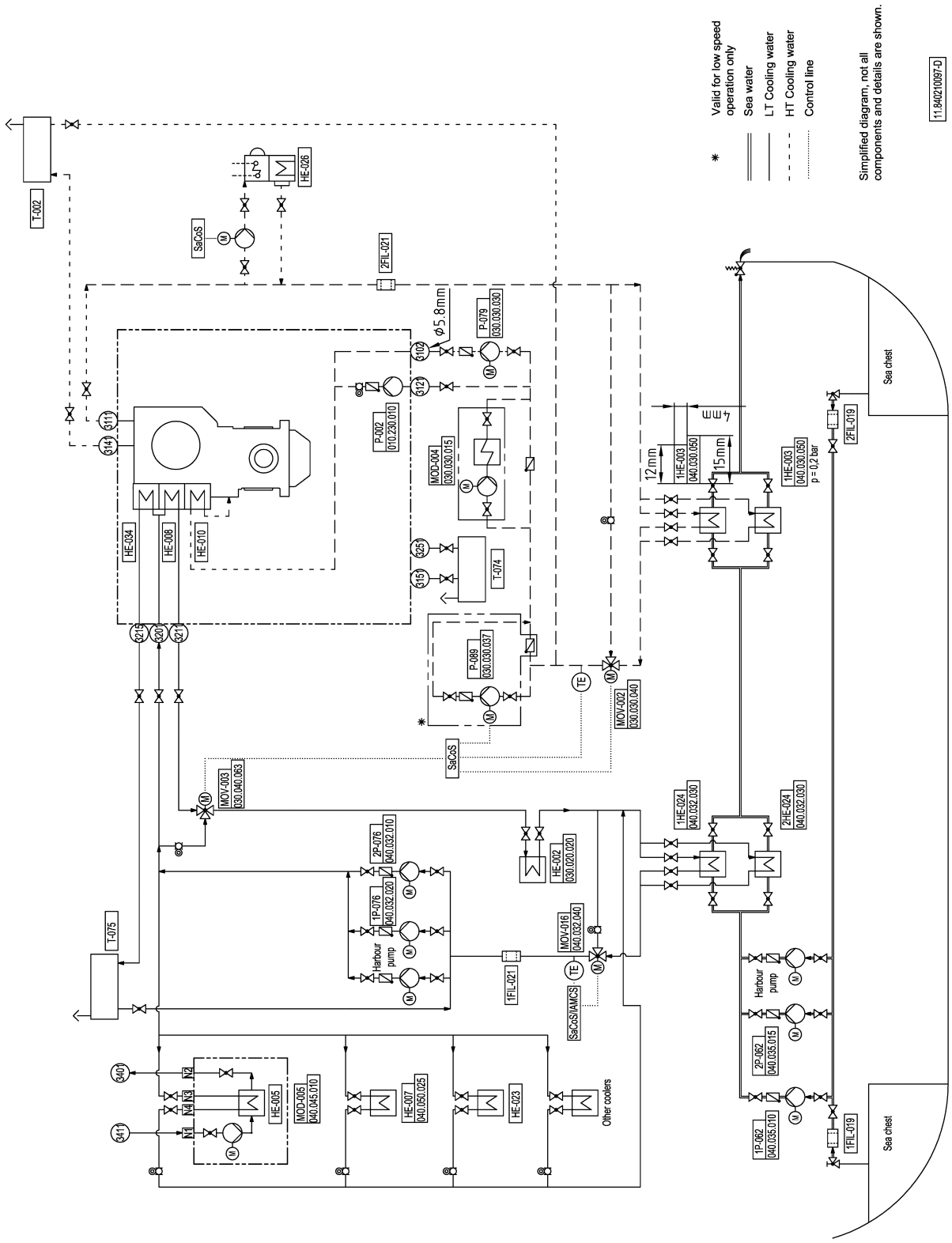

5.6 Cooling water system

5 Engine supply systems

2025-06-16 - 1.0

	Components
1,2 FIL-019	Seawater filter
1,2 FIL-021	Strainer for fresh cooling water
HE-002	Lube oil cooler, free-standing
1,2 HE-003	Cooler for HT cooling water
HE-005	Nozzle cooling water cooler
HE-007	Fuel oil cooler
HE-008	Charge air cooler (stage 2)
HE-010	Charge air cooler (stage 1)
HE-023	Gearbox lube oil cooler
1,2 HE-024	Cooler for LT cooling water
HE-026	Fresh water generator
HE-034	Compressor casing (water cooled)
MOV-002	HT cooling water temperature control valve
	Major cooling water engine connections
3102	HT cooling water inlet to engine (reserve connection)
3111	HT cooling water outlet from engine
3121	HT cooling water inlet to cooling water pump 1
3141	Venting of HT cooling water pipe 1
3151	Drain of HT cooling water pipe 1
3201	LT cooling water inlet to engine
	Connections to the nozzle cooling water module
N1	Nozzle cooling water inlet
N2	Nozzle cooling water outlet
MOV-003	Charge air temperature control valve (CHATCO)
MOD-004	HT cooling water preheating module
MOD-005	Nozzle cooling water module
MOV-016	LT cooling water temperature control valve
P-002	HT cooling water pump, attached
1,2 P-062	Seawater pump, free-standing
1,2 P-076	LT cooling water pump, free-standing
P-079	HT cooling water pump, free-standing
P-089	HT cooling water support pump
T-002	HT cooling water expansion tank
T-074	Fresh water collecting tank
T-075	LT cooling water expansion tank
3211	LT cooling water outlet from engine 1
3215	LT cooling water outlet from compressor casing 1
3251	Drain of LT cooling water pipe 1
3401	Nozzle cooling water inlet to engine
3411	Nozzle cooling water outlet from engine
N3	LT cooling water inlet
N4	LT cooling water outlet

Figure 137: Cooling water system diagram – Low-speed operation

5.6.5 External cooling water system – Miscellaneous items

Piping

Coolant additives may attack a zinc layer. It is therefore imperative to avoid using galvanised steel pipes. Treatment of cooling water as specified by MAN Energy Solutions will safely protect the inner pipe walls against corrosion.

Moreover, there is the risk of the formation of local electrolytic element couples where the zinc layer has been worn off, and the risk of aeration corrosion where the zinc layer is not properly bonded to the substrate.

See the working instructions 6682 000.16-01E for cleaning of steel pipes before fitting.

Pipes shall be manufactured and assembled in a way that ensures a proper draining of all segments. Venting is to be provided at each high point of the pipe system and drain openings at each low point. Make sure to use lockable ball valves or locking caps to prevent hot water leaving the system in case the valves are opened by mistake.

2025-06-16 - 1.0

Cooling water pipes are to be designed according to pressure values and flow rates stated in section Planning data, Page 107 and the following sections. Consider the maximal possible pressure level, that can be produced by the pumps (zero delivery head) integrated in the system and static pressure by expansion tanks or other equipment. The engine cooling water connections have to be designed according to PN10/PN16.

5.6.6 External cooling water system – Nozzle cooling system

General

In HFO operation, the nozzles of the fuel injection valves are cooled by freshwater circulation, therefore a nozzle cooling water system is required. It is a separate and closed system re-cooled by the LT cooling water system, but not directly in contact with the LT cooling water. The separate nozzle cooling water system ensures easy detection of damages at the nozzles. Even small fuel leakages are visible via the sight glass. The closed system also prevents the engine and other parts of the cooling water system from pollution by fuel oil. Cleaning of the system is quite easy and only a small amount of contaminated water has to be discharged to the sludge tank. In case the nozzle cooling water is not contaminated, it may be drained to the cooling water collecting tank. The nozzle cooling water is to be treated with corrosion inhibitor according to MAN Energy Solutions specification. For further information see section Specification of engine coolant, Page 279.

Note:
In diesel engines designed to operate prevalently on HFO the injection valves are to be cooled during operation on HFO. In the case of MGO or MDO operation exceeding 72 h, the nozzle cooling is to be switched off and the supply line is to be closed. The return pipe has to remain open.
In diesel engines designed to operate exclusively on MGO or MDO (no HFO operation possible), nozzle cooling is not required. The nozzle cooling system is omitted.

For operation on HFO or gas, the nozzle cooling system has to be activated.

P-005/Nozzle cooling water pump

The centrifugal (non self-priming) pump discharges cooling water via the nozzle cooling water cooler (HE-005) and the strainer for cooling water (FIL-021) to the header pipe on the engine and then to the individual injection valves.

From here, it is pumped through a manifold into the nozzle cooling water service tank from where it returns to the pump.

One system can be installed for up to three engines.

T-076/Nozzle cooling water service tank

For the installation height above the crankshaft centreline see section Planning data, Page 107 and the following.

If there is not enough room to install the tank at the prescribed height, an alternative pressure system of modular design is available, permitting installation at the engine room floor level next to the engine.

The system is to be closed with an over-/underpressure valve on tank top to prevent flashing to steam.

HE-005/Nozzle cooling water cooler

The nozzle cooling water cooler is to be connected in the LT cooling water circuit according to schematic diagram. Cooling of the nozzle cooling water is effected by the LT cooling water.

If an antifreeze is added to the cooling water, the resulting lower heat transfer rate must be taken into consideration. The cooler is to be provided with venting and draining facilities.

2025-06-16 - 1.0

TCV-005/Nozzle cooling water temperature control valve	The nozzle cooling water temperature control valve with thermal-expansion elements regulates the flow through the cooler to reach the required inlet temperature of the nozzle cooling water. It has a regulating range from approximately 55°C (valve begins to open the pipe from the cooler) to 65°C (pipe from the cooler completely open).
FIL-021/Strainer for cooling water	To protect the nozzles for the first commissioning of the engine a strainer for cooling water has to be provided. We recommend to install Y-type strainers. For further operation of the engine, we recommend to use a cartridge with mesh size of about 1 mm to catch particles. The strainers have to be installed in horizontal pipes or pipes with flow direction downwards.

5.6.7 External cooling water system – Nozzle cooling water module

Design

The nozzle cooling water module consists of a storage tank, on which all components required for nozzle cooling are mounted.

2025-06-16 - 1.0

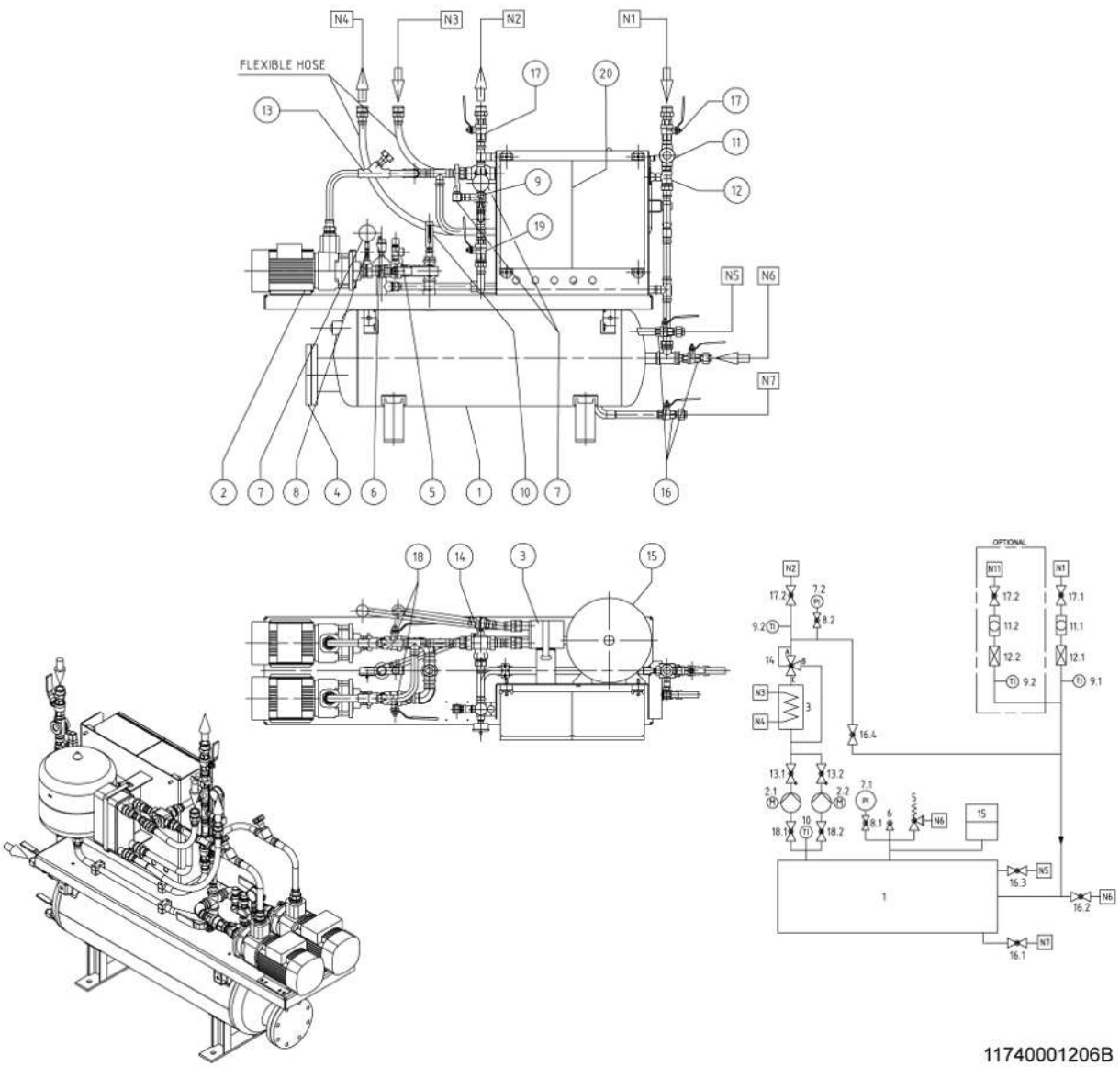

Part list

1 Tank
2 Circulation pump
3 Plate heat exchanger
4 Inspection hatch
5 Safety valve
6 Automatic venting
7 Pressure gauge
8 Valve
9 Thermometer
10 Thermometer

Connections to the nozzle cooling module

N1 Nozzle cooling water return from engine
N2 Nozzle cooling water outlet to engine
N3 Cooling water inlet
N4 Cooling water outlet

11 Sight glass
12 Flow switch set point
13 Valve with non-return
14 Temperature regulating valve
15 Expansion pot
16 Ball type cock
17 Ball type cock
18 Ball type cock
19 Ball type cock
20 Switch cabinet

N5 Check for "oil in water"
N6 Filling connection
N7 Discharge

Figure 138: Example: Compact nozzle cooling water module

2025-06-16 - 1.0

5.6 Cooling water system

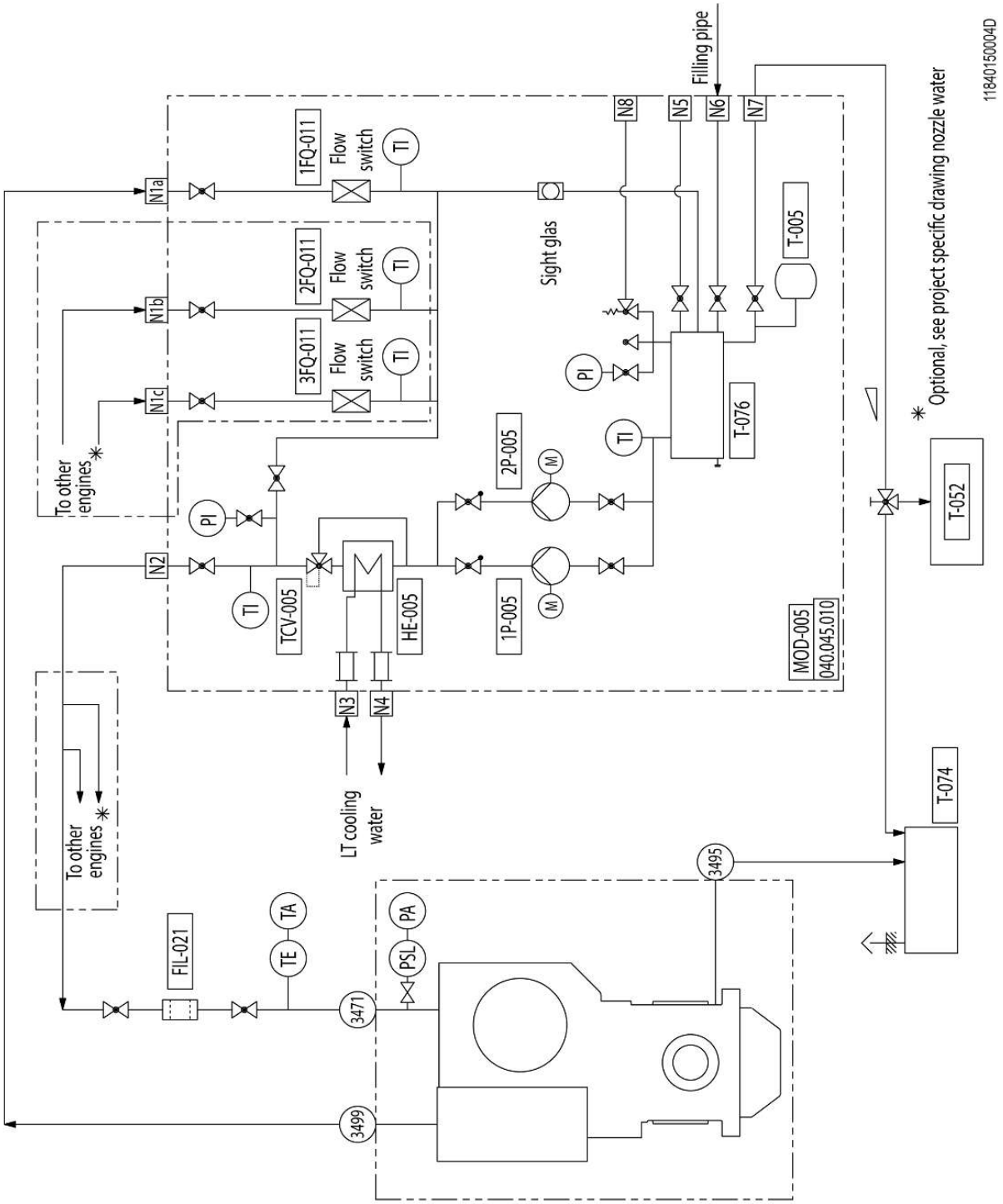

2025-06-16 - 1.0

Components

FIL-021	Strainer for cooling water
1,2,3 FQ-011	Flow switch
HE-005	Nozzle cooling water cooler
MOD-005	Nozzle cooling water module
1,2 P-005	Nozzle cooling water pump
T-005	Nozzle cooling water expansion tank
T-052	Sludge tank
T-074	Fresh water collecting tank
T-076	Nozzle cooling water service tank
TCV-005	Nozzle cooling water temperature control valve

Connection numbers

3471	Nozzle cooling water inlet to engine
3499	Nozzle cooling water outlet from engine
3495	Drain of nozzle cooling water pipe

Connection to the nozzle cooling water module

N1a	Nozzle cooling water inlet a
N1b	Nozzle cooling water inlet b
N1c	Nozzle cooling water inlet c
N2	Nozzle cooling water outlet
N3	LT cooling water inlet
N4	LT cooling water outlet
N5	Sample point for "oil in water"
N6	Filling connection
N7	Drain connection
N8	Connection safety valve, route to safe area

Figure 139: Nozzle cooling water module diagram

5.6.8 External cooling water system – HT cooling water preheating module

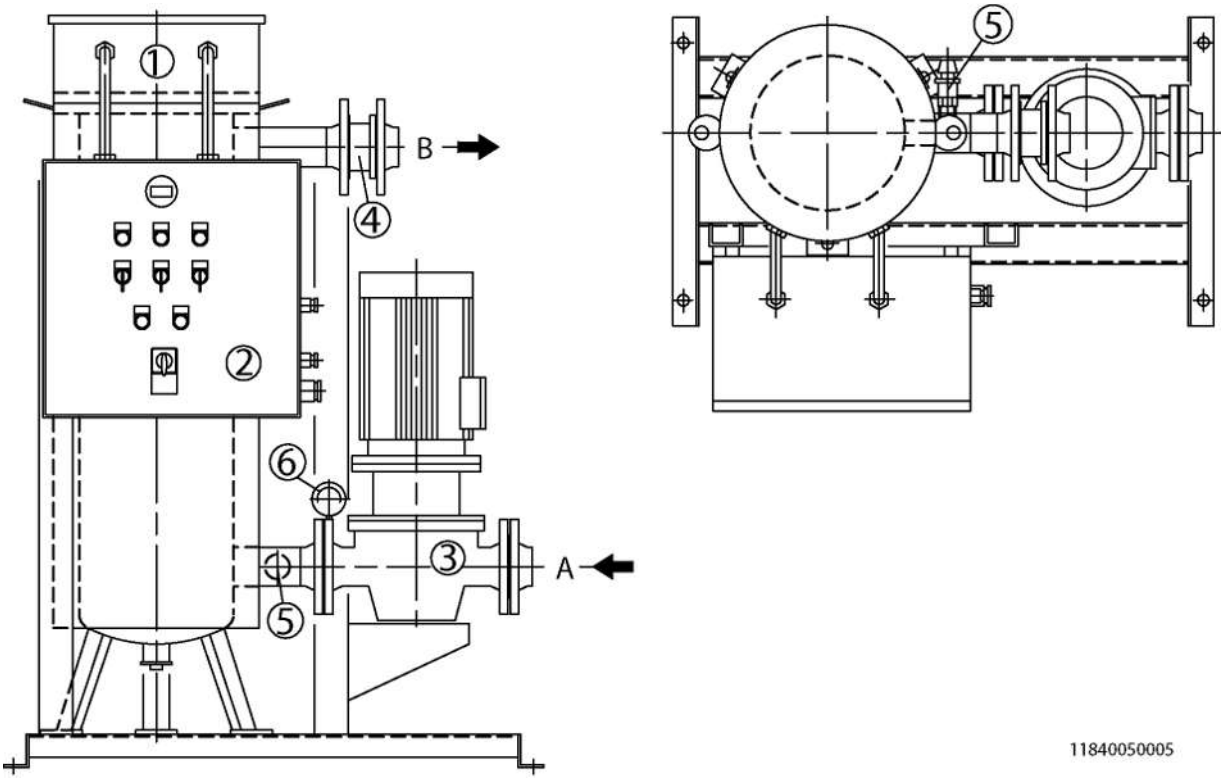

1	Electric flow heater
2	Switch cabinet
3	Circulation pump
4	Non-return valve
5	Safety valve
6	Manometer (filled with glycerin)
A	Cooling water inlet
B	Cooling water outlet

Figure 140: Example – Compact HT cooling water preheating module

2025-06-16 - 1.0

5.7 Bilge water/oily water

5.7.1 Introduction

For operation and maintenance of the engine, several pipes and tanks for supply of fresh water and disposal of bilge/oily water are to be provided.

A water cleaning system for bilge water in accordance with MARPOL requirements and rules of classification societies and local authorities must be installed. Oily water or water treated with chemical additives must not be discharged into the sea.

5.7.2 Turbocharger washing equipment

The turbocharger of engines operating on residual fuel or DMB must be cleaned at regular intervals. This requires the installation of a freshwater supply line from the sanitary fresh water system to the turbine washing equipment and dirty-water drain pipes via a funnel (for visual inspection) to the bilge system. A fresh water connection DN 25 with shut-off valve, pressure reducing device (2–4 bar) with integrated filter and pressure gauge (0–6 bar) is to be provided.

The water lance must be removed after every washing process. This is a precautionary measure, which serves to prevent an inadvertent admission of water to the turbocharger.

The turbocharger washing equipment is completely mounted on the turbocharger.

For further information contact MAN Energy Solutions.

2025-06-16 - 1.0

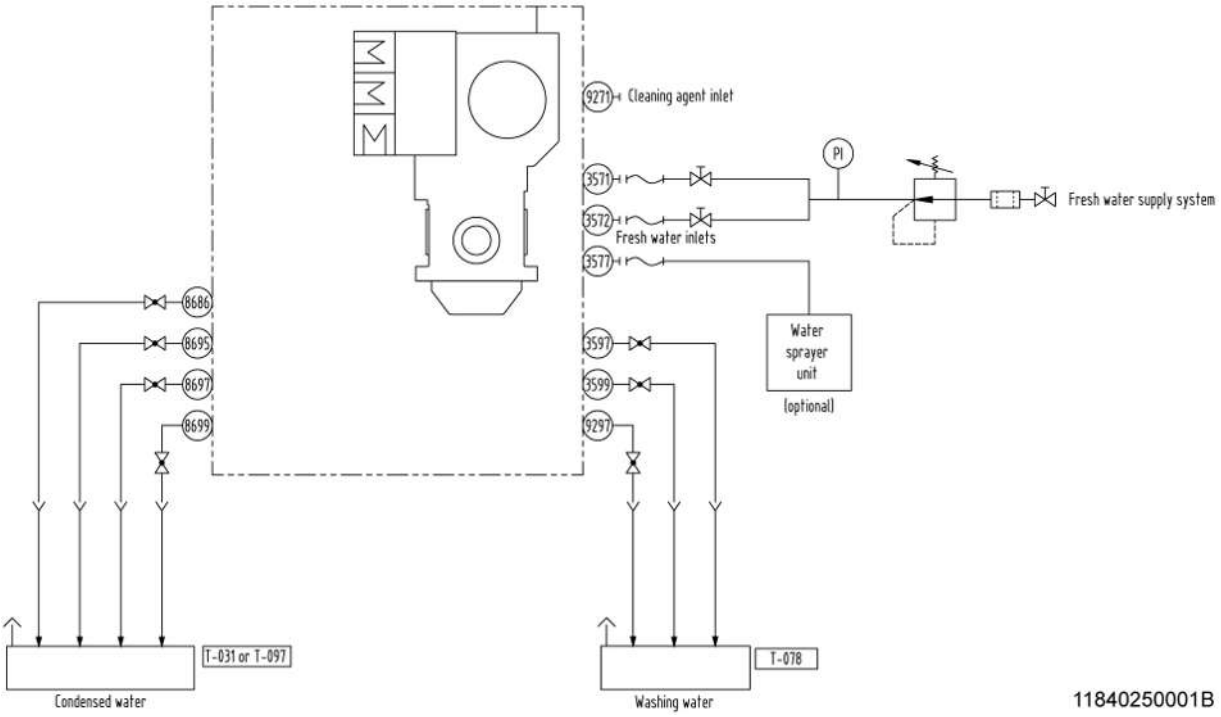

	Components		
T-031	Condensate collecting tank	T-097	Bilge
T-078	Waste water tank		
	Sanitary water engine connections		
3571	Inlet connection for turbine cleaning device wet	3597	Dirty water drain from turbocharger
3572	Inlet connection for turbine cleaning device wet	3599	Dirty water drain from turbocharger
3577	Inlet connection for compressor cleaning device wet		
	Condensed water engine connections		
8686	Condensed water drain from charge air manifold	8697	Condensed water drain
8695	Condensed water drain	8699	Condensed water drain from charge air manifold
	Washing water engine connections		
9271	Charge air cooler cleaning agent inlet	9297	Charge air cooler cleaning agent drain

Figure 141: P&ID washing water/condensed water

2025-06-16 - 1.0

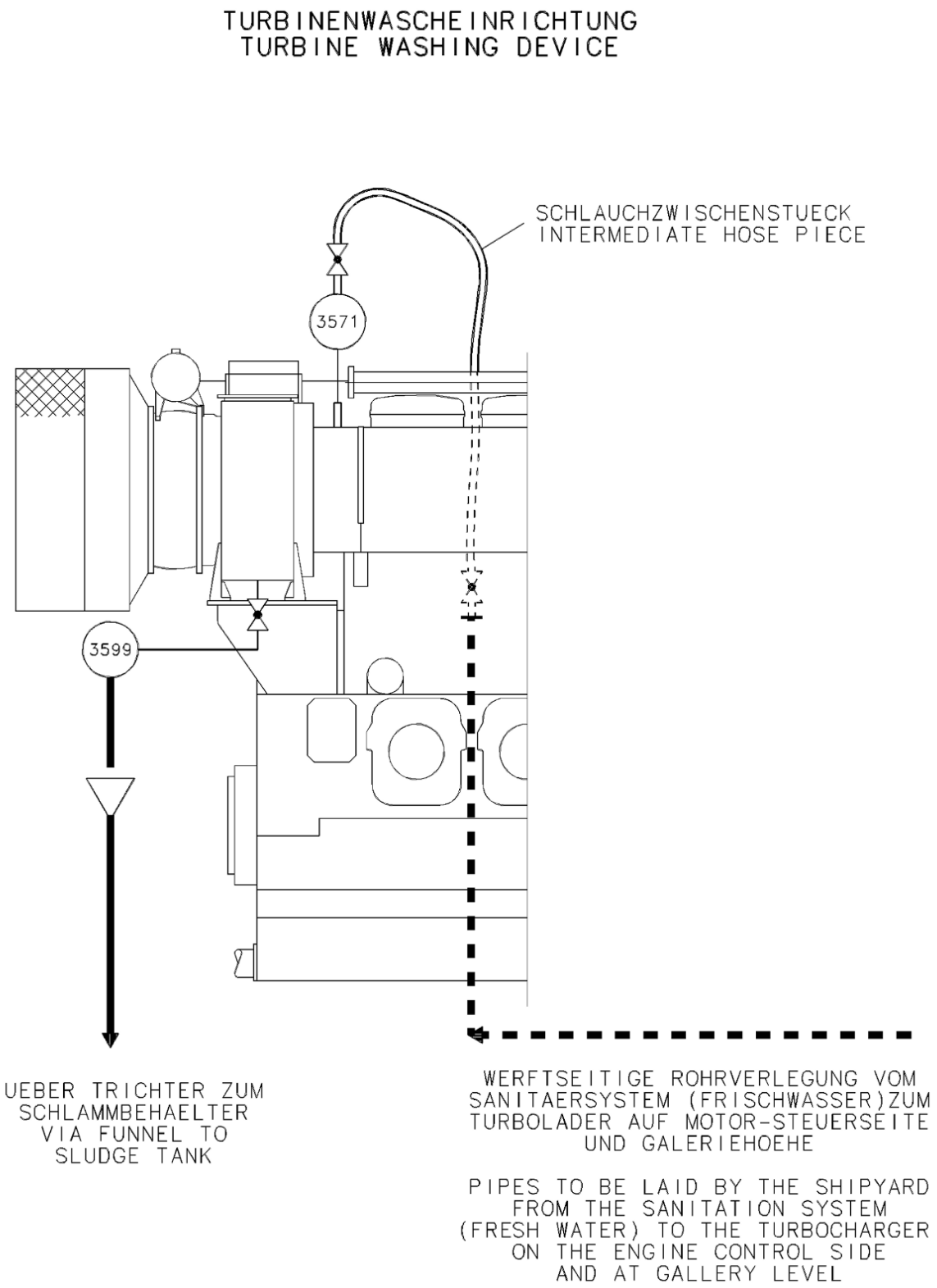

Figure 142: Cleaning turbine

2025-06-16 - 1.0

5.7.3 Cleaning of charge air cooler

The cooler bundle can be cleaned without being removed. Prior to filling with cleaning solvent, the charge air cooler and its adjacent housings must be separated from the turbocharger and charge air pipe using blind flanges.

- The casing must be filled and drained with a firehose with shut-off valve.
- If the cooler bundle is contaminated with oil, the charge air cooler casing is to be filled with freshwater and a liquid detergent additive.
- Insert the ultrasonic cleaning device after addition of the cleaning agent in default dosing portion.
- Flush with freshwater at least two times.

The contaminated water must be removed after every sequence and drained into the bilge or an oily/dirty water tank.

Recommended cleaning medium:

"PrimeServClean C 0186"

Note:
When using cleaning agents:
The instructions of the manufacturers must be observed. In particular the data sheets with safety relevance must be followed. The temperature of these products has (due to the fact that some of them are inflammable) to be at least 10 °C lower than the respective flash point. The waste disposal instructions of the manufacturers must be observed. All terms and conditions of the classification societies as well as MARPOL requirements must be fulfilled.

2025-06-16 - 1.0

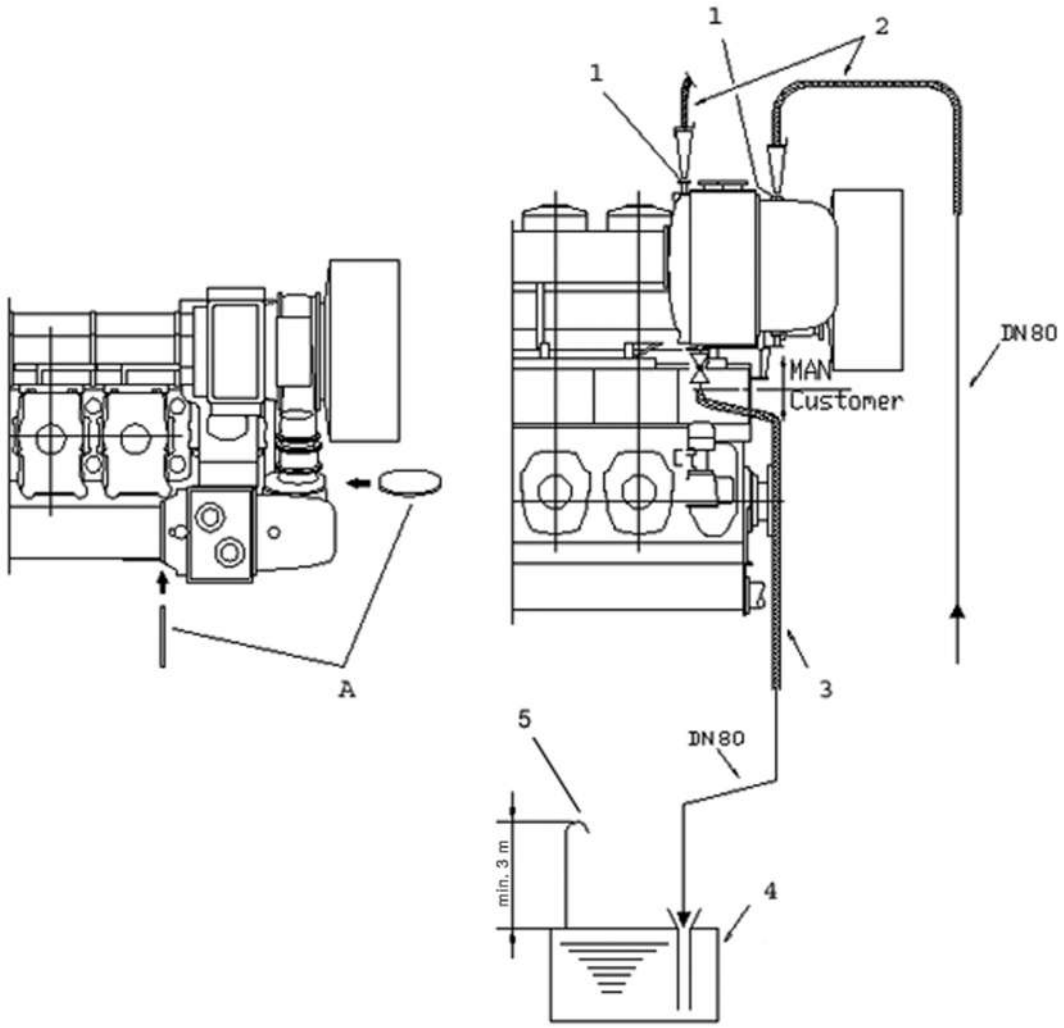

1 Installation ultrasonic cleaning

2 Firehose with sprag nozzle

3 Firehose

4 Dirty water collecting tank.
Required size of dirty water collecting tank: Volume at the least 4-multiple charge air cooler volume.

5 Ventilation

A Isolation with blind flanges

Figure 143: Principle layout

5.7.4 Condensate monitoring tank drain

The condensate deposition in the charge air cooler is drained via the condensate monitoring tank. The condensate can be drained to the bilge.

If sailing mainly in tropical areas with high amount of condensate, the installation of a separate condensate holding tank might be useful to avoid the unnecessary use of an oily water separator. This condensate might be directly discharged to the sea. Nevertheless, oil monitoring of the condensate is mandatory.

2025-06-16 - 1.0

5.7.5 Nozzle cooling water drain

It might occur, that the nozzle cooling water becomes contaminated with fuel oil due to a nozzle failure.

For such an event, a draining possibility to the sludge tank should be provided. As the cooling water volume is quite low, the draining can be done manually (e.g. with a bucket or a temporary hose).

5.7.6 Condensate drain starting air system

The condensed water from condensate traps related to the starting air system may be led to the bilge. The function of the drains should be monitorable (e.g. via funnels, sight glasses or other devices).

2025-06-16 - 1.0

5.8 Fuel oil system

5.8.1 Internal fuel system

See overleaf

2025-06-16 - 1.0

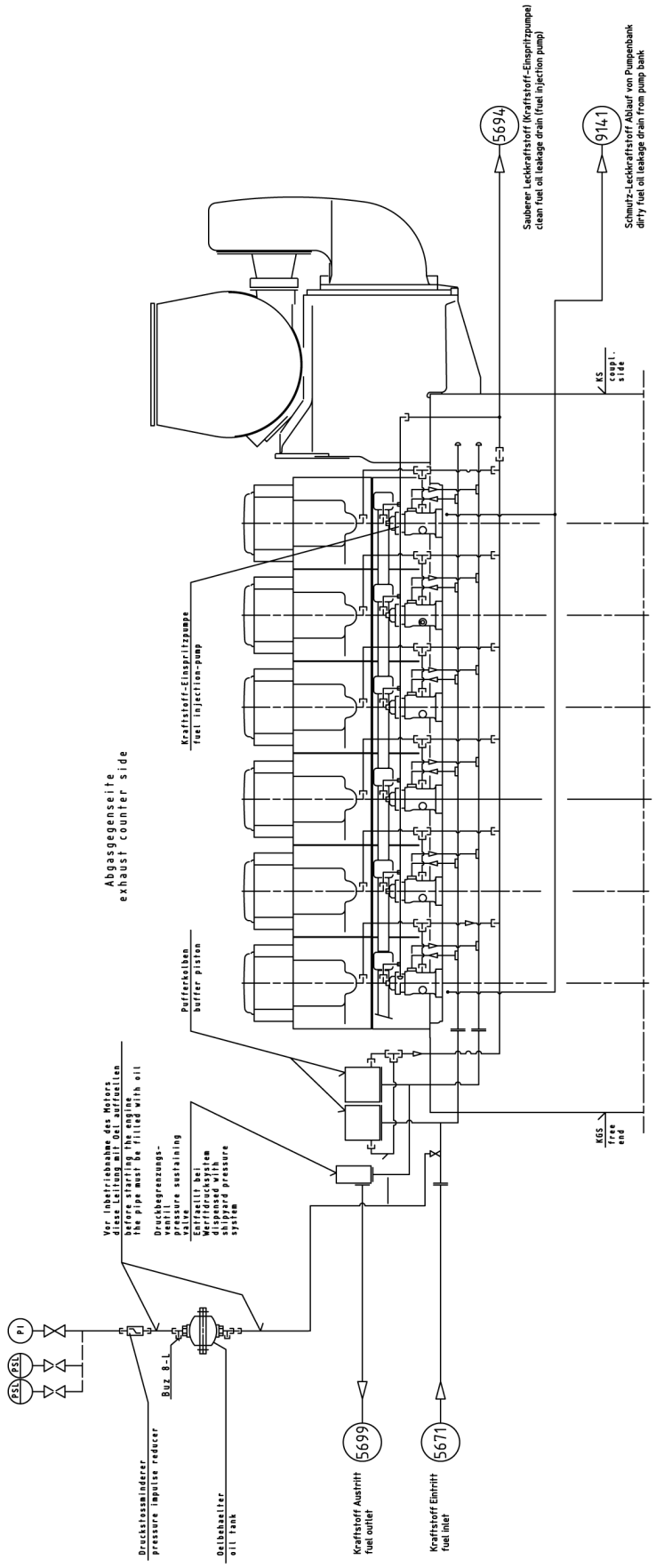
5694
Sauberer Leckkraftstoff (Kraftstoff-Einspritzpumpe)
clean fuel oil leakage drain (fuel injection pump)
9141
Schmutz-Leckkraftstoff Ablauf von Pumpenbank
dirty fuel oil leakage drain from pump bank
KS
coupl. side
Kraftstoff-Einspritzpumpe
fuel injection-pump
Abgasgegenseite
exhaust counter side
Pufferkolben
buffer piston
KGS
free end
Vor Inbetriebnahme des Motors
diese Leitung mit Öl auffüllen
before starting the engine
the pipe must be filled with oil
Druckbegrenzungs-
ventil
pressure sustaining
valve
Entfällt bei
Werftdrucksystem
dispensed with
shipyard pressure
system
PI
PSL
PSL
Bug B-L
5699
5671
Druckstossminderer
pressure impulse reducer
Oelbehälter
oil tank
Kraftstoff Austritt
fuel outlet
Kraftstoff Eintritt
fuel inlet
11434001880B

2025-06-16 - 1.0

5699 Fuel outlet

5671 Fuel inlet

5694 Clean fuel oil leakage drain (fuel injection pump)

9141 Dirty fuel oil leakage drain from pump bank

Figure 144: Internal fuel system – Exemplary

Note:
The drawing shows the basic internal media flow of the engine in general.
Project-specific drawings thereof don't exist.

5.8.2 External fuel system – DMB (Marine diesel oil) treatment system

A prerequisite for safe and reliable engine operation with a minimum of servicing is a properly designed and well-functioning fuel oil treatment system.

The schematic diagram, see figure DMB treatment system diagram, Page 366 shows the system components required for fuel oil treatment for marine diesel oil (DMB).

T-015/Diesel fuel oil storage tank

The minimum effective capacity of the tank should be sufficient for the operation of the propulsion plant, as well as for the operation of the auxiliary diesels for the maximum duration of voyage including the resulting sediments and water. Regarding the tank design, the requirements of the respective classification society are to be observed.

Tank heating

The tank heater must be designed so that the DMB in it is at a temperature of at least 10°C minimum above the pour point. The supply of the heating medium must be automatically controlled as a function of the DMB temperature.

Fuel with biodiesel

In case fuel oils with up to 100% of biodiesel (FAME) are used, there is an increased risk of degradation especially due to microbial activity which can threaten engine performance. In order to minimise this risk, long storage periods of this fuel have to be avoided. Furthermore all distillate tanks are to be supplied with a drainage system to prevent bacterial growth by water accumulation. To increase the water separation, a coalescer unit could be installed as a parallel installation on the most critical tanks (not indicated in the diagram).

Tank venting

In case of longer storage of diesel fuel oil, a technical device (for example, air dryer) should be installed to prevent condensation of water in the fuel oil tanks due to humidity.

T-021/Sludge tank

If disposal by an incinerator plant is not planned, the tank has to be dimensioned so that it is capable of absorbing all residues which accumulate during the operation in the course of a maximum duration of voyage. The content of this tank must not be added to the engine fuel oil. In order to enable the emptying of the tank, it must be heated.

The heating is to be dimensioned so that the content of the tank can be heated to approximately 40 °C.

2025-06-16 - 1.0

P-073/Diesel fuel oil separator feed pump

The diesel fuel oil separator feed pump should always be electrically driven, i.e. not mounted on the separator, as the delivery volume can be matched better to the required throughput.

H-019/Fuel oil preheater

In order to achieve the separating temperature, a separator adapted to suit the fuel oil viscosity should be fitted.

The preheater must be able to heat the diesel oil up to 40 °C and the size must be selected according to the maximum throughput. However the medium temperature prescribed in the separator manual must be observed and adjusted.

CF-003/Diesel fuel oil separator

A self-cleaning separator must be provided. The diesel fuel oil separator is dimensioned in accordance with the separator manufacturers' guidelines.

The required flow rate (Q) can be roughly determined by the following equation:

$$Q = \frac{P \times b_e}{\rho}$$

Q [l/h]	Separator flow rate
P [kW]	Total engine output
b_e [g/kWh]	Fuel oil consumption
ρ [g/l]	Density at separating temp approximately 870 kg/m^3 = [g/l]

With the evaluated flow rate, the size of the separator has to be selected according to the evaluation table of the manufacturer. The separator rating stated by the manufacturer should be higher than the flow rate (Q) calculated according to the above formula.

For the first estimation of the maximum fuel oil consumption (b_e), increase the specific table value by 15%, see section Planning data, Page 107.

For project-specific values contact MAN Energy Solutions.

In the following, characteristics affecting the fuel oil consumption are listed exemplary:

- Tropical conditions
- The engine-mounted pumps
- Fluctuations of the calorific value (Especially when using biofuels and synthetic fuels)
- The consumption tolerance

Regarding required limits on water and particles in the fuel after separation refer to table Requirements for diesel fuel.

Note:
If a homogeniser is used, it must never be installed between the settling tank and separator as otherwise it will not be possible to ensure satisfactory separation of harmful contaminants, particularly seawater.

2025-06-16 - 1.0

Withdrawal points for samples

Fuel oil sampling points are to be provided upstream and downstream of each separator, to verify the effectiveness of these system components.

T-003/Diesel fuel oil service tank

See description in section External fuel system – Heavy fuel oil (HFO) supply system, Page 382.

T-071/Clean leakage fuel oil tank

See description in paragraph T-071/Clean leakage fuel oil tank, Page 389.

2025-06-16 - 1.0

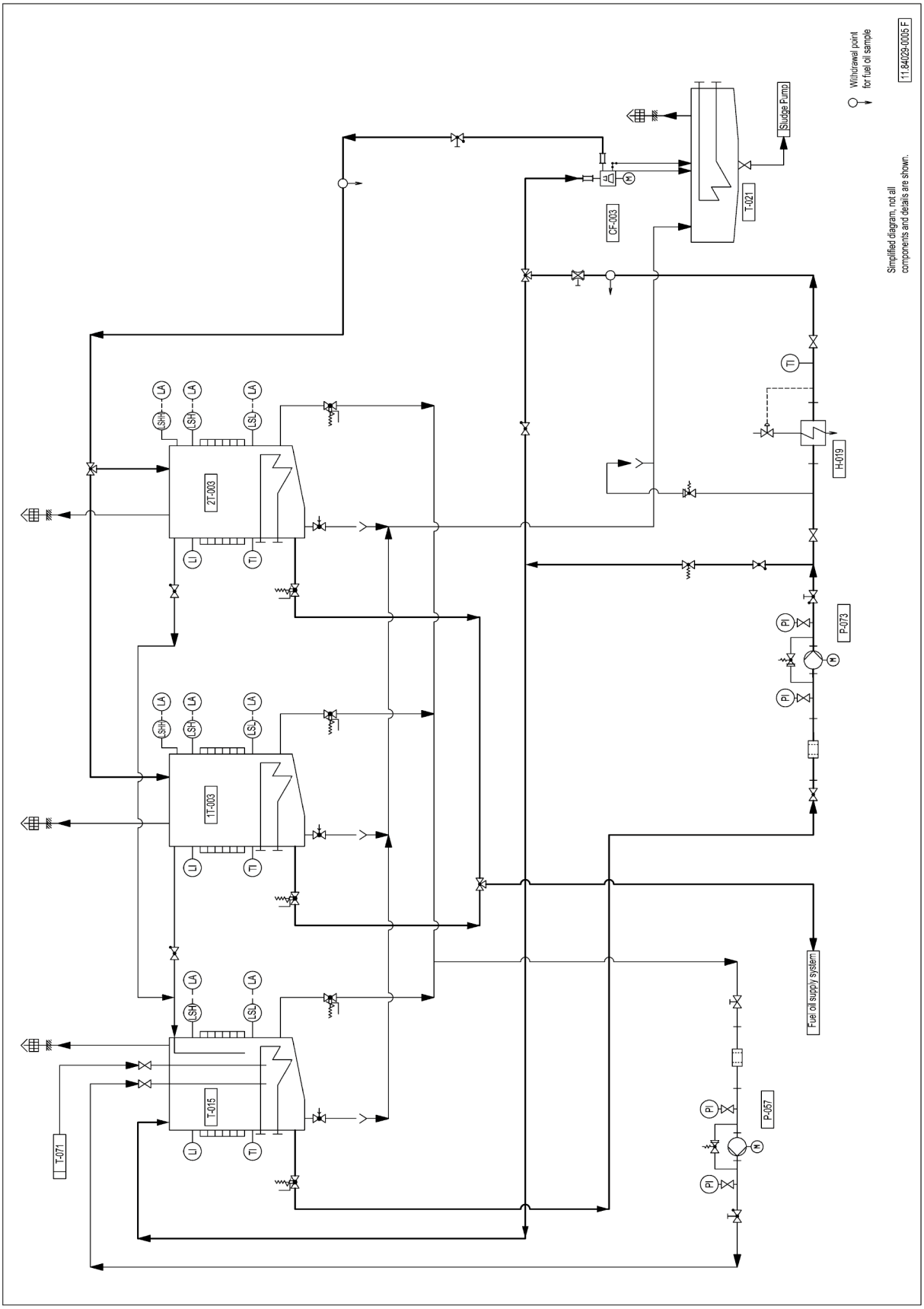
Withdrawal point for fuel oil sample
11.84029-0005 F
Simplified diagram, not all components and details are shown.
Sludge Pump
T-021
CF-003
H-019
P-073
P-057
Fuel oil supply system
2T-003
1T-003
T-015
T-071
LI
TI
PI
LA
SH
SHH
SL
LSL

2025-06-16 - 1.0

Components

CF-003	Diesel fuel oil separator	T-015	Diesel fuel oil storage tank
H-019	Fuel oil preheater	T-021	Sludge tank
P-057	Diesel fuel oil transfer pump	1,2 T-003	Diesel fuel oil service tank
P-073	Diesel fuel oil separator feed pump	T-071	Clean leakage fuel oil tank

Figure 145: Fuel oil treatment with separator CF-003

5.8.3 External fuel system – Marine diesel oil (MDO) supply system for diesel engines

General

The MDO supply system is an open system with open deaeration service tank. Usually one or two main engines are connected to one fuel system. If required auxiliary engines can be connected to the same fuel system as well (not indicated in the diagram).

MDO fuel oil viscosity

MDO-DMB and FAME with a max. nominal viscosity of 11 cSt (at 40°C), or lighter MDO qualities, can be used.

At engine inlet the fuel oil viscosity should be 11 cSt or less. The fuel temperature has to be adapted accordingly. It is also to ensure, that the MDO fuel temperature of max. 45°C at engine inlet (for all MDO qualities) is not exceeded. Therefore, a tank heating and a cooler in the fuel return pipe are required.

T-003/Diesel fuel oil service tank

The classification societies specify that at least two service tanks are to be installed on board. The minimum tank capacity of each tank should, in addition to the MDO consumption of other consumers, enable a full load operation of min. 8 operating hours for all engines under all conditions.

The tank should be provided with a sludge space with a tank bottom inclination of preferably 10° and sludge drain valves at the lowest point. An overflow pipe from the diesel fuel oil service tank T-003 to the diesel fuel oil storage tank T-015 including heating coils and insulation is to be installed.

If DMB and FAME fuel with 11 cSt (at 40°C) is used, the tank heating is to be designed to keep the tank temperature at min. 40°C.

For lighter types of fuel oil it is recommended to adjust the tank temperature in order to ensure a fuel oil viscosity of 11 cSt or less. Rules and regulations for tanks issued by the classification societies must be observed.

The required minimum MDO capacity of each service tank is:

$V_{MDOST} = (Q_p \times t_o \times M_s)/(3 \times 1{,}000\ l/m^3)$		
Required min. volume of one diesel fuel oil service tank	V_{MDOST}	m^3
Required supply pump capacity, MDO 45°C See paragraph P-008/Diesel fuel oil supply pump, Page 369	Q_p	l/h
Operating time t_o = 8 h	t_o	h

2025-06-16 - 1.0

Margin for sludge M_s = 1.05	M_s	-

Table 166: Required minimum MDO capacity

In case more than one engine or different engines are connected to the same fuel oil system, the service tank capacity has to be increased accordingly.

STR-010/Suction strainer

To protect the fuel oil supply pumps, an approximately 0.5 mm gauge (sphere-passing mesh) strainer is to be installed at the suction side of each supply pump.

P-008/Diesel fuel oil supply pump

To cool the engine mounted injection pumps, the capacity of the supply pumps must be at least 300% of the maximum fuel oil consumption.

$Q_P = (P \times (br_{ISO} / 1{,}000) \times f \times S) / \rho$		
Required booster pump delivery capacity	Q_P	m^3/h
Engine output at 100% MCR	P	kW
Specific engine fuel oil consumption (ISO) at 100% MCR	br_{ISO}	g/kWh
Factor for pump dimensioning	f = 3	-
Safety factor for consideration of attached pumps and tropical conditions	S = 1.1	-
Min. fuel density @ 15°C	ρ	kg/m^3
Note: The fuel density shall be chosen according the fuel with the lowest density, for which the system is designed for (in general DMA, min. density 820 kg/m^3 @ 15°C). In case more than one engine is connected to the same fuel oil system, the pump capacity has to be increased accordingly.		

Table 167: Simplified fuel oil booster pump dimensioning

FIL-003/Fuel oil automatic filter, supply circuit

The automatic filter should be a type that causes no significant pressure drop during flushing sequence. As a reference an acceptable value for a pressure decrease during back flushing is 0.3 – 0.5 bar. The filter mesh size shall be 0.010 mm (absolute) for common rail injection and 0.034 mm (absolute) for conventional injection.

The automatic filter must be equipped with differential pressure indication and switches.

The design criterion relies on the filter surface load, specified by the filter manufacturer.

A by-pass pipe in parallel to the automatic filter is required. A stand-by filter in the by-pass is not required. In case of maintenance on the automatic filter, the by-pass is to be opened; the fuel is then filtered by the fuel oil duplex filter FIL-013.

FIL-013/Fuel oil duplex filter

See description in paragraph FIL-013/Fuel oil duplex filter, Page 387.

2025-06-16 - 1.0

FQ-003/Fuel oil flowmeter

For a fuel oil consumption measurement (not mentioned in the diagram), flowmeters have to be installed upstream and downstream of the engine. The measured difference of these flows equals the consumption.

The upstream flow rate of each engine should be displayed in the ship automation and SaCoS system. Each flowmeter requires a by-pass to ensure a continuous fuel oil flow in case of maintenance or malfunction. A coriolis type flowmeter is recommended for fuel oil flow measuring. The by-pass of the coriolis type flowmeter needs a shut-off valve. If a positive displacement type flowmeter is used the by-pass needs to be equipped with a spring loaded overflow valve which opens automatically in case of blocking. The pressure resistance of the fuel oil flowmeter should be as low as possible and considered during the system design stage.

FBV-010/Flow balancing valve

MDO supply system for only one main engine and without auxiliary engines	The flow balancing valve FBV-010 is not required.
MDO supply system for more than one main engine or/and additional auxiliary engines	The flow balancing valve (1,2 FBV-010) is required at the fuel outlet of each engine. It is used to adjust the individual fuel flow for each engine. It will compensate the influence (flow distribution due to pressure losses) of the piping system. Once these valves are adjusted, they have to be blocked and must not be manipulated later.

PCV-011/Fuel oil spill valve

MDO supply systems for only one main engine and without auxiliary engines	Fuel oil spill valve PCV-011 is not required.
MDO supply systems for more than one main engine or/and additional auxiliary engines	In case two engines are operated with one fuel module, it has to be possible to separate one engine at a time from the fuel circuit for maintenance purposes. In order to avoid a pressure increase in the pressurised system, the fuel, which cannot circulate through the shut-off engine, has to be rerouted via this valve into the return pipe. This valve is to be adjusted so that rerouting is effected only when the pressure, in comparison to normal operation (multi-engine operation), is exceeded. This valve should be designed as a pressure relief valve, not as a safety valve.

V-002/Shut-off cock

MDO supply systems for only one main engine and without auxiliary engines	Shut-off cock V-002 is not required.
MDO supply systems for more than one main engine or/and additional auxiliary engines	The shut-off cock is closed during normal operation (multi-engine operation). When one engine is separated from the fuel circuit for maintenance purposes, this cock has to be opened manually.

2025-06-16 - 1.0

HE-007/Fuel oil cooler

The fuel oil cooler is required to cool down the fuel, which was heated up while circulating through the injection pumps. The cooler is normally connected to the LT cooling water system and should be dimensioned so that the MDO does not exceed a temperature of max. 45 °C.

Only for very light MDO fuel types this temperature has to be even lower in order to preserve the minimum admissible fuel oil viscosity on engine inlet.

Depending on the fuel oil type a chiller unit might be required to decrease the fuel oil temperature to reach the required injection system operation viscosity, see section Viscosity-temperature diagram (VT diagram), Page 278.

The thermal design of the cooler is based on the following data:

$P_c = P_1 x\ br_{ISO1} x\ f_1$		
$Q_c = P_1 x\ br_{ISO1} x\ f_2$		
Cooler outlet temperature MDO[1] T_{out} = 45 °C	T_{out}	°C
Dissipated heat of the cooler	P_c	kW
MDO flow for thermal dimensioning of the cooler[2]	Q_c	l/h
Engine output power at 100 % MCR	P_1	kW
Specific engine fuel oil consumption (ISO) at 100 % MCR	br_{ISO1}	g/kWh
Factor for heat dissipation: $f_1 = 2.68 \times 10^{-5}$	f_1	-
Factor for MDO flow: $f_2 = 2.80 \times 10^{-3}$	f_2	l/g

Note:
In case more than one engine, or different engines are connected to the same fuel oil system, the cooler capacity has to be increased accordingly.

[1] This temperature has to be normally max. 45 °C. Only for very light MGO fuel types this temperature has to be even lower in order to preserve the min. admissible fuel oil viscosity in engine inlet (see section Viscosity-temperature diagram (VT diagram), Page 278).

[2] The max. MDO/MGO throughput is identical to the delivery quantity of the installed fuel oil booster pump P-003.

Table 168: Calculation of cooler design

The recommended pressure class of the fuel oil cooler is PN16.

PCV-008/Pressure retaining valve

In open fuel oil supply systems (fuel loop with circulation through the diesel fuel oil service tank; service tank under atmospheric pressure) this pressure-retaining valve is required to keep the system pressure to a certain value against the diesel fuel oil service tank. It is to be adjusted so that the pressure before engine inlet can be maintained in the required range (see section Operating/service temperatures and pressures, Page 152).

FSH-001/Leakage fuel oil monitoring tank

High pressure pump overflow and escaping fuel oil from burst control pipes is carried to the monitoring tanks from which it is drained into the clean leakage fuel oil collecting tank. The engine interface connection of the monitoring tank is a pressureless drain. Leakage fuel oil flows by gravity only from these tank into collecting tanks (to be installed below the engine connections). To prevent pressure resistance at the engine interface connection the pipework to the

2025-06-16 - 1.0

collecting tank has to have a sufficient downward slope. The float switch mounted in the tanks must be connected to the alarm system. The classification societies require the installation of monitoring tanks for unmanned engine rooms. Lloyd's Register specifies tank monitoring for manned engine rooms as well.

T-006/Leakage oil collecting tank

Leakage fuel oil from the injection pipes, leakage lubrication oil and dirt fuel oil from the filters (to be discharged by gravity) are collected in the leakage oil collecting tank (T-006). The content of this tank has to be discharged into the sludge tank (T-021) or it can be burned for instance in a waste oil boiler. It is not permissible to add the content of the tank to the fuel treatment system again because of contamination with lubrication oil.

If leakage fuel oil can flow directly into the sludge tank (T-021) by gravity leakage collecting tank (T-006) does not need to be installed.

Withdrawal points for samples

Fuel oil sampling points are to be provided upstream and downstream of each filter, to verify the effectiveness of these system components.

T-071/Clean leakage fuel oil tank

When only MDO is used, the high pressure pump overflow and other, clean fuel oil that escapes from the conventional injection system is lead pressureless (by gravity only) to an extra clean leakage fuel oil collecting tank. From there it can be emptied into the diesel fuel oil storage tank. Clean leakage fuel oil from T-071 can be used again after passing the separator. For additional information see description in section Heavy fuel oil (HFO) supply system, Page 382.

T-015/Diesel fuel oil storage tank

See description in paragraph T-015/Diesel fuel oil storage tank, Page 364.

T-021/Sludge tank

See description in paragraph T-021/Sludge tank, Page 364.

CF-003/Diesel fuel oil separator

See description in paragraph CF-003/Diesel fuel oil separator, Page 365.

Piping

The fuel oil system design pressure is PN16 (see section External pipe dimensioning, Page 294). The system is to be protected from higher pressure levels by corresponding safety valves. Additional safety valves, not displayed in the P&ID, might become necessary depending on the actual fuel oil system design.

Material

The casing material of pumps and filters should be EN-GJS (nodular cast iron), in accordance to the requirements of the classification societies.

2025-06-16 - 1.0

General notes

The arrangement of the final fuel filter directly upstream of the engine inlet (depending on the plant design the final filter could be either the fuel oil duplex filter FIL-013 or the fuel oil automatic filter (supply circuit) FIL-003) has to ensure that no parts of the filter itself can be loosen.

The pipe between the final filter and the engine inlet has to be done as short as possible and is to be cleaned and treated with particular care to prevent damages (loosen objects/parts) to the engine. Valves or components shall not be installed in this pipe. It is required to dismantle this pipe completely in presents of our commissioning personnel for a complete visual inspection of all internal parts before the first engine start. Therefore, flange pairs have to be provided on eventually installed bends.

2025-06-16 - 1.0

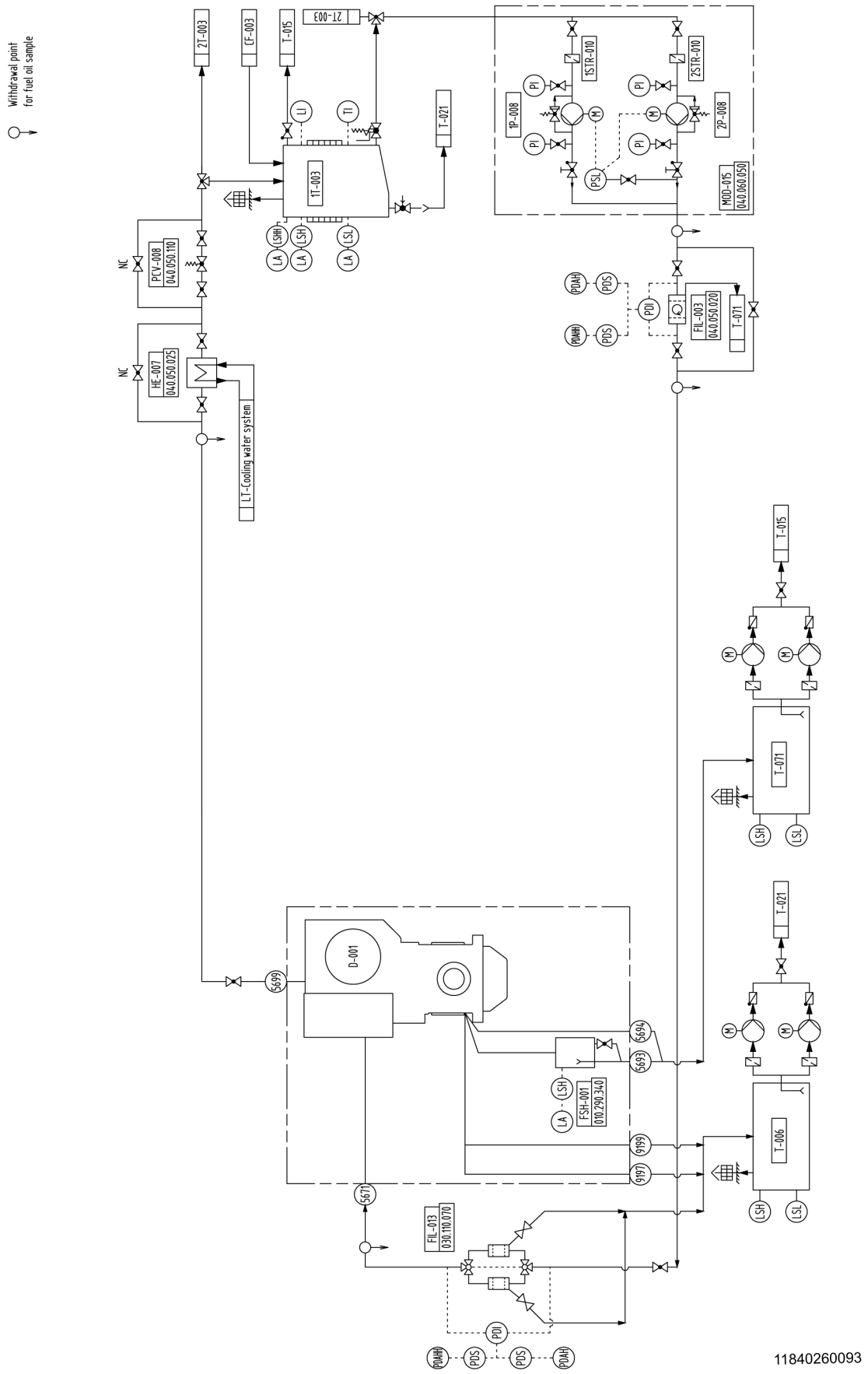
Withdrawal point
for fuel oil sample
2T-003
CF-003
T-015
ZT-003
LI
TI
1T-003
T-021
1P-008
1STR-010
2STR-010
2P-008
PI
PSL
M
MOD-015
040.060.050
LA
LSH
LSL
NC
PCV-008
040.050.110
HE-007
040.050.025
LT-Cooling water system
PDAH
PDS
PDI
FIL-003
040.050.020
T-071
T-015
T-071
T-021
T-006
D-001
5699
5694
5693
FSH-001
010.290.340
9199
9197
5671
FIL-013
030.110.070
11840260093

2025-06-16 - 1.0

	Components		
CF-003	Diesel fuel oil separator	1,2 P-008	Diesel fuel oil supply pump
D-001	Diesel engine	1,2 STR-010	Suction strainer
FIL-003	Fuel oil automatic filter, supply circuit	1,2 T-003	Diesel fuel oil service tank
FIL-013	Fuel oil duplex filter	T-006	Leakage oil collecting tank
FSH-001	Leakage fuel oil monitoring tank	T-015	Diesel fuel oil storage tank
HE-007	Fuel oil cooler	T-021	Sludge tank
MOD-015	Fuel oil supply pump unit	T-071	Clean leakage fuel oil tank
PCV-008	Pressure retaining valve		
	Major engine connections		
5671	Fuel oil inlet to engine	5699	Fuel oil outlet from engine
5693	Fuel oil break leakage drain 1	9197	Dirty oil drain from pump bank, counter coupling side 2
5694	Fuel oil leakage drain (reusable from pumps and injectors) 1	9199	Dirty oil drain from pump bank, counter coupling side 1

Figure 146: MDO supply system diagram – Single engine plant

2025-06-16 - 1.0

5.8 Fuel oil system

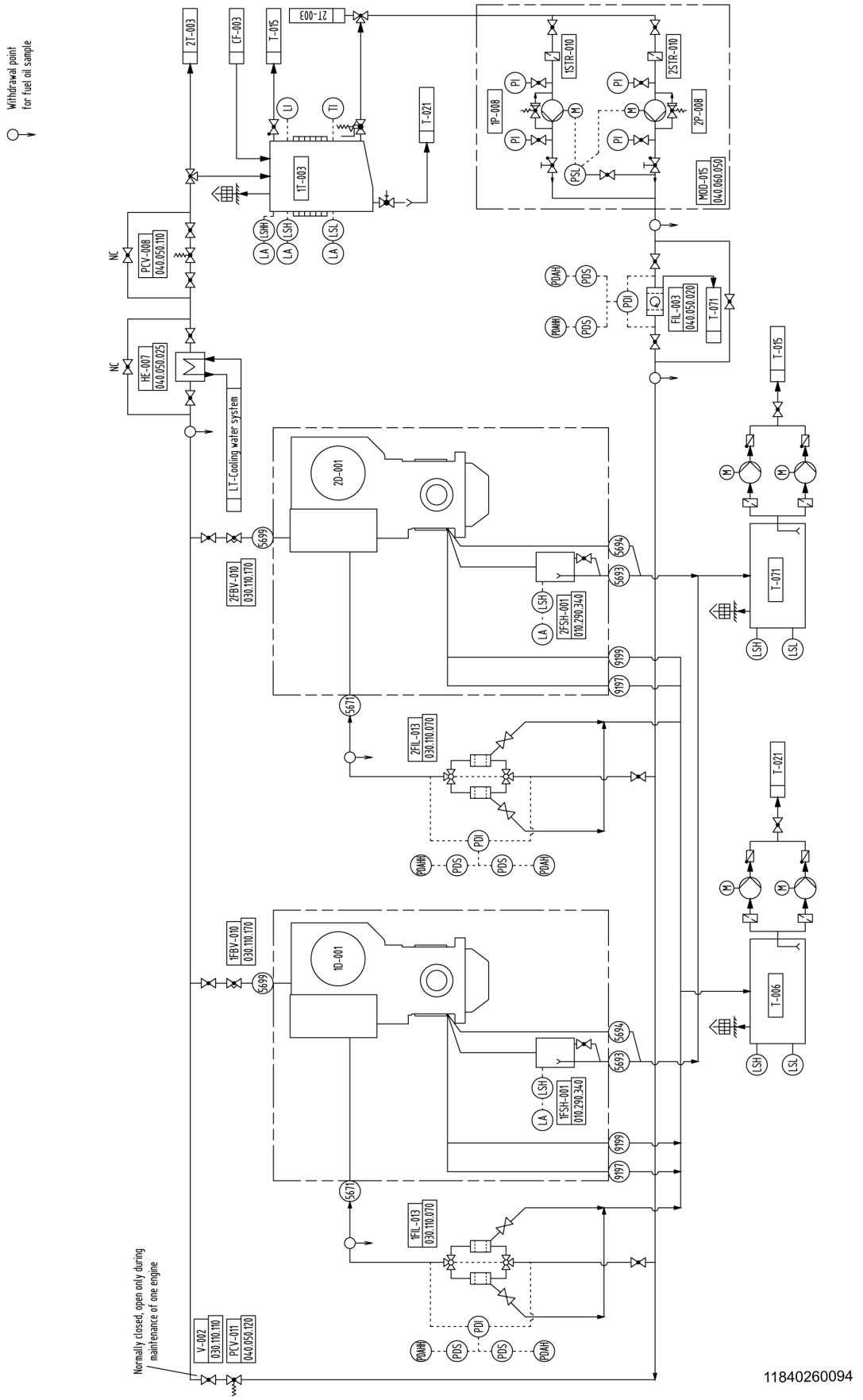

2025-06-16 - 1.0

	Components		
CF-003	Diesel fuel oil separator	PCV-011	Fuel oil spill valve
1,2 D-001	Diesel engine	1,2 P-008	Diesel fuel oil supply pump
1,2 FBV-010	Flow balancing valve	1,2 STR-010	Suction strainer
FIL-003	Fuel oil automatic filter, supply circuit	1,2 T-003	Diesel fuel oil service tank
1,2 FIL-013	Fuel oil duplex filter	T-006	Leakage oil collecting tank
1,2 FSH-001	Leakage fuel oil monitoring tank	T-015	Diesel fuel oil storage tank
HE-007	Fuel oil cooler	T-021	Sludge tank
MOD-015	Fuel oil supply pump unit	T-071	Clean leakage fuel oil tank
PCV-008	Pressure retaining valve	V-002	Shut-off valve
	Major engine connections		
5671	Fuel oil inlet to engine	5699	Fuel oil outlet from engine
5693	Fuel oil break leakage drain 1	9197	Dirty oil drain from pump bank, counter coupling side 2
5694	Fuel oil leakage drain (reusable from pumps and injectors) 1	9199	Dirty oil drain from pump bank, counter coupling side 1

Figure 147: MDO supply system diagram – Twin engine plant

5.8.4 External fuel system – Residual fuel (HFO) treatment system

A prerequisite for safe and reliable engine operation with a minimum of servicing is a properly designed and well-functioning fuel oil treatment system.

The schematic diagram, see figure Residual fuel (HFO) treatment system diagram shows the system components required for fuel treatment of residual fuel oil (HFO).

Bunker fuel oil

Fuel compatibility problems are avoidable if mixing of newly bunkered fuel oil with remaining fuel oil can be prevented by a suitable number of bunkers. Moreover the overall fuel oil system (all fuel oil tanks, piping and so on) must be designed to limit mixing of different bunker batches to an absolute minimum. Heating coils in bunkers must be designed so that the HFO in it is at a temperature of at least 10°C minimum above the pour point.

P-038/HFO transfer pump

The HFO transfer pump discharges fuel from the bunkers into the HFO settling tanks. Being a screw pump, it handles the fuel oil gently, thus prevent water being emulsified in the fuel oil. Its capacity must be sized to fill the complete HFO settling tank within ≤ 2 hours.

T-016/Residual fuel (HFO) settling tank

Two HFO settling tanks should be installed, in order to obtain thorough precleaning and to allow fuels of different origin to be kept separate. When using RM-fuels we recommend two HFO settling tanks for each fuel type (high sulphur HFO, low sulphur HFO).

Size

Pre-cleaning by settling is the more effective the longer the solid material is given time to settle. The storage capacity of the HFO settling tank should be designed to hold at least a 24-hour supply of fuel oil at full load operation, including sediments and water the fuel oil contains.

The minimum volume (V) to be provided is:

2025-06-16 - 1.0

$$V = \frac{5.7 \times P}{1{,}000}$$

V [m³]	Minimum volume
P [kW]	Engine rating

Tank heating

The heating surfaces should be dimensioned that the HFO settling tank content can be evenly heated to 75°C within 6 to 8 hours. The heating should be automatically controlled, depending on the fuel oil temperature.

In order to avoid:

- Agitation of the sludge due to heating, the heating coils should be arranged at a sufficient distance from the tank bottom.
- The formation of asphaltene, the fuel oil temperature should not be permissible to exceed 75°C.
- The formation of carbon deposits on the heating surfaces, the heat transferred per unit surface must not exceed 1.1 W/cm².

Design

The HFO settling tank is to be fitted with baffle plates in longitudinal and transverse direction in order to reduce agitation of the fuel oil in the tank in rough seas as far as possible. The suction pipe of the HFO separator must not reach into the sludge space. One or more sludge drain valves, depending on the slant of the tank bottom (preferably 10°), are to be provided at the lowest point. The HFO settling tank is to be insulated against thermal losses.

Sludge must be removed from the HFO settling tank before the separators draw fuel oil from it.

T-021/Sludge tank

If disposal by an incinerator plant is not planned, the tank has to be dimensioned so that it is capable of absorbing all residues which accumulate during the operation in the course of a maximum duration of voyage. The content of this tank must not be added to the engine fuel oil. In order to enable the emptying of the tank, it must be heated.

The heating is to be dimensioned so that the content of the tank can be heated to approximately 60°C.

P-015/HFO separator feed pump

The HFO separator feed pump should preferably be of the free-standing type, that is, not mounted on the HFO separator, as the delivery volume can be matched better to the required throughput.

H-008/HFO preheater

To reach the separating temperature, a HFO preheater matched to the fuel oil viscosity has to be installed.

CF-002/Residual fuel (HFO) separator

As a rule, poor quality, high viscosity fuel oil is used. Two new generation separators must therefore be installed.

The separators shall be capable to separate water from HFO with a density of 1,010 kg/m³ at 15°C.

2025-06-16 - 1.0

HFO separators must always be provided in sets of 2 of the same type:

- 1 service separator
- 1 stand-by separator

Of self-cleaning type.

As a matter of principle, all separators are to be equipped with an automatic programme control for continuous desludging and monitoring.

Mode of operation

The stand-by separator is always to be put into service, to achieve the best possible fuel oil cleaning effect with the separator plant as installed.

The piping of both HFO separators is to be arranged in accordance with the manufacturer´s advice, preferably for both parallel and series operation.

The discharge flow of the free-standing dirty oil pump is to be split up equally between the two separators in parallel operation.

The freshwater supplied must be treated as specified by the separator supplier.

Size

The HFO separators are dimensioned in accordance with the separator manufacturers' guidelines. The required design flow rate (Q) can be roughly determined by the following equation:

$$Q = \frac{P \times b_e}{\rho}$$

Q [l/h]	Separator flow rate
P [kW]	Total engine output
b_e [g/kWh]	Fuel oil consumption
ρ [g/l]	Density at separating temp approximately 930 kg/m^3 = [g/l]

With the evaluated flow rate, the size of the separator has to be selected according to the evaluation table of the manufacturer. The separator rating stated by the manufacturer should be higher than the flow rate (Q) calculated according to the above formula.

For the first estimation of the maximum fuel oil consumption (b_e), increase the specific table value by 15%, see section Planning data, Page 107.

For project-specific values contact MAN Energy Solutions.

In the following, characteristics affecting the fuel oil consumption are listed exemplary:

- Tropical conditions
- The engine-mounted pumps
- Fluctuations of the calorific value (Especially when using biofuels and synthetic fuels)
- The consumption tolerance

Regarding required limits on water and particles in the fuel after separation refer to table Requirements for diesel fuel.

Note:
If a homogeniser is used, it must never be installed between the settling tank and separator as otherwise it will not be possible to ensure satisfactory separation of harmful contaminants, particularly seawater.

2025-06-16 - 1.0

Withdrawal points for samples

Fuel oil sampling points are to be provided upstream and downstream of each separator, to verify the effectiveness of these system components.

MOD-008/Fuel oil module

See description in figure(s) HFO supply system diagram(s), Page 391.

T-022/Residual fuel (HFO) service tank

See description in paragraph T-022/Residual fuel (HFO) service tank, Page 382.

T-071/Clean leakage fuel oil tank

See description in paragraph T-071/Clean leakage fuel oil tank, Page 389.

2025-06-16 - 1.0

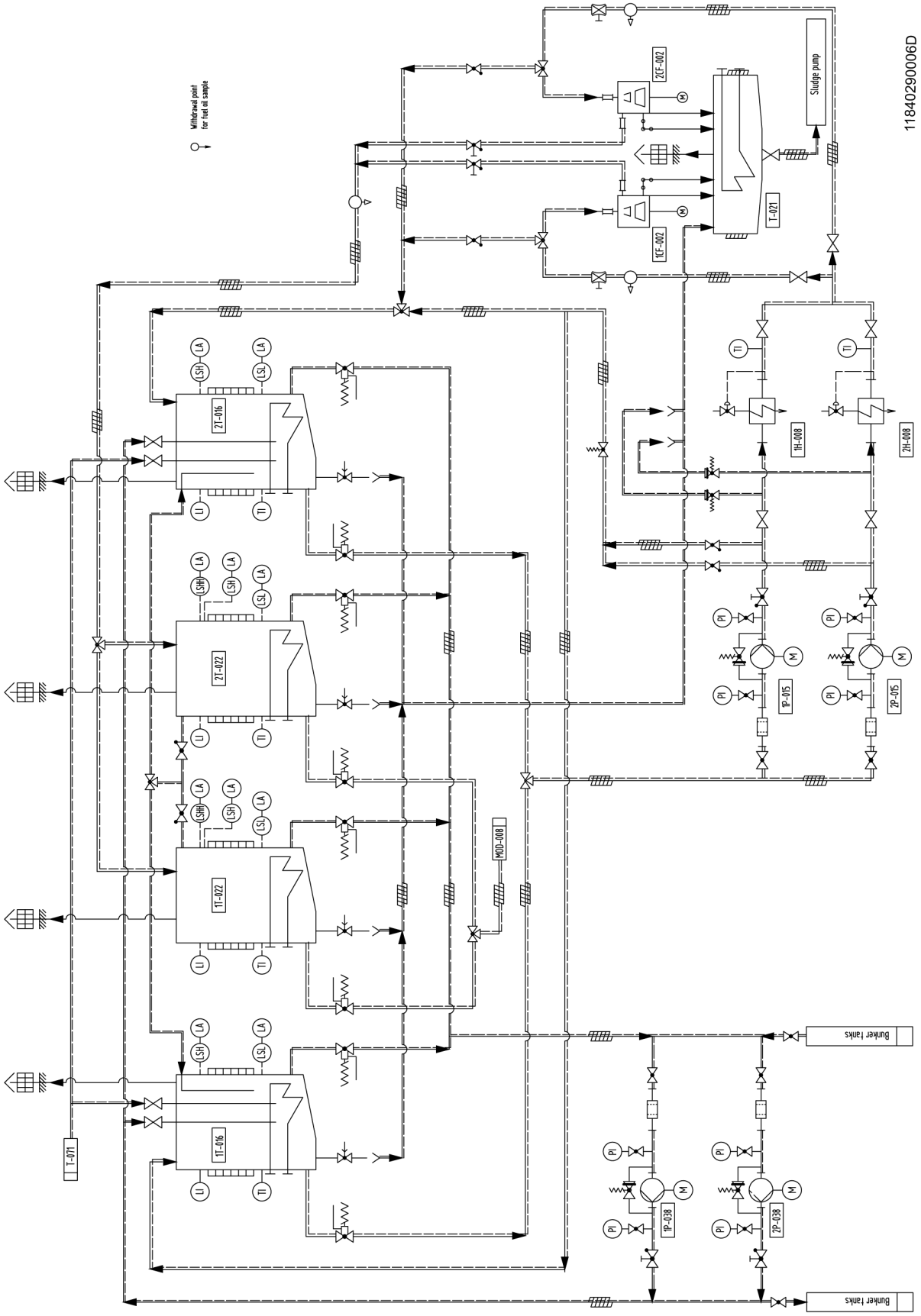
Withdrawal point for fuel oil sample
2CF-002
1CF-002
T-021
Sludge pump
11840290006D
2T-016
2T-022
1T-022
1T-016
T-011
LSH
LSL
LA
LI
TI
PI
M
1H-008
2H-008
1P-015
2P-015
MOD-008
1P-038
2P-038
Bunker Tanks
Bunker Tanks

2025-06-16 - 1.0

	Components		
1,2 CF-002	HFO separator	1,2 T-016	HFO settling tank
1,2 H-008	HFO preheater	T-021	Sludge tank
MOD-008	Fuel oil module	1,2 T-022	HFO service tank
1,2 P-015	HFO separator feed pump	T-071	Clean leakage fuel oil tank
1,2 P-038	HFO transfer pump		

Figure 148: Residual fuel (HFO) treatment system diagram

5.8.5 External fuel system – Heavy fuel oil (HFO) supply system

General

The HFO supply system is a pressurised closed loop system. Normally one or two main engines are connected to one fuel oil system. If required, auxiliary engines can be connected to the same fuel oil system as well (not indicated in the diagram).

To ensure that high-viscosity fuel oils achieve the specified injection viscosity, high operation temperature is necessary, which may cause degassing problems in conventional, pressureless systems.

A remedial measure is adopting a pressurised system in which the required system pressure is 1 bar above the evaporation pressure of water.

Fuel	Injection viscosity[1)]	Temperature after final heater HFO	Evaporation pressure	Min. required system pressure
mm²/50°C	mm²/s	°C	bar	bar
180	12	126	1.4	2.4
320	12	138	2.4	3.4
380	12	142	2.7	3.7
420	12	144	2.9	3.9
500	14	141	2.7	3.7
700	14	147	3.2	4.2

[1)] For fuel oil viscosity depending on fuel temperature see section Viscosity-temperature diagram (VT diagram), Page 278.

Table 169: Injection viscosity and temperature after final heater residual fuel (HFO)

The indicated pressures are minimum requirements due to the fuel characteristic. Nevertheless, to meet the required fuel pressure at the engine inlet (see section Planning data, Page 107 and the following), the pressure in the fuel oil mixing tank and booster circuit becomes significant higher than indicated in this table.

T-022/HFO service tank

The HFO cleaned in the residual fuel separator is passed to the service tank, and as the separators are in continuous operation, the tank is always kept filled.

2025-06-16 - 1.0

To fulfil this requirement it is necessary to fit the HFO service tank T-022 with overflow pipes, which are connected with the HFO settling tanks T-016. The tank capacity is to be designed for at least eight-hours' fuel supply at full load so as to provide for a sufficient period of time for separator maintenance.

The tank should have a sludge space with a tank bottom inclination of preferably 10° with sludge drain valves at the lowest point and it is to be equipped with heating coils.

The sludge must be drained from the service tank at regular intervals.

The heating coils are to be designed for a tank temperature of 75°C.

The rules and regulations for tanks issued by the classification societies must be observed.

HFO with high and low sulphur content must be stored in separate service tanks.

T-003/Diesel fuel oil service tank

The classification societies specify that at least two service tanks are to be installed on board. The minimum volume of each tank should, in addition to the DMA/DMB consumption of the generating sets, enable an eight-hour full load operation of the main engine.

Cleaning of the DMA/DMB by an additional separator should, in the first place, be designed to meet the requirements of the diesel alternator sets on board. Just like the HFO service tank, the diesel fuel oil service tank is to be provided with a sludge space with sludge drain valve, and with an overflow pipe from the diesel fuel oil service tank T-003, to the diesel fuel oil storage tank T-015. For more detailed information see section External fuel system – Marine diesel oil (DMB) supply system, Page 368.

CK-002/Three-way valve for fuel oil changeover

This valve is used for changing over from DMA/DMB operation to HFO operation and vice versa. This valve could be operated manually or automatically. It is equipped with two limit switches for remote indication and suppression of alarms from the viscosity measuring and control system, during DMA/DMB operation.

STR-010/Suction strainer

To protect the fuel oil supply pumps, an approximately 0.5 mm gauge (sphere-passing mesh) strainer is to be installed at the suction side of each supply pump.

2025-06-16 - 1.0

P-018/Fuel oil supply pump

The capacity of the supply pump must be at least 160% of the maximum fuel oil consumption.

$Q_P = (P \times (br_{ISO} / 1{,}000) \times f \times S) / \rho$		
Required supply pump delivery capacity	Q_P	m^3/h
Engine output at 100% MCR	P_1	kW
Specific engine fuel oil consumption (ISO) at 100% MCR	br_{ISO}	g/kWh
Factor for pump dimensioning	f = 1.6	-
Safety factor for consideration of attached pumps and tropical conditions	S = 1.1	-
Min. fuel density at 15°C	ρ	kg/m^3
Note: The fuel density shall be chosen according the fuel with the lowest density, for which the system is designed for (in general DMA, min. density 820 kg/m^3 at 15°C). In case more than one engine is connected to the same fuel oil system, the pump capacity has to be increased accordingly.		

Table 170: Simplified fuel oil supply pump dimensioning

The delivery height of the fuel oil supply pump shall be selected according to the required system pressure (see table Injection viscosity and temperature after final heater heavy fuel oil, Page 382), the required pressure in the mixing tank and the resistance of the automatic filter, flowmeter and piping system.

		Injection system
		bar
Positive pressure at the fuel module inlet due to tank level above fuel module level	–	0.10
Pressure loss of the pipes between fuel module inlet and mixing tank inlet	+	0.20
Pressure loss of the automatic filter	+	0.80
Pressure loss of the fuel flow measuring device	+	0.10
Pressure in the fuel oil mixing tank	+	5.70
Operating delivery height of the supply pump	=	6.70

Table 171: Example for the determination of the expected operating delivery height of the fuel oil supply pump

It is recommended to install fuel oil supply pumps designed for the following pressures:

Engines with conventional fuel oil injection system: Design delivery height 7.0 bar, design output pressure 7.0 bar.

Engines with common rail injection system: Design delivery height 8.0 bar, design output pressure 8.0 bar.

HE-025/Fuel oil cooler, supply circuit

If no fuel is consumed in the system while the pump is in operation, the finned-tube cooler prevents excessive heating of the fuel. Its cooling surface must be adequate to dissipate the heat that is produced by the pump to the ambient air.

2025-06-16 - 1.0

In case of continuos DMA/DMB operation, a water cooled fuel oil cooler is required to keep the fuel oil temperature below 45°C.

PCV-009/Pressure limiting valve

This valve is used for setting the required system pressure and keeping it constant. It returns in the case of

- engine shutdown 100%, and of
- engine full load 37.5% of the quantity delivered by the fuel oil supply pump back to the pump suction side.

FIL-003/Fuel oil automatic filter, supply circuit

The automatic filter should be a type that causes no significant pressure drop during flushing sequence. As a reference an acceptable value for a pressure decrease during back flushing is 0.3 – 0.5 bar.

The automatic filter must be equipped with differential pressure indication and switches.

Design criterion is the filter area load specified by the filter manufacturer. The fuel oil automatic filter (supply circuit) has to be installed in the plant. It is not attached to the engine.

	Conventional fuel injection system
Filter mesh width (mm)	0.034
Design pressure	PN10

Table 172: Required filter mesh width (sphere passing mesh)

FQ-003/Fuel oil flowmeter

For a fuel oil consumption measurement (not mentioned in the diagram), flowmeters have to be installed upstream and downstream of the engine. The measured difference of these flows equals the consumption.

The upstream flow rate of each engine should be displayed in the ship automation and SaCoS system. Each flowmeter requires a by-pass to ensure a continuous fuel oil flow in case of maintenance or malfunction. A coriolis type flowmeter is recommended for fuel oil flow measuring. The by-pass of the coriolis type flowmeter needs a shut-off valve. If a positive displacement type flowmeter is used the by-pass needs to be equipped with a spring loaded overflow valve which opens automatically in case of blocking. The pressure resistance of the fuel oil flowmeter should be as low as possible and considered during the system design stage.

T-011/Fuel oil mixing tank

The mixing tank compensates pressure surges which occur in the pressurised part of the fuel system.

For this purpose, there has to be an air cushion in the tank. As this air cushion is exhausted during operation, compressed air (max. 10 bar) has to be refilled via the control air connection from time to time.

Before prolonged shutdowns the system is changed over to DMA/DMB operation.

The tank volume shall be designed keep the engine running at 50% load for 5 minutes. At 50% load the fuel oil consumption is approx. 1/2 x fuel oil consumption at full load.

2025-06-16 - 1.0

The tank shall be designed for the maximum possible service pressure, usually approximately 10 bar and is to be accepted by the classification society in question.

The expected operating pressure in the fuel oil mixing tank depends on the required fuel oil pressure at the inlet (see section Planning data, Page 107) and the pressure losses of the installed components and pipes.

		Injection system
		bar
Required max. fuel oil pressure at engine inlet	+	8.00
Pressure difference between fuel oil inlet and outlet engine	–	2.00
Pressure loss of the fuel oil return pipe between engine outlet and mixing tank inlet, e.g.	–	0.30
Pressure loss of the flow balancing valve (to be installed in multi-engine plants, pressure loss approximately 0.5 bar)	–	0.00
Operating pressure in the fuel oil mixing tank	=	5.70

Table 173: Example for the determination of the expected operating pressure of the fuel oil mixing tank

This example demonstrates, that the calculated operating pressure in the fuel oil mixing tank is (for all HFO viscosities) higher than the min. required fuel oil pressure (see table Injection viscosity and temperature after final heater heavy fuel oil, Page 382).

P-003/Fuel oil booster pump

To cool the engine mounted injection pumps, the capacity of the booster pump must be at least 300% of the maximum fuel oil consumption.

$Q_P = (P \times (br_{ISO} / 1{,}000) \times f \times S) / \rho$		
Required booster pump delivery capacity	Q_P	m^3/h
Engine output at 100% MCR	P	kW
Specific engine fuel oil consumption (ISO) at 100% MCR	br_{ISO}	g/kWh
Factor for pump dimensioning	f = 3	-
Safety factor for consideration of attached pumps and tropical conditions	S = 1.1	-
Min. fuel density at 15°C	ρ	kg/m^3
Note: The fuel density shall be chosen according the fuel with the lowest density, for which the system is designed for (in general DMA, min. density 820 kg/m^3 at 15°C). In case more than one engine is connected to the same fuel oil system, the pump capacity has to be increased accordingly.		

Table 174: Simplified fuel oil booster pump dimensioning

The delivery height of the fuel oil booster pump is to be adjusted to the total resistance of the booster system.

		Injection system
		bar
Pressure difference between fuel inlet and outlet engine	+	2.00

2025-06-16 - 1.0

		Injection system
		bar
Pressure loss of the flow balancing valve (to be installed only in multi-engine plants, pressure loss approximately 0.5 bar)	+	0.00
Pressure loss of the pipes, mixing tank – Engine mixing tank, e.g.	+	0.50
Pressure loss of the final heater heavy fuel oil max.	+	0.80
Pressure loss of the indicator filter	+	0.80
Operating delivery height of the booster pump	=	4.10

Table 175: Example for the determination of the expected operating delivery height of the fuel oil booster pump

It is recommended to install booster pumps designed for the following pressures:

Engines with conventional fuel oil injection system: Design delivery height 7.0 bar, design output pressure 10.0 bar.

Engines common rail injection system: Design delivery height 10.0 bar, design output pressure 14.0 bar.

T-008/Fuel oil damper tank

The injection nozzles cause pressure peaks in the pressurised part of the fuel oil system. In order to protect the viscosity measuring and control unit, these pressure peaks have to be equalised by a compensation tank. The volume of the pressure peaks compensation tank is 20 l.

Alternatively a metal bellow damper can be used in combination with an air cushion in the fuel oil mixing tank.

VI-001/Viscosimeter

This device regulates automatically the heating of the final heater HFO depending on the viscosity of the circulating fuel oil, to reach the viscosity required for injection.

H-004/Final heater HFO

The capacity of the final heater shall be determined on the basis of the injection temperature at the nozzle, to which at least 4 K must be added to compensate for heat losses in the piping. The piping for both heaters shall be arranged for single and series operation.

Parallel operation with half the throughput must be avoided due to the risk of sludge deposits.

FIL-013/Fuel oil duplex filter

This filter is to be installed upstream of the engine and as close as possible to the engine.

The emptying port of each filter chamber should be fitted with a valve and a pipe to the sludge tank. If the filter elements are removed for cleaning, the filter chamber must be emptied. This prevents the dirt particles remaining in the filter casing from migrating to the clean oil side of the filter.

2025-06-16 - 1.0

After changing the filter cartridge, the reconditioned filter chamber must be vented manually.

Design criterion is the filter area load specified by the filter manufacturer.

	Injection system
Filter mesh width (mm)	0.034
Design pressure	PN16

Table 176: Required filter mesh width (sphere passing mesh) – Injection system

FBV-010/Flow balancing valve

Heavy fuel oil supply system for only one main engine, without auxiliary engines

The flow balancing valve FBV-010 is not required.

Heavy fuel oil supply system for more than one main engine or/and additional auxiliary engines:

The flow balancing valve (1,2 FBV-010) is required at the fuel outlet of each engine. It is used to adjust the individual fuel flow for each engine. It will compensate the influence (flow distribution due to pressure losses) of the piping system. Once these valves are adjusted, they have to be blocked and must not be manipulated later.

FSH-001/Leakage fuel oil monitoring tank

High pressure pump overflow and escaping fuel from burst control pipes is carried to the monitoring tanks from which it is drained into the leakage oil collecting tank. The float switch mounted in the tanks must be connected to the alarm system. All parts of the monitored leakage system (pipes and monitoring tank) have to be designed for a fuel rate of 6.7 l/cyl. x min). The classification societies require the installation of monitoring tanks for unmanned engine rooms. Lloyd's Register specify monitoring tanks for manned engine rooms as well.

The leakage fuel oil monitoring tanks have to be installed in the plant close to the engine.

T-006/Leakage oil collecting tank

Dirty leak fuel and leak oil are collected in the leakage oil collecting tank. It must be emptied into the sludge tank. The content of the leakage oil collecting tank T-006 must not be added to the engine fuel. It can be burned for instance in a waste oil boiler.

The leakage oil collecting tank T-006 is only necessary if the leakages can not flow directly into the sludge tank T-021 by gravity.

For data regarding the leak rate, see table(s) Leakage rate, Page 159.

A high flow of leakage fuel oil will occur in case of a pipe break, for short time only (< 1 min). Engine will give an alarm after a pipe break alarm.

Leakage fuel oil flows pressureless (by gravity only) from the engine into these tanks (to be installed below the engine connections). Pipe clogging must be avoided by trace heating and by a sufficient downward slope.

2025-06-16 - 1.0

MOV-017/Leakage fuel oil switch-over valve

Depending on the supplied fuel oil type, the operation leakage of the high-pressure injection system can be drained into the HFO or distillate clean leakage fuel oil tank by switching over this valve.

Note:
It must be ensured that no HFO contamination is led into the distillate clean leakage fuel oil tank.

T-071/Clean leakage fuel oil tank

Injection pump overflow and other clean fuel oil that escapes from the injection system is led to the clean leakage fuel oil tanks.

From there the content of the distillate clean leakage fuel oil tank (1 T-071) must be emptied into the diesel fuel oil storage tank (T-015). The content of the HFO clean leakage fuel oil tank (2 T-071) must be emptied into the residual fuel (HFO) settling tank (T-016). The installation of these two clean leakage fuel oil tanks enables an effective separation of different fuel oil types.

The amount of clean operation leakage differs in a broad range, depending on the wear of the injection pumps, the type of fuel oil and the operating temperatures.

For data regarding the leak rate, see table(s) Leakage rate, Page 159.

Clean leakage fuel oil from the clean leakage fuel oil tanks 1,2 T-071 can be used again after passing the fuel oil separator.

Leakage fuel oil flows pressureless (by gravity only) from the engine into these tanks (to be installed below the engine connections). Pipe clogging must be avoided by trace heating and by a sufficient downward slope.

It must be ensured that the leakage fuel oil is well diluted with fresh fuel before entering the engine again. Nevertheless, leakage oil collecting tank T-006 is still required to collect lube oil leakages from lube oil drains (and other).

In case the described clean leakage fuel oil tank T-071 is installed, leakages from the following engine connections are to be conducted into this tank:

Engine type	Connection
L engine	5693, 5694
V engine	5693, 5694, 5688, 5691

Table 177: Connections clean leakage fuel oil tank

Withdrawal points for samples

Fuel oil sampling points are to be provided upstream and downstream of each filter, to verify the effectiveness of these system components.

CV-003/Cooling water control valve for fuel oil cooler

The purpose of this valve is to allow a smooth temperature/viscosity adaption to avoid sludge formation due to a harsh temperature change during a fuel oil change over. This is achieved by controlling the cooling water flow through the fuel oil cooler.

2025-06-16 - 1.0

HE-007/Fuel oil cooler
CK-003/Three-way valve (fuel oil cooler/by-pass)

The propose of the fuel oil cooler is to ensure that the viscosity of DMA/DMB will not become too fluid in engine inlet.

With the three-way valve (fuel oil cooler/by-pass) CK-003, the fuel oil cooler HE-007 has to be opened when the engine is switched from HFO to DMA/DMB operation.

That way, the DMA/DMB, which was heated while circulating via the injection pumps, is re-cooled before it is returned to the fuel oil mixing tank T-011. Switching on the fuel oil cooler may be effected only after flushing the pipes with DMA/DMB.

The cooler is cooled by LT cooling water.

Depending on the fuel oil type a chiller unit might be required to decrease the fuel oil temperature to reach the required injection system operation viscosity, see section Viscosity-temperature diagram (VT diagram), Page 278.

The thermal design of the cooler is based on the following data:

$P_c = P_1 x\ br_{ISO} x\ f_1$		
$Q_c = P_1 x\ br_{ISO} x\ f_2$		
Cooler outlet temperature MDO/MGO[1] T_{out} = 45 °C	T_{out}	°C
Dissipated heat of the cooler	P_c	kW
MDO flow for thermal dimensioning of the cooler[2]	Q_c	l/h
Engine output power at 100 % MCR	P_1	kW
Specific engine fuel oil consumption (ISO) at 100 % MCR	br_{ISO}	g/kWh
Factor for heat dissipation: $f_1 = 2.68 \times 10^{-5}$	f_1	kWh/g
Factor for MDO/MGO flow: $f_2 = 2.80 \times 10^{-3}$	f_2	l/g
Note: In case more than one engine, or different engines are connected to the same fuel system, the cooler capacity has to be increased accordingly.		
[1] This temperature has to be normally maximum 45 °C. Only for very light MGO fuel types this temperature has to be even lower in order to preserve the minimum admissible fuel oil viscosity in engine inlet (see section Viscosity-temperature diagram (VT diagram), Page 278). [2] The maximum MDO/MGO throughput is identical to the delivery quantity of the installed fuel oil booster pump.		

Table 178: Simplified fuel oil cooler dimensioning for engines without common rail (MAN 32/40, MAN 51/60DF)

The recommended pressure class of the fuel oil cooler is PN16.

V-002/Shut-off cock

HFO supply system for only one main engine, without auxiliary engines

Shut-off cock V-002 is not required.

HFO supply system for more than one main engine or/and additional auxiliary engines

The stop cock is closed during normal operation (multi-engine operation). When one engine is separated from the fuel oil circuit for maintenance purposes, this cock has to be opened manually.

2025-06-16 - 1.0

PCV-011/Fuel oil spill valve

HFO supply system for only one main engine, without auxiliary engines

Fuel oil spill valve PCV-011 is not required.

HFO supply system for more than one main engine or/and additional auxiliary engines

In case two engines are operated with one fuel oil module, it has to be possible to separate one engine at a time from the fuel oil circuit for maintenance purposes. In order to avoid a pressure increase in the pressurised system, the fuel oil, which cannot circulate through the shut-off engine, has to be rerouted via this valve into the return pipe. This valve is to be adjusted so that rerouting is effected only when the pressure, in comparison to normal operation (multi-engine operation), is exceeded. This valve should be designed as a pressure relief valve, not as a safety valve.

CF-002/Residual fuel (HFO) separator

See description in paragraph CF-002/Residual fuel (HFO) separator, Page 378.

CF-003/Diesel fuel oil separator

See description in paragraph CF-003/Diesel fuel oil separator, Page 365.

T-015/Diesel fuel oil storage tank

See description in paragraph T-015/Diesel fuel oil storage tank, Page 364.

T-016/Residual fuel (HFO) settling tank

See description in paragraph T-016/Residual fuel (HFO) settling tank, Page 377.

T-021/Sludge tank

See description in paragraph T-021/Sludge tank, Page 378.

Piping

The fuel oil system design pressure is PN16 (see section External pipe dimensioning, Page 294). The system is to be protected from higher pressure levels by corresponding safety valves. Additional safety valves, not displayed in the P&ID, might become necessary depending on the actual fuel oil system design.

Material

The casing material of pumps and filters should be EN-GJS (nodular cast iron), in accordance to the requirements of the classification societies.

2025-06-16 - 1.0

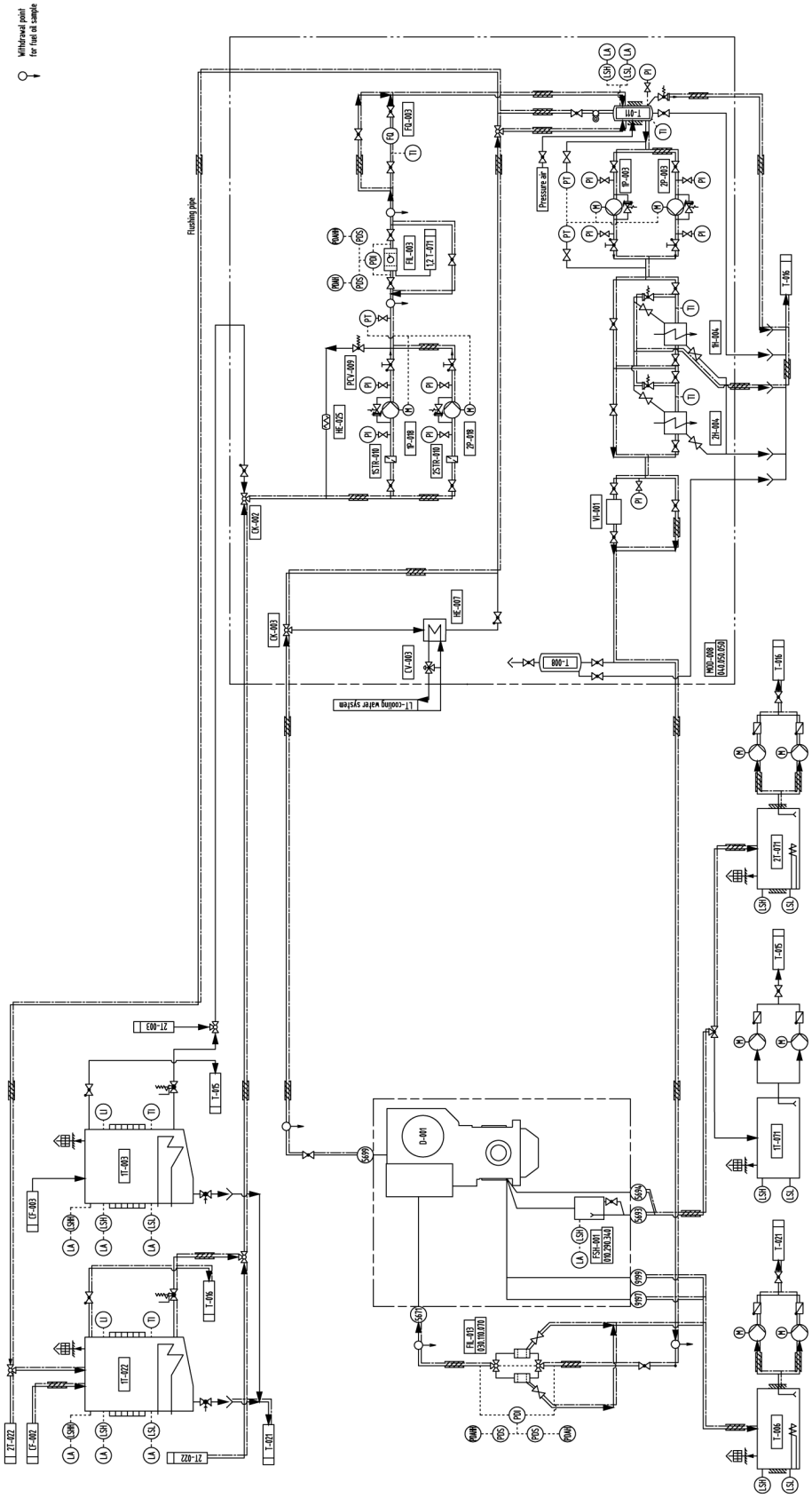
Withdrawal point for fuel oil sample
Flushing pipe
Pressure air
LT-cooling water system
D-001
11840280123

2025-06-16 - 1.0

	Components		
CF-002	Heavy fuel oil separator	1,2 P-003	Fuel oil booster pump
CF-003	Diesel fuel oil separator	1,2 P-018	Fuel oil supply pump
CK-002	Three-way valve for fuel oil changeover	PCV-009	Pressure limiting valve
CK-003	Three-way valve (fuel oil cooler/by-pass)	1,2 STR-010	Suction strainer
CV-003	Cooling water control valve for fuel oil cooler	1,2 T-003	Diesel fuel oil service tank
D-001	Diesel engine	T-006	Leakage oil collecting tank
FIL-003	Fuel oil automatic filter, supply circuit	T-008	Fuel oil damper tank
FIL-013	Fuel oil duplex filter	T-011	Fuel oil mixing tank
FQ-003	Fuel oil flowmeter	T-015	Diesel fuel oil storage tank
FSH-001	Leakage fuel oil monitoring tank	T-016	Heavy fuel oil settling tank
1,2 H-004	Final heater heavy fuel oil	T-021	Sludge tank
HE-007	Fuel oil cooler	1,2 T-022	Heavy fuel oil service tank
HE-025	Fuel oil cooler, supply circuit	1,2 T-071	Clean leakage fuel oil tank
MOD-008	Fuel oil module	VI-001	Viscosimeter
MOV-017	Leakage fuel oil switch-over valve		
	Major engine connections		
5671	Fuel oil inlet to engine	5699	Fuel oil outlet from engine
5693	Fuel oil break leakage drain 1	9197	Dirty oil drain from pump bank, counter coupling side 2
5694	Fuel oil leakage drain (reusable from pumps and injectors) 1	9199	Dirty oil drain from pump bank, counter coupling side 1

Figure 149: HFO supply system diagram – Single engine plant

2025-06-16 - 1.0

5.8 Fuel oil system

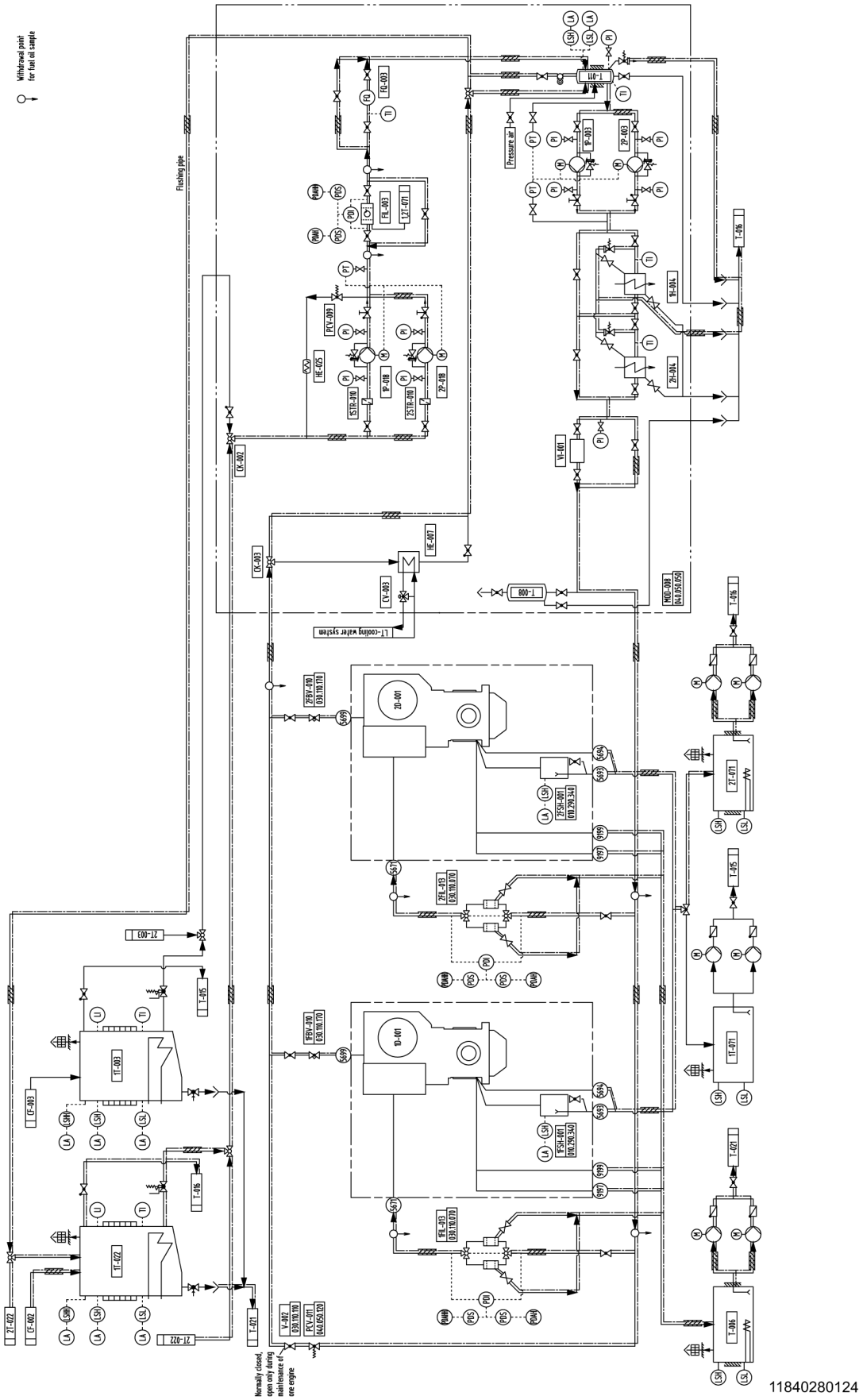

2025-06-16 - 1.0

	Components		
CF-002	Heavy fuel oil separator	1,2 P-003	Fuel oil booster pump
CF-003	Diesel fuel oil separator	1,2 P-018	Fuel oil supply pump
CK-002	Three-way valve for fuel oil changeover	PCV-009	Pressure limiting valve
CK-003	Three-way valve (fuel oil cooler/by-pass)	PCV-011	Fuel oil spill valve
CV-003	Cooling water control valve for fuel oil cooler	1,2 STR-010	Suction strainer
1,2 D-001	Diesel engine	1,2 T-003	Diesel fuel oil service tank
1,2 FBV-010	Flow balancing valve	T-006	Leakage oil collecting tank
FIL-003	Fuel oil automatic filter, supply circuit	T-008	Fuel oil damper tank
1,2 FIL-013	Fuel oil duplex filter	T-011	Fuel oil mixing tank
FQ-003	Fuel oil flowmeter	T-015	Diesel fuel oil storage tank
1,2 FSH-001	Leakage fuel oil monitoring tank	T-016	Heavy fuel oil settling tank
1,2 H-004	Final heater heavy fuel oil	T-021	Sludge tank
HE-007	Fuel oil cooler	1,2 T-022	Heavy fuel oil service tank
HE-025	Fuel oil cooler, supply circuit	1,2 T-071	Clean leakage fuel oil tank
MOD-008	Fuel oil module	V-002	Shut-off cock
MOV-017	Leakage fuel oil switch-over valve	VI-001	Viscosimeter
	Major engine connections		
5671	Fuel oil inlet to engine	5699	Fuel oil outlet from engine
5693	Fuel oil break leakage drain 1	9197	Dirty oil drain from pump bank, counter coupling side 2
5694	Fuel oil leakage drain (reusable from pumps and injectors) 1	9199	Dirty oil drain from pump bank, counter coupling side 1

Figure 150: HFO supply system diagram – Twin engine plant

5.8.6 External fuel system – Fuel oil supply at blackout conditions

As the main electrical grid is not available during a blackout, an alternative energy source has to guarantee fuel oil supply. If a sufficient uninterruptible power supply (UPS) system is available, it can be connected to the regular fuel oil supply pumps and run them in spite of blackout.

Alternatively an additional pneumatic pump can be installed. If this pump is connected to a working air system, it must be ensured that this system can always deliver sufficient compressed air required to outlast the blackout operation.

Also the starting air system can be used, if the additional air is considered for design of starting air receivers and the adequate control of the blackout pump is implemented in the ship automation system. Background is that the amount of compressed air required by class societies for engine starts must not be affected. MAN Energy Solutions can design a suitable pneumatic pump and calculate its compressed air consumption.

For a short time the engines can also run by use of a gravity fuel oil tank (MDO/MGO) or in a HFO system by the air pressure cushion in the fuel oil mixing tank (see required pressure in section Operating/service temperatures and pressures, Page 152.

Duration of blackout operation

Duration of the blackout pump operation should last till the regular fuel supply is recovered:

- Duration of the emergency GenSet for connecting to the main electrical grid
- Start-up time of the fuel oil module after main grid is restored

2025-06-16 - 1.0

- Buffer time

On the other hand, the duration of the blackout pump operation should be limited by the ship automation system due to:

- Reduction of UPS or compressed air consumption
- Consideration of engine related systems without power supply (e.g. cooling water system might overheat)

Depending on engine load it can be advisable to schedule blackout operation to maximum 90 seconds.

Integration in fuel oil system

In a diesel fuel oil supply system it is recommended to integrate the blackout pump parallel to the regular fuel oil supply pumps. In order to reduce compressed air consumption, it is possible to choose a downsized pump and operate the engine in part load.

For a heavy fuel oil supply system a pneumatic pump delivers fuel oil from MDO service tank into the mixing tank to guarantee low load operation. For high-load operation contact MAN Energy Solutions.

Note:
A fuel oil supply with cold DMA/DMB shortly after HFO operation will lead to temperature shocks in the injection system and has to be avoided under any circumstances.

5.9 Compressed air system

General

The engine requires compressed air for starting, for activation of control devices and for activation of the optional jet assist.

Compressed air quality

The compressed air, supplied to the engine, must meet the requirements given in section Specification of compressed air, Page 289.

5.9.1 Internal compressed air system

See overleaf

2025-06-16 - 1.0

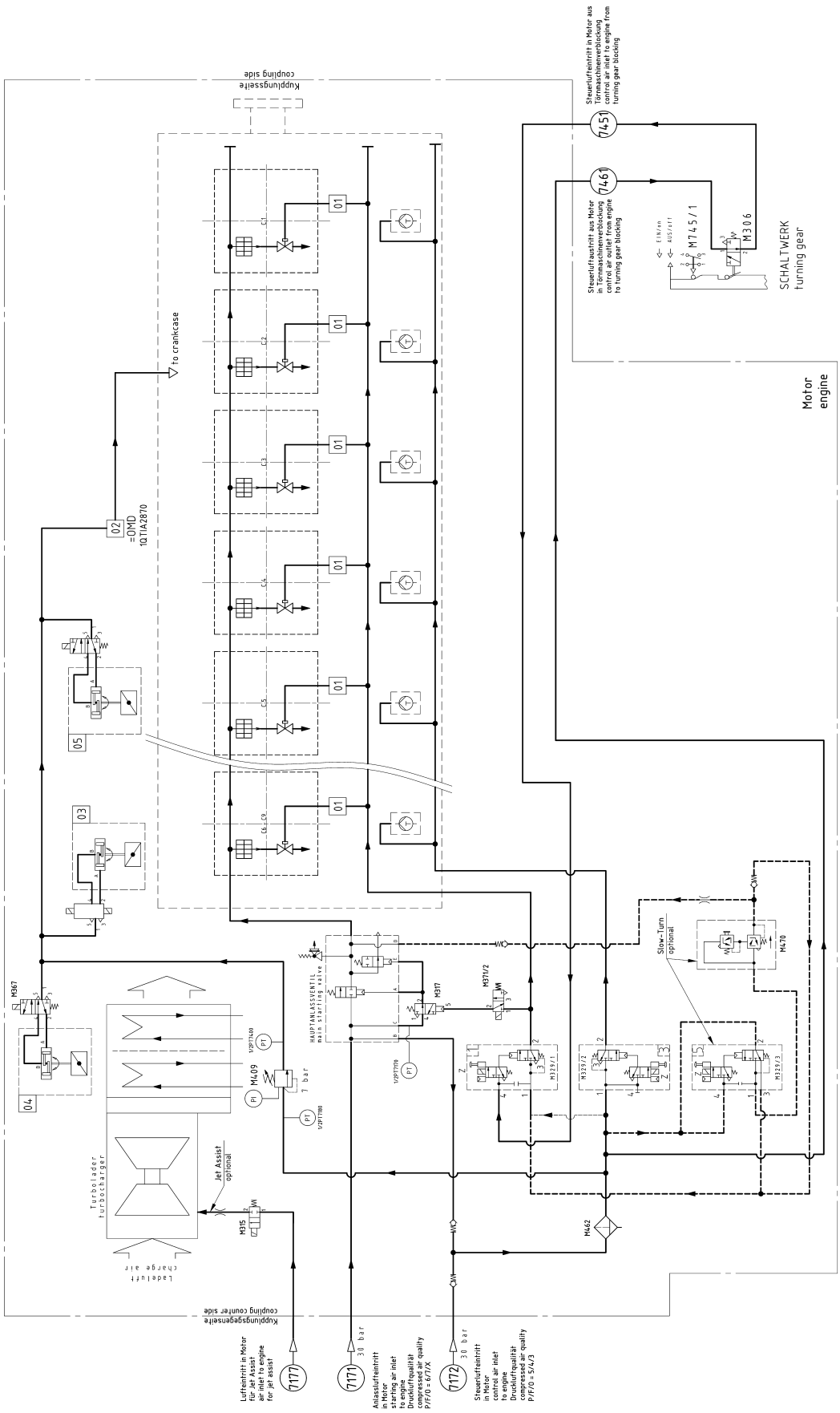
Kupplungsseite
coupling side
Steuerluftentritt in Motor aus Törmaschinenverblockung
control air inlet to engine from turning gear blocking
Steuerluftaustritt aus Motor in Törmaschinenverblockung
control air outlet from engine to turning gear blocking
SCHALTWERK
turning gear
Motor
engine
to crankcase
=OMD
1Q11A2870
Slow-Turn
optional
Jet Assist
optional
Turbolader
turbocharger
Ladeluft
charge air
Kupplungsgegenseite
coupling counter side
Luftentritt in Motor für Jet Assist
air inlet to engine for jet assist
Anlassluftentritt in Motor
starting air inlet to engine
Druckluftqualität
compressed air quality
P/F/O = 6/7/X
Steuerluftentritt in Motor
control air inlet to engine
Druckluftqualität
compressed air quality
P/F/O = 5/4/3
7177
7171
7172
30 bar
7 bar
M367
M409
M315
M462
M470
M317
M371/2
M339/1
M339/2
M339/3
M745/1
M306
HAUPTANLASSVENTIL
MAIN STARTING VALVE
01
02
03
04
05

7171 Starting air inlet to engine

7172 Control air inlet to engine

7177 Air inlet to engine for jet assist

7451 Control air inlet to engine from turning gear blocking

7461 Control air outlet from engine to turning gear blocking

Figure 151: Internal starting air system – Exemplary

Note:
The drawing shows the basic internal media flow of the engine in general.
Project-specific drawings thereof don´t exist.

5.9.2 External compressed air system – Description

The compressed air supply to the engine plant requires starting air receivers and starting air compressors of a capacity and air delivery rating which will meet the requirements of the relevant classification society.

Piping

The main starting pipe (engine connection 7171), connected to both air receivers, leads to the main starting valve (MSV-001) of the engine.

A second 30 bar pressure line (engine connection 7172) with separate connections to both air receivers supplies the engine with control air. This does not require larger air receivers.

A line branches from the aforementioned control air pipe to supply other air-consuming engine accessories (e.g. fuel oil automatic filter) with compressed air.

A third 30 bar pipe is required for engines with jet assist (engine connection 7177). Depending on the air receiver arrangement, this pipe can be branched off from the starting air pipe near engine or must be connected separately to the air receiver for jet assist.

The pipes to be connected by the shipyard have to be supported immediately behind their connection to the engine. Further supports are required at sufficiently short distance.

Flexible connections for starting air (steel tube type) have to be installed with elastic fixation. The elastic mounting is intended to prevent the hose from oscillating. For detail information refer to planning and final documentation and manufacturer manual.

Galvanised steel pipes must not be used for the piping of the system.

1 T-007, 2 T-007/Starting air receivers

The installation situation of the air receivers must ensure a good drainage of condensed water. Air receiver must be installed with a downward slope sufficiently to ensure a good drainage of accumulated condensate water.

The installation also has to ensure that during emergency discharging of the safety valve no persons can be compromised.

It is not permissible to weld supports (or other) on the air receivers. The original design must not be altered. Air receivers are to be bedded and fixed by use of external supporting structures.

A max. service pressure of 30 bar is required. The standard design pressure of the starting air receivers is 30 bar and the design temperature is 50 °C.

2025-06-16 - 1.0

1 C-001, 2 C-001/Air compressor

These are multi-stage compressor sets with safety valves, cooler for compressed air and condensate traps.

The operational compressor is switched on by the pressure control at low pressure then switched off when maximum service pressure is attained.

2025-06-16 - 1.0

5.9 Compressed air system

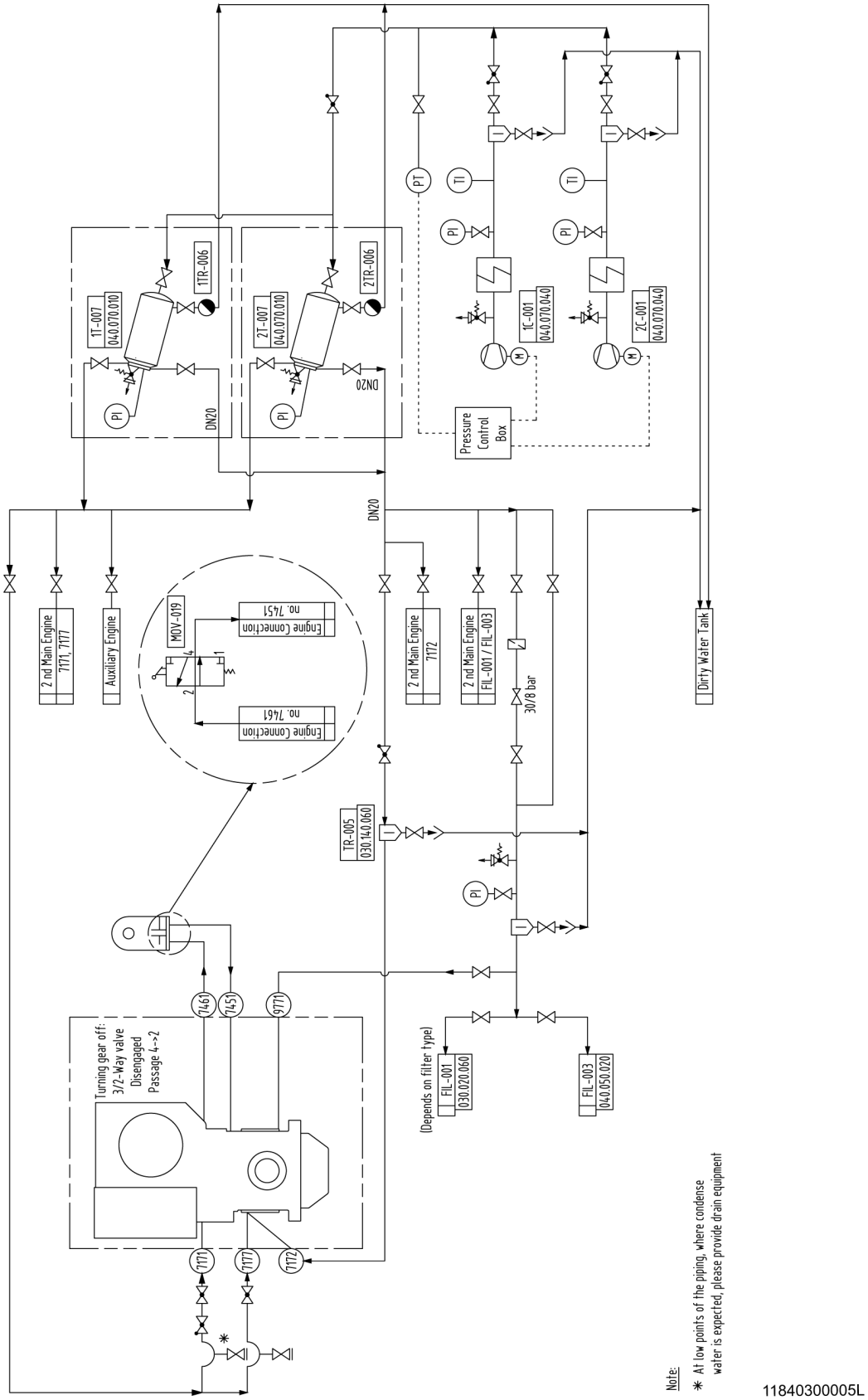

2025-06-16 - 1.0

	Components		
1,2 C-001	Air compressor	1,2 T-007	Starting air receiver
FIL-001	Lube oil automatic filter	TR-005	Water trap, compressed air system
FIL-003	Fuel oil automatic filter, supply circuit	1,2 TR-006	Automatic condensate trap
M-019	Valve for engine interlocking device		
	Connection numbers		
7171	Air inlet on main starting valve	7451	Control air inlet from turning gear
7172	Control air inlet	7461	Control air outlet to turning gear
7177	Air inlet for jet assist	9771	Air pressure connection for turbocharger dry cleaning

Figure 152: Starting air system diagram

5.9.3 External compressed air system – Dimensioning starting air receivers, compressors

Starting air receivers

The starting air supply is to be split up into not less than two starting air receivers of nominally the same size, which can be used independently of each another.

The engine requires compressed air for starting, start-turning, for the jet assist function as well as several pneumatic controls. The design of the pressure air receiver directly depends on the air consumption and the requirements of the classification societies.

In case of mechanical-propulsion drive without shifting clutch but with shaft driven alternator, consult MAN Energy Solutions.

For more information concerning jet assist see section External compressed air system – Jet assist, Page 403.

For air consumption see section Starting air and control air consumption, Page 103.

The air consumption per starting manoeuver and per Slow Turn activation depends on the inertia moment of the unit.

Within the table Starting air and control air consumption, Page 103 two different values for starting air and slow turn air consumption are stated, one at minimum and one at high moment of inertia. Accordingly the valid starting air consumption V_{Start} and $V_{Slow\ Turn}$ for the unit need to be interpolated between the two figures stated in the table based on the relevant total moment of inertia J_{Total} for the unit.

Hereby relevant is the moment of inertia, that needs to be accelerated by the engine's starting air system and can not be separated from the engine by a clutch during starting-up.

First the moment of inertia of the plant J_{Total} needs to be calculated:

$$J_{Total} = J_1 + J_2 + J_{Plant\ attached\ to\ flywheel}$$

For moment of inertia Θ_1 and Θ_2 of the engine see section Moments of inertia – Crankshaft, damper, flywheel, Page 181.

2025-06-16 - 1.0

Calculation for starting air receiver of engines without jet assist and Slow Turn:

$$V = \frac{\left(V_{Start} * (Z_{St} + Z_{Safe})\right) * p_{amb}}{(p_{max} - p_{min})}$$

Calculation for starting air receiver of engines with jet assist and Slow Turn:

$$V = \frac{\left(V_{Start} * (Z_{St} + Z_{Safe}) + \frac{V_{Jet}}{5\,sec} * Z_{Jet} * t_{Jet} + V_{Slowturn} * Z_{SL}\right) * p_{amb}}{(p_{max} - p_{min})}$$

V [litre]	Required receiver capacity
V_{Start}[litre]	Interpolated air consumption per start and valid for the unit, to be recalculated from Nm^3 to litre
J_1	Moment of inertia of crankshaft and damper of the engine[2)]
J_2	Moment of inertia of flywheel of the engine[2)]
$J_{Plant\ attached\ to\ the\ flywheel}$	Plant specific moment of inertia attached to the flywheel, that needs to be accelerated by the engine's starting air system and can not be separated from the engine by a clutch during starting-up
J_{Total}	Total moment of inertia of engine and plant, that needs to be accelerated by the engine's starting air system
z_{st}	Number of starts required by the classification society
z_{Safe}	Number of starts as safety margin
V_{Jet} [litre]	Assist air consumption per jet assist[1)], to be recalculated from Nm^3 to litre
z_{Jet}	Number of jet assist procedures[3)]
t_{Jet} [sec]	Duration of jet assist procedures
$V_{Slow\ Turn}$	Interpolated air consumption per slow turn and valid for the unit, to be recalculated from Nm^3 to litre
z_{sl}	Number of Slow Turn manoeuvres
p_{amb}	Ambient pressure
p_{max} [bar]	Maximum starting air pressure (normally 30 bar)
p_{min} [bar]	Minimum starting air pressure (15 bar)

[1)] Tabulated values see section Starting air and control air consumption, Page 103.

[2)] Tabulated values see section Moments of inertia – Crankshaft, damper, flywheel, Page 181.

[3)] The required number of jet manoeuvres has to be checked with yard or ship owner. To make a decision, consider the information in section External compressed air system – Jet assist, Page 403.

If other consumers (i.e. auxiliary engines, ship air etc.) which are not listed in the formula are connected to the starting air receiver, the capacity of starting air receiver must be increased accordingly, or an additional separate air receiver has to be installed.

2025-06-16 - 1.0

Compressors

According to most classification societies, two or more air compressors must be provided. At least one of the air compressors must be driven independently of the main engine and must supply at least 50% of the required total capacity.

The total capacity of the air compressors has to be capable to charge the receivers from the atmospheric pressure to full pressure of 30 bar within one hour.

The compressor capacities are calculated as follows:

$$P = \frac{V \times 30}{1000}$$

P [Nm^3/h]	Total volumetric delivery capacity of the compressors
V [litres]	Total volume of the starting air receivers at 30 bar service pressure

As a rule, compressors of identical ratings should be provided. An emergency compressor, if provided, is to be disregarded in this respect.

5.9.4 External compressed air system – Jet assist

General

Air consumption

The air consumption for jet assist is, to a great extent, dependent on the load profile of the ship. In case of frequently and quickly changing load steps, jet assist will be actuated more often than this will be the case during long routes at largely constant load.

Layout of starting air vessels and compressor – Guiding values for consideration of jet assist manoeuvres

For the layout of starting air vessels and compressor add to the air consumption of the considered starts and slow turns also the air consumption of these jet assist manoeuvres.

The data in following table is not binding. The required number of jet manoeuvres has to be checked with yard or ship owner. For decision see also section Start-up and load application, Page 59.

Application	Recommended no. of jet assist with average duration	
	Per hour	In rapid succession
General drive	None[1)]	None[1)]
Diesel-mechanical drive without shifting clutch	None[1)]	None[1)]
Diesel-mechanical drive with shifting clutch	3 x 5 sec	2 x 5 sec
Diesel-mechanical drive with shaft-driven alternator (> 50 % MCR)	5 x 5 sec	3 x 5 sec
Electric propulsion	10 x 5 sec	5 x 5 sec
Electric propulsion offshore application – Semisub production/ drilling applications and drillships[2)]	(20 x 5 sec)	(10 x 5 sec)

2025-06-16 - 1.0

Application	Recommended no. of jet assist with average duration	
	Per hour	In rapid succession
Ships with frequent load changes (e.g. ferries)	10 x 5 sec	5 x 5 sec
Auxiliary engine	3 x 5 sec	3 x 5 sec
High-torque applications	4 x 10 sec	2 x 10 sec
[1] According the necessity of the application "jet assist" please check figures Load application dependent on base load (engine condition hot), Page 64. If the curve "without jet assist" is sufficient, jet assist can be omitted.		
[2] For these applications please contact MAN Energy Solutions for a project specific estimation.		

Table 179: Guiding values for the number of jet assist manoeuvres dependent on application

Dynamic positioning for drilling vessels, cable-laying vessels, off-shore applications

When applying dynamic positioning, pulsating load application of > 25 % may occur frequently, up to 30 times per hour. In these cases, the possibility of a specially adapted, separate compressed air system has always to be checked.

Air supply

Generally, larger air receivers are to be provided for the air supply of the jet assist.

For the design of the jet assist air supply the temporal distribution of events needs to be considered, if there might be an accumulation of events.

In each case the delivery capacity of the compressors is to be adapted to the expected jet assist requirement per unit of time.

5.10 Engine room ventilation and intake air

5.10.1 External general information

Engine room ventilation system

Its purpose is:

- Supplying the engines and auxiliary boilers with combustion air.
- Carrying off the radiant heat from all installed engines and auxiliaries.

Intake air engine

The intake air of the engine must be free from spray water, snow, dust and oil mist.

This is achieved by:

- Louvres, protected against the head wind, with baffles in the back and optimally dimensioned suction space so as to reduce the air flow velocity to 1–1.5 m/s.
- Self-cleaning air filter in the suction space (required for dust-laden air, e.g. cement, ore or grain carrier).
- Sufficient space between the intake point and the openings of exhaust air ducts from the engine and separator room as well as vent pipes from lube oil and fuel oil tanks and the air intake louvres (the influence of winds must be taken into consideration).

2025-06-16 - 1.0

- Positioning of engine room doors on the ship's deck so that no oil-laden air and warm engine room air will be drawn in when the doors are open.
- Arranging the separator station at a sufficiently large distance from the turbochargers.

As a standard, the engines are equipped with turbochargers with air intake silencers and the intake air is normally drawn in from the engine room.

In tropical service a sufficient volume of air must be supplied to the turbocharger(s) at outside air temperature. For this purpose there must be an air duct installed for each turbocharger, with the outlet of the duct facing the respective intake air silencer, separated from the latter by a space of approximately 1.5 m (see figure Example: Exhaust gas ducting arrangement, Page 444). No water of condensation from the air duct must be permissible to be drawn in by the turbocharger. The air stream must not be directed onto the exhaust manifold.

If the ship operates at arctic conditions, an air preheater must be applied to maintain the engine room temperature above 5°C. In order to reduce power for air preheating, the engines can be supplied by a separate system directly from outside, see section Intake air ducting in case of arctic conditions, Page 406.

Air fans are to be designed so as to maintain a positive air pressure of 50 Pa (5 mm WC) in the engine room.

Radiant heat

The heat radiated from the main and auxiliary engines, from the exhaust manifolds, waste heat boilers, silencers, alternators, compressors, electrical equipment, steam and condensate pipes, heated tanks and other auxiliaries is absorbed by the engine room air.

The amount of air V required to carry off this radiant heat can be calculated as follows:

$$V = \frac{Q}{\Delta t \times cp \times \rho t}$$

V [m³/h]	Air required
Q [kJ/h]	Heat to be dissipated
Δt [°C]	Air temperature rise in engine room (10–12.5)
cp [kJ/kg*k]	Specific heat capacity of air (1.01)
ρt [kg/m³]	Air density at 35°C (1.15)

Ventilator capacity

The capacity of the air ventilators (without separator room) must be large enough to cover at least the sum of the following tasks:

- The combustion air requirements of all consumers.
- The air required for carrying off the radiant heat.

A rule-of-thumb applicable to plants operating on heavy fuel oil is 20–24m³/kWh.

Moreover it is recommended to apply variable ventilator speed to regulate the air flow. This prevents excessive energy consumption and cooling down of engines in stand-by.

2025-06-16 - 1.0

Maximum engine room temperature

The engine room ventilation must ensure a maximum engine room temperature, with following boundary conditions:

- Maximum air temperature in the area of the engine and its components ≤ 45°C.
- Maximum air temperature at least 5 K below the flash point of any liquids, that is present within the engine room.

5.10.2 External air supply with or without arctic conditions

General recommendations for external intake air system of vessels

The design of the intake air system ducting is crucial for reliable operation of the engine. The following points need to be considered:

(1) Every single engine must be provided with a dedicated intake air system. It is not allowed to combine air intake systems of different engines.

(2) According to classification rules, it may be required for arctic operation to install two air inlets from the exterior, one at starboard and one at portside.

(3) It must be prevented that exhaust gas and oil dust is sucked into the intake air duct as fast filter blocking might occur.

(4) In case of arctic operation, suitable corrosion and low temperature resistant materials should be applied. Stainless steel S316 L might be suitable. For non-arctic operation, a steel duct with C5-M-coating acc. DIN EN ISO 12944 might be sufficient.

(5) Inside the duct, there must not be any parts (e.g. bolts, nuts, stiffening, etc.) that could fall off and move towards the engine. Installations, that are absolutely necessary (e.g. light behind filter wall) must be specially secured (self-locking nuts, screwed covers instead of clamped covers etc.).

(6) Due to the air flow, load changes and other external forces, (especially during ice breaking, if applicable) the intake air pipe is subject to heavy vibrations. Additionally engine and propeller exciting frequencies have to be taken into account. This has to be considered within the overall layout and the intake air duct needs to be reinforced sufficiently.

(7) Thermal expansion has to be considered for the layout and foundation of the duct (e.g. flexible mounting, additional compensators).

(8) Suitable drainage arrangements to remove any water from the intake air ducting should be provided. Backflow of air through drains has to be avoided (e.g. by syphons) and regularly checked for proper functioning. Adequate heating is required to prevent icing of drains.

(9) The air duct and its components need to be insulated properly. Especially a vapor barrier has to be applied to prevent atmospheric moisture freezing in the insulation material.

(10) An (automatic) shut-off flap should be installed to prevent a chimney effect and cooling down of engine during stand-still (maintenance or stand-by of engine). This flap is to be monitored and engine start should only be allowed in fully-open position. As an alternative, the intake system can be closed by a roller shutter or tarpaulin in front of the filter.

(11) The overall pressure drop of the intake air system ducting and its components is to be limited to 20 mbar. Moreover the differential pressure of the intake air filter must be monitored to fulfill this requirement. For additional safety, other components as the droplet separator and the weather hood can be monitored by differential pressure devices.

2025-06-16 - 1.0

During commissioning and maintenance work, checking of the air intake system back pressure by means of a temporarily connected measuring device may become necessary. For this purpose, a measuring socket is to be provided approximately 1–2 metres before the turbocharger, in a straight length of pipe at an easily accessible position. Standard pressure measuring devices usually require a measuring socket size of 1/2".

(12) The turbocharger as a flow machine requires a uniform inflow. Therefore, the ducting must enable an air flow without disturbances or constrictions. To prevent non-uniform compressor inlet flow conditions, the duct design should consider the following:

- Avoid or minimise the number of elbows.
- Avoid multiple/repetitive deflections with a flow turn angle > 45°.
- Avoid combinations of flow turns in multiple planes.
- For engines with two turbochargers it must be ensured, that both turbochargers have identical conditions for the air supply, otherwise this would result in decreasing the surge stability.

(13) To prevent stalling, any intake air flow that exhibits a swirl counterrotating against the compressor wheel rotation must be avoided.

(14) It is recommended to verify the layout of the intake air piping by CFD calculations up to the entry of the compressor of the turbocharger.

(15) The maximum specified air flow speed of 20-25 m/s should not be exceeded at any location of the pipe.

(16) A silencer is recommended to reduce the noise emissions from engine inlet and charge air blow-off. Sound power levels can be found in the relevant section of the Project Guide. Care must be taken, that no insulation material can escape from the silencer, which can fuse into glass spheres in the combustion chamber.

Components of intake air ducting

The whole system and its components must be designed suitably robust to withstand pressure peaks occurring from turbocharger surge. This will not happen during normal operation, but it could occur at fast load changes of the engine. This can happen 2–3 times consecutively, until the turbocharger comes back to its normal working range.

The table below shows values at engine inlet connection with a suitable intake air ducting. An unfavorable intake air duct design can also lead to higher values.

Type	Variation	Frequency	Comment
Pressure oscillation	± 40 mbar, 5–10 Hz	Permanent	Normal operation/constant load
Peak pressure (shock wave)	± 300 mbar	Sporadically	Engine emergency stop/turbocharger surge

The ambient air, which is led to engine by the intake air duct, needs to be conditioned by several components as shown in figure External intake air supply system, Page 410. It needs to be cleaned according to the requirements in section Specification of intake air (combustion air), Page 288. This could be done by the following components:

- Section for cleaning of intake air (1–4)

2025-06-16 - 1.0

A weather hood (1) in combination with a snow trap (2) removes coarse dirt, snow and rain. A heated droplet separator (3) subsequently separates remaining water droplets or snow from the air. An appropriate filter cleans the intake air from particles. (4). A metal grid (e.g. 10x10 mm) after filter wall at intake air room is necessary to avoid filter elements or lost parts getting into air intake system. As a minimum, inlet air must be cleaned by an ISO coarse 45% class filter as per DIN EN ISO 16890. If there is a risk of high inlet air contamination, filter efficiency should be at least ISO ePM10 50% according to DIN EN ISO 16890. See figure External intake air supply system, Page 410.

- Combustion air silencer (5)

  Noise emissions of engine inlet and charge air blow-off can be reduced by a silencer in the intake air duct. It is recommended to apply a mesh (5a) at the outlet of the silencer to protect the turbocharger against any loose parts (e.g. insulation material of silencer, rust etc.) from the intake air duct. This mesh is to be applied even if the silencer will not be supplied. A drain close to the turbocharger is required to separate condensate water. See section Noise, Page 167.

- Overpressure flap (6) (optional)

  Depending on the system volume and chosen components, it might be necessary to install an overpressure flap between silencer and engine. Peak pressure pulses (e.g. during emergency stop) are conducted into the engine room via this flap, preventing possible damage to the filter and silencer.

- Shut-off flap/blind plate (7)

  It is recommended to install a shut-off flap to prevent cooling down of the engine during longer standstills under arctic conditions. This flap should be monitored by the engine automation system to prevent engine starting with a closed flap.
  As an alternative, the intake system can be closed by a roller shutter or tarpaulin in front of the filter.

- Compensator (8) and transition piece (9)

  A steel compensator (rubber might also be considered) has to be installed directly vertically upstream of the 90° transition piece behind the turbocharger. A rigid support must be provided as close as possible upstream of the compensator. It has to be noted, that this compensator is solely foreseen to compensate engine-borne movements. Additional compensators might be necessary to cope for thermal expansion.

- Strainer for commissioning phase (9a)

  To prevent residues from installation phase entering the engine during commissioning, a strainer or protective mesh must be installed as close as possible to the turbocharger. After the running-in is finished, the strainer must be removed and exchanged by an intermediate pipe. Final performance measurement and engine setting shall be done without an intake air strainer.

- Charge air blow-off or recirculation

  For arctic conditions, an increased firing pressure, which is caused by higher density of cold air, is prevented by an additional valve, which blows off charge air (11). A compensator (10) connects the engine with the charge air blow-off piping. The blown-off air is taken after (cold blow-off) the charge air cooler or before the charge air cooler (hot blow-off) and is circulated (12) back in the intake air duct or blown out via an additional silencer. A homogenous temperature profile and a correct measurement of intake air temperature in front of compressor has to be achieved. For this a minimum distance of five times the diameter of the intake air duct between inlet of blown-off air and the measuring point must be kept.

2025-06-16 - 1.0

Within section Engine operation under arctic conditions, Page 73 additional information is given and boundary conditions for the layout of the piping are stated.

2025-06-16 - 1.0

5.10 Engine room ventilation and intake air

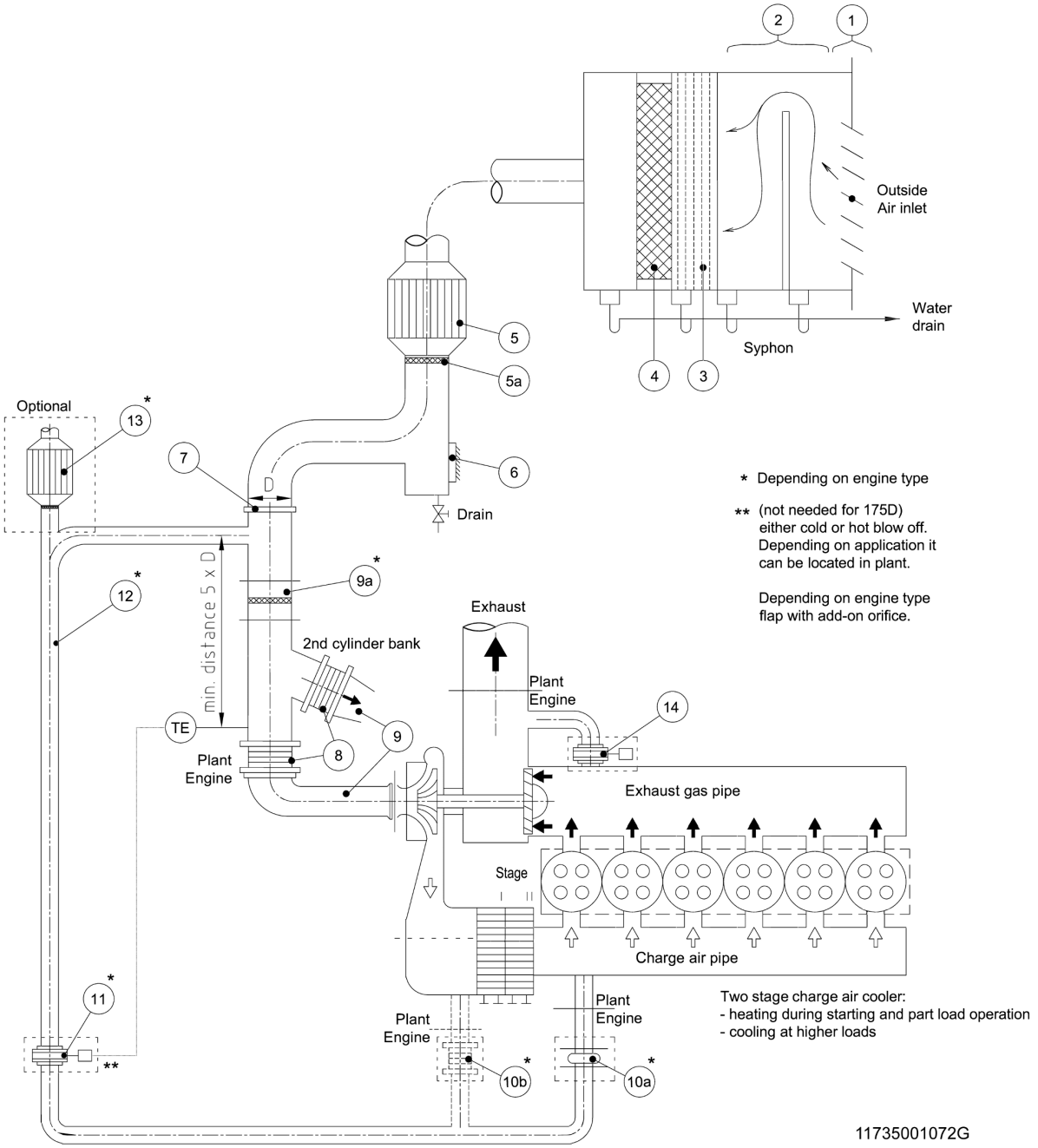

2025-06-16 - 1.0

1 Weather hood
2 Snow trap
3 Heated droplet separator
4 Air intake filter 030.120.010
5 Combustion air silencer 030.130.040
5a Protective mesh
6 Overpressure flap (optional)
7 Blind plate/shut-off flap (for maintenance case)
8 Metal bellow expansion joint combustion air (rubber might be considered)
9 Transition piece
9a Intermediate pipe with strainer for running-in phase (to be removed afterwards) 030.120.190
10a Rubber bellow expansion joint – Cold blow-off
10b Metal bellow expansion joint – Hot blow-off
11 Charge air blow-off valve
12 Charge air blow-off pipe
13 Charge air blow-off silencer
14 Waste gate (if required for relevant engine type)

Figure 153: External intake air supply system

5.11 Exhaust gas system

5.11.1 External exhaust gas system – General information

Layout

The flow resistance in the exhaust system has a very large influence on the fuel consumption and the thermal load of the engine. The values given in this document are based on an exhaust gas system which flow resistance does not exceed 50 mbar. If the flow resistance of the exhaust gas system is higher than 50 mbar, contact MAN Energy Solutions for project-specific engine data.

Note:
20 mbar resistance for the MAN SCR-LPC or 37 mbar for the MAN SCR-LPS as part of the total resistance have to be considered.

The pipe diameter selection depends on the engine output, the exhaust gas volume and the system back pressure, including silencer and SCR (if fitted). The back pressure also being dependent on the length and arrangement of the piping as well as the number of bends. Sharp bends result in very high flow resistance and should therefore be avoided. If necessary, pipe bends must be provided with guide vanes.

It is recommended not to exceed a maximum exhaust gas velocity of approximately 40 m/s, at stack outlet 35 m/s.

Installation

When installing the exhaust system, the following points must be observed:

- The exhaust pipes of two or more engines must not be joined.
- Because of the high temperatures involved, the exhaust pipes must be able to expand. The expansion joints to be provided for this purpose are to be mounted between fixed-point pipe supports installed in suitable positions. One compensator is required just after the outlet casing of the turbocharger (see section Position of the outlet casing of the turbocharger, Page 446) in order to prevent the transmission of forces to the turbocharger itself. These forces include those resulting from the weight, thermal expansion or lateral displacement of the exhaust piping. For this compensator/expansion joint one sturdy fixed-point support must be provided.
- The exhaust piping should be elastically hung or supported by means of dampers in order to prevent the transmission of sound to other parts of the vessel.

2025-06-16 - 1.0

- The exhaust piping is to be provided with water drains, which are to be regularly checked to drain any condensation water or possible leak water from exhaust gas boilers if fitted.
- During commissioning and maintenance work, checking of the exhaust gas system back pressure by means of a temporarily connected measuring device may become necessary. For this purpose, two measuring sockets need to be provided approximately 1 to 2 metres after the exhaust gas outlet of the turbocharger, in a straight length of pipe at an easily accessed position. Standard pressure measuring devices usually require a measuring socket size of 1/2". This measuring socket is to be provided to ensure back pressure can be measured without any damage to the exhaust gas pipe insulation.

5.11.2 External components and assemblies of the exhaust gas system

Exhaust gas silencer and exhaust gas boiler

Mode of operation

The silencer operates on the absorption and resonance principle so it is effective in a wide frequency band. The flow path, which runs through the silencer in a straight line, ensures optimum noise reduction with minimum flow resistance.

A spark arrestor should be provided in the exhaust gas system (e.g. integrated in the silencer).

Note:
Spark arrestors are mandatory for certain ship types.

Installation

If possible, the silencer should be installed towards the end of the exhaust line.

A vertical installation situation is to be preferred in order to avoid formations of gas fuel pockets in the silencer. The cleaning ports of the spark arrestor are to be easily accessible.

Note:
Water entry into the silencer and/or boiler must be avoided, as this can cause damages of the components (e.g. forming of deposits) in the duct.

Exhaust gas boiler

To utilise the thermal energy from the exhaust, an exhaust gas boiler producing steam or hot water may be installed.

Insulation

The exhaust gas system (from outlet of turbocharger, silencer, catalyst, boiler to the outlet stack) is to be insulated to reduce the external surface temperature and airborne noise to the required level.

The relevant provisions concerning accident prevention and those of the classification societies must be observed.

The insulation is also required to avoid temperatures below the dew point on the interior side. In case of insufficient insulation intensified corrosion and soot deposits on the interior surface are the consequence. During fast load changes, such deposits might flake off and be entrained by exhaust in the form of soot flakes.

Insulation and covering of the compensator must not restrict its free movement.

2025-06-16 - 1.0

5.12 SCR system

5.12.1 General

The SCR system uses aqueous urea solution and a catalyst material to transform the pollutant nitrogen oxides into harmless nitrogen and water vapor. The main components of the SCR system are described in the following section.

For further information read section SCR – Special notes, Page 27.

5.12.2 As-delivered conditions and packaging

All components will be delivered and packaged in a seaworthy way (with dry agent, wooden boxing, shrink wrapped). Black carbon steel components will be coated with an anti-corrosive painting. Stainless steel components will not be coated.

The original packaging should not be removed until the date of installation.

The physical integrity of the packaging must be checked at the date of delivery.

5.12.3 Transportation and handling

Compressed air reservoir module (MOD-085)

Transport of the compressed air reservoir module can be organised by crane, via installed metal eyelets on the top side or fork-lifter.

Urea pump module (MOD-084)

Transport of the urea pump module can be organised by crane, via installed metal eyelets on the top side.

Dosing unit (MOD-082)

Transport of the dosing unit can be organised by crane, via installed metal eyelets on the top side.

Urea injection lance and mixing unit (MOD-087)

Transport of the mixing unit can be organised by crane, via two installed metal eyelets. For horizontal lifting it is sufficient using one of the metal eyelets.

Using a vertical way, the two cables each fixed on one metal eyelet have to be stabilised by a transversal bar.

Note:
The metal eyelets are designed to carry only the segments of the mixing unit, further weights are not allowed (e.g. complete welded mixing pipe).

SCR reactor (R-001)

Transport of the reactor can be organised by crane, via installed metal eyelets on the top side.

2025-06-16 - 1.0

SCR cabinet

Transport of the SCR cabinet can be organised by crane, via installed metal eyelets on the top side.

5.12.4 Storage

Compressed air reservoir module (MOD-085), urea pump module (MOD-084), dosing unit (MOD-082), SCR cabinet and sensor elements have to be stored in dry and weather-resistant conditions.

Catalyst elements shall be handled free from shocks and vibrations. Furthermore, catalyst elements have to be stored in dry and weather-resistant conditions. Keep oils or chemicals away from catalyst elements. Seaworthy packaging is only a temporary protection.

5.12.5 Components and assemblies of the SCR system

Catalyst elements

The catalyst elements are placed in metallic frames, so called modules. Due to the honeycomb structure of the catalyst elements, the catalytic surface is increased. The active component vanadium pentoxide (V_2O_5) in the surface supports the reduction of NO_x to harmless nitrogen.

The effectivity of the catalytic material decreases over time because of poisoning via fuel oil components or thermal impact. The durability depends on the fuel type and conditions of operation.

The status of catalyst deactivation is monitored continuously and the amount of urea injected is adapted according to the current status of the catalyst.

Compressed air reservoir module (MOD-085) and soot blowing system (MOD-086)

The compressed air required for the operation of the SCR system is provided by the compressed air reservoir module. It receives its compressed air via the ship´s compressed air grid. For the quality requirements read section Specification of compressed air, Page 289. The main supply line feeds the compressed air reservoir module, where a compressed air tank is installed. This high-pressure tank is a reservoir with enough capacity to ensure the supply of the dosing unit and the air consumption for the periodically cleaning of the catalysts´ surface, by avoiding fluctuations in the soot blowing system. In case of black out the volume of the tank will be used for flushing the urea line and nozzle. The module has to be positioned close to the reactor and the dosing unit. The maximum length of the compressed air line to the soot blowing system is 10 m.

The soot blower valves are positioned upstream each catalyst layer in order to clean the complete surface of the catalyst elements by periodical air flushing. The soot blowing always has to be in operation while engine running.

Urea pump module (MOD-084)

The urea pump module boosts urea to the dosing unit and maintains an adequate pressure in the urea lines. Upstream of the supply pump, a filter is installed for protection of solid pollutants. Downstream, the module is equipped with a return line to the urea storage tank with a pressure relief valve to ensure the required urea flow.

2025-06-16 - 1.0

The urea pump module has to be positioned close to the urea storage tank. The pump accepts a suction height of 3.5 m and a maximum pressure loss of 2 bar. One urea pump module can supply up to four SCR systems.

For requirements regarding redundancy, contact MAN Energy Solutions.

Note:
Urea quality according section Specification of urea solution, Page 290 is required. For urea consumption calculation for Tier III read section Urea consumption for emission standard IMO Tier III, Page 101.

Dosing unit (MOD-082)

The dosing unit controls the flow of urea to the injection nozzle based on the operation of the engine. Furthermore it regulates the compressed air flow to the injector.

In order to avoid clogging due to the evaporation of urea in the urea pipe and in the nozzle, a line between compressed air line and urea line is installed. An installed solenoid valve will open to flush and cool the urea line and nozzle with compressed air before and after injecting urea into the exhaust gas.

The dosing unit has to be installed close to the urea injection lance and mixing unit (maximum pipe length 5 m).

Urea injection lance and mixing unit (MOD-087)

The urea solution will be injected into the exhaust gas using a two-phase nozzle. The urea will be atomised with compressed air. The evaporation of the urea occurs immediately when the urea solution gets in contact with the hot exhaust gas.

The urea injection and the mixing unit have to be positioned according to MAN Energy Solutions requirements. In general, the mixing section is between 3.0–4.5 m long and of DN 500 to DN 2,300. The mixing duct is a straight pipe upstream of the reactor.

SCR reactor (R-001)

Each engine is equipped with its own SCR reactor and it is fitted in the exhaust gas piping without a by-pass. The SCR reactor housing is a steel structure. The reactor configuration is vertical and consists of several layers of catalysts. For horizontal installation, contact MAN Energy Solutions. The reactor is equipped with differential pressure and temperature monitoring, a maintenance door for service and the soot blowing system for each layer.

The maximum temperature of the exhaust gas is 450°C and a minimum exhaust gas temperature is required to ensure a reliable operation. Therefore temperature indicators are installed in the inlet and outlet of the reactor in order to monitor and control the optimum operating range.

The SCR reactor is capable of attenuating the sound according to the following table.

F_m in Hz	31.5	63	125	250	500	1,000
D_{TL} in dB	4	4	4	6	8	12

Table 180: Sound attenuation capability of the SCR reactor

2025-06-16 - 1.0

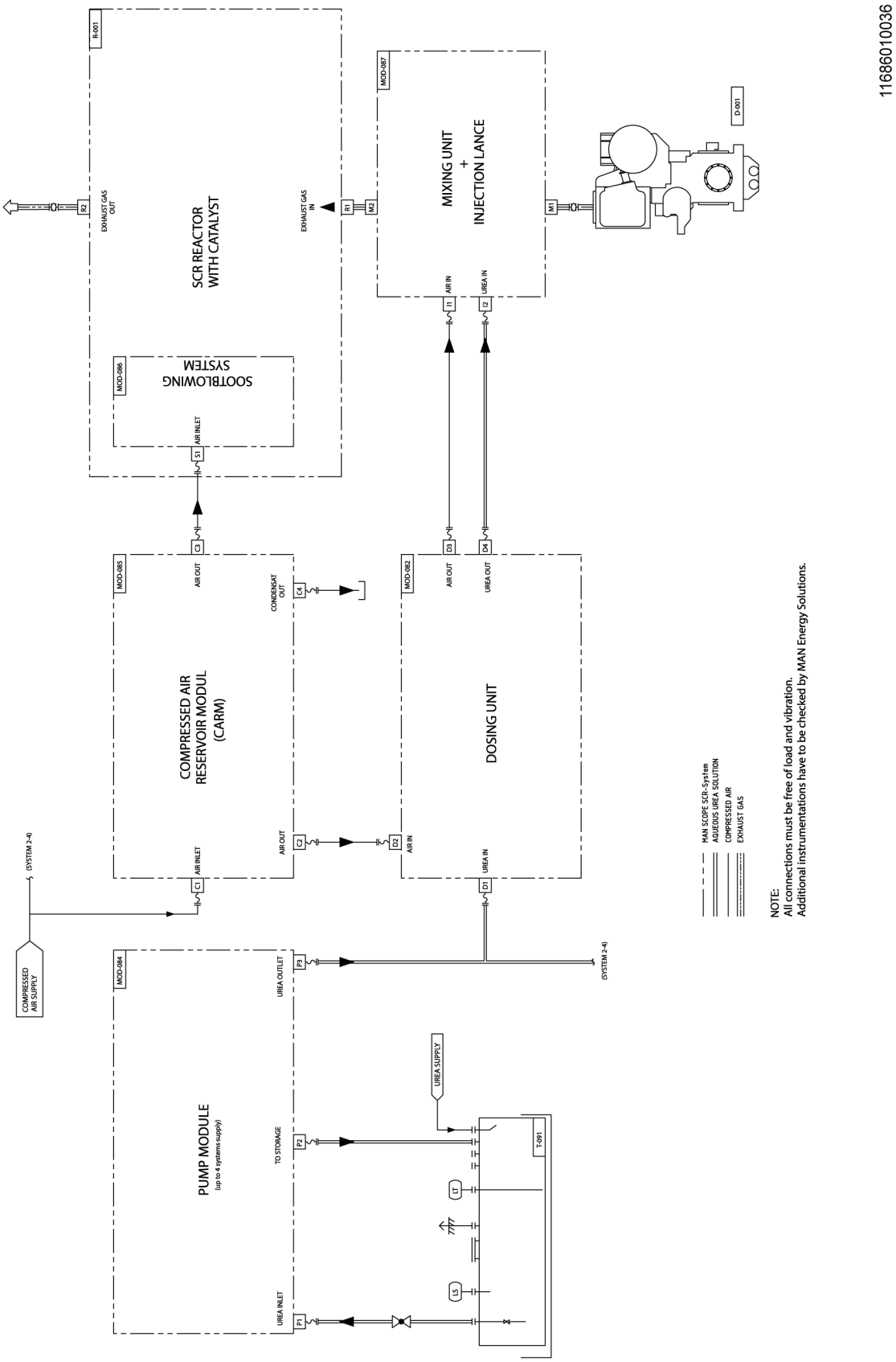

Figure 154: P&ID SCR system diagram

5.12.6 Installation of the SCR system

All modules are checked regarding pressure and tightness.

Catalyst elements

For handling the catalyst elements sufficient space and supply tracks have to be foreseen. Depending on the amount of catalyst elements transport devices like carriages, pulleys, fork lifter or elevators are required.

Reactor and soot blowing system

A service space of recommended 760 mm in front of the inspection doors of the reactor has to be foreseen for mounting and dismounting the catalyst elements, as well as for service and maintenance of the soot blower equipment and sensors.

Reactor and piping

In case of a bend before the reactor inlet, a bend radius of minimum one time of the exhaust gas pipe diameter has to be considered.

Mixing unit

The mixing unit is designed for vertical or horizontal installation. Bend on the downstream side has to be in accordance to above mentioned “Reactor and Piping”. Upstream of the mixing unit a bend can be installed according the MAN Energy Solutions requirements mentioned on the planning drawing.

5.12.7 Recommendations

All parts mentioned in this paragraph are not MAN Energy Solutions scope of supply.

Piping in general

All piping's have to be in accordance to section Specification of materials for piping, Page 295. Piping for fluids shall be mounted in an increasing/decreasing way. Siphons should be avoided, drainage system be foreseen.

Exhaust gas piping

The complete inside wall of the exhaust gas piping between engine outlet and SCR reactor inlet should not be coated by any protection material. Poisoning of the catalyst honeycombs could occur.

Intake air equipment, compressed air supply

Silicates in exhaust gas can cause capital damage of the catalyst elements of the exhaust gas after treatment system (SCR).

Therefore, it has to be ensured that no silicates can reach and poison the catalyst by related systems.

Possible sources for silicates could be e.g.:

- Intake air silencer of low quality (absorption material might get loose).
- Filters in compressed air system for SCR (adsorption filters containing silica gel).

Preferred materials

All materials used for the construction of tanks and containers including tubes, valves and fittings for storage, transportation and handling must be compatible with urea 40% solution to avoid any contamination of urea and corrosion of device used. In order to guarantee the urea quality the following materials for tank, pipes and fittings are compatible: Stainless steel (1.4301 or 1.4509) or urea-resistant plastics (e.g. PA12). For gaskets EPDM or FKM. Piping for compressed air see section Specification of materials for piping, Page 295.

Unsuitable materials

Unsuitable materials for tank, pipes and fittings are among others: Aluminum, unalloyed steel, galvanised steel, copper and brass.

In case incompatible material is used, clogging of urea filter inside the pump module may occur, or even worse, the catalyst elements may be damaged by catalyst poisons derived from this material. In this case, exchanging the catalyst modules may be necessary.

2025-06-16 - 1.0

Urea tank

Store this material in cool, dry, well-ventilated areas. Regarding the urea storage temperature, the requirements of the respective manufacturer information or applicable standards (e.g. ISO 18611-3) are to be observed. The storage capacity of the urea tank should be designed depending on ship load profile and bunker cycle.

The urea supply line should be provided with a strainer and a non-return valve in order to assure a correct performance for the suction of the urea pump, which is installed downstream the tank. A level switch with the possibility to read out the signal will protect the pump of a dry run. A return line from the urea pump module over a pressure relief valve is entering the tank.

Urea solution quality

Use of good quality urea is essential for the operation of an SCR catalyst. Using urea not complying with the specification below e.g. agricultural urea, can either cause direct operational problems or long term problems like deactivation of the catalyst. For quality requirements, see section Specification of urea solution, Page 290.

Insulation

The quality of the insulation has to be in accordance with the safety requirements. All insulations for service and maintenance spaces have to be dismountable. The delivered modules have no fixations, if fixations are necessary take care about the permissible material combination. Regarding max. permissible thermal loss see section Boundary conditions for SCR operation, Page 29.

Water trap

Water entry into the reactor housing must be avoided, as this can cause damage and clogging of the catalyst. Therefore a water trap has to be installed, if the exhaust pipe downstream of the SCR reactor is facing upwards.

2025-06-16 - 1.0

6 Engine room planning

6.1 Installation and arrangement

6.1.1 General details

Apart from a functional arrangement of the components, the shipyard is to provide for an engine room layout ensuring good accessibility of the components for servicing.

The cleaning of the cooler tube bundle, the emptying of filter chambers and subsequent cleaning of the strainer elements, and the emptying and cleaning of tanks must be possible without any problem whenever required.

All of the openings for cleaning on the entire unit, including those of the exhaust silencers, must be accessible.

There should be sufficient free space for temporary storage of pistons, camshafts, turbocharger etc. dismounted from the engine. Additional space is required for the maintenance personnel. The panels on the engine sides for inspection of the bearings and removal of components must be accessible without taking up floor plates or disconnecting supply lines and piping. Free space for installation of a torsional vibration meter should be provided at the crankshaft end.

A very important point is that there should be enough room for storing and handling vital spare parts so that replacements can be made without loss of time.

In planning marine installations with two or more engines driving one propeller shaft through a multi-engine transmission gear, provision must be made for a minimum clearance between the engines because the crankcase panels of each engine must be accessible. Moreover, there must be free space on both sides of each engine for removing pistons or cylinder liners.

Note:
MAN Energy Solutions delivered scope of supply is to be arranged and fixed by proven technical experiences as per state of the art. Therefore the technical requirements have to be taken in consideration as described in the following documents subsequential:

- Order related engineering documents.
- Installation documents of our sub-suppliers for vendor specified equipment.
- Operating manuals for diesel engines and auxiliaries.
- Project Guides of MAN Energy Solutions.

Any deviations from the principles specified in the aforementioned documents require a previous approval by MAN Energy Solutions.

Arrangements for fixation and/or supporting of plant related equipment deviating from the scope of supply delivered by MAN Energy Solutions, not described in the aforementioned documents and not agreed with us are not permissible.

For damages due to such arrangements we will not take over any responsibility nor give any warranty.

2025-06-16 - 1.0

6.1.2 Installation drawings

6L-9L engine

2025-06-16 - 1.0

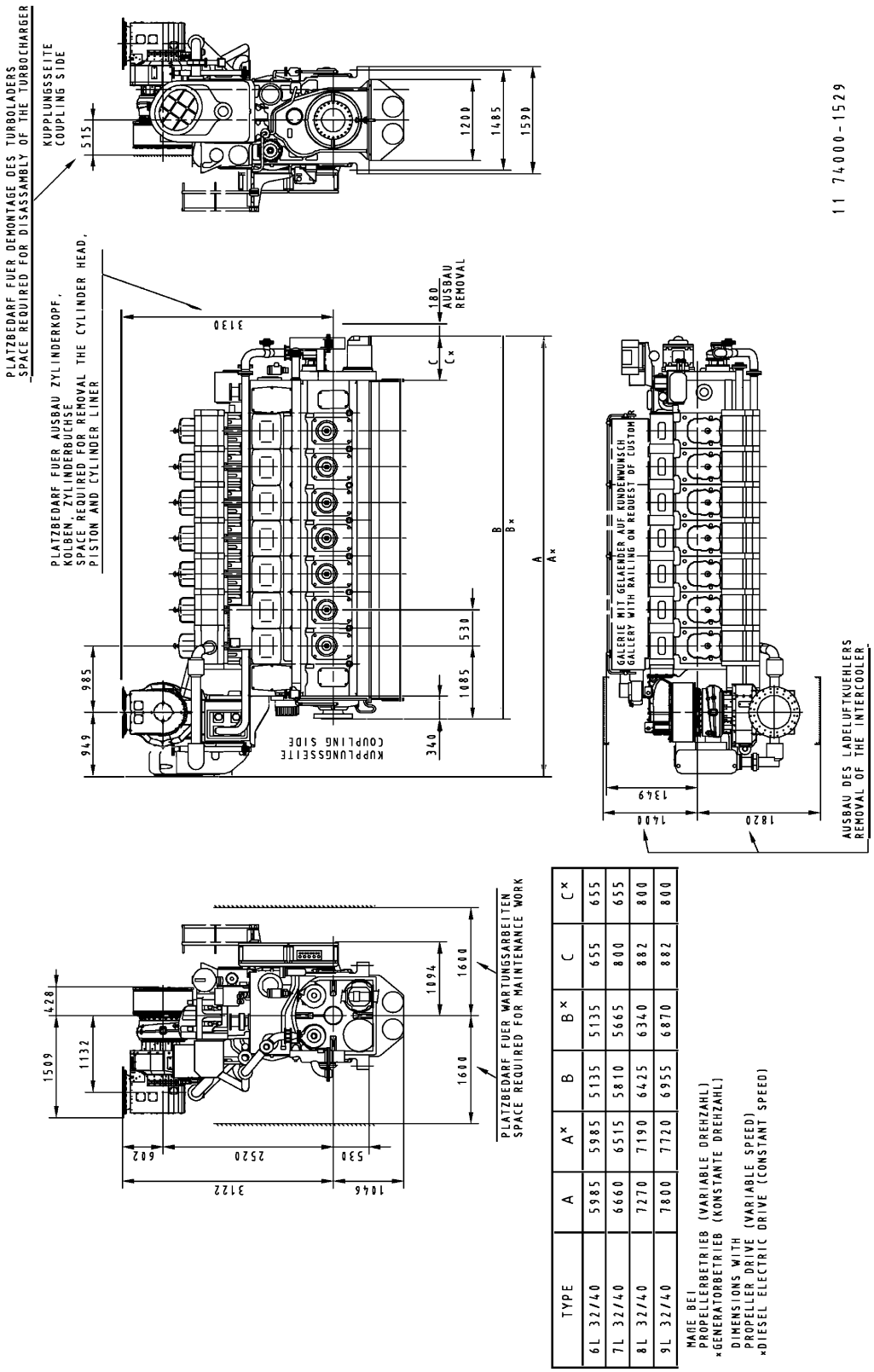

TYPE	A	A*	B	B*	C	C*
6L 32/40	5985	5985	5135	5135	655	655
7L 32/40	6660	6515	5810	5665	800	655
8L 32/40	7270	7190	6425	6340	882	800
9L 32/40	7800	7720	6955	6870	882	800

Figure 155: Installation drawing 6L-9L engine – Turbocharger on coupling side

2025-06-16 - 1.0

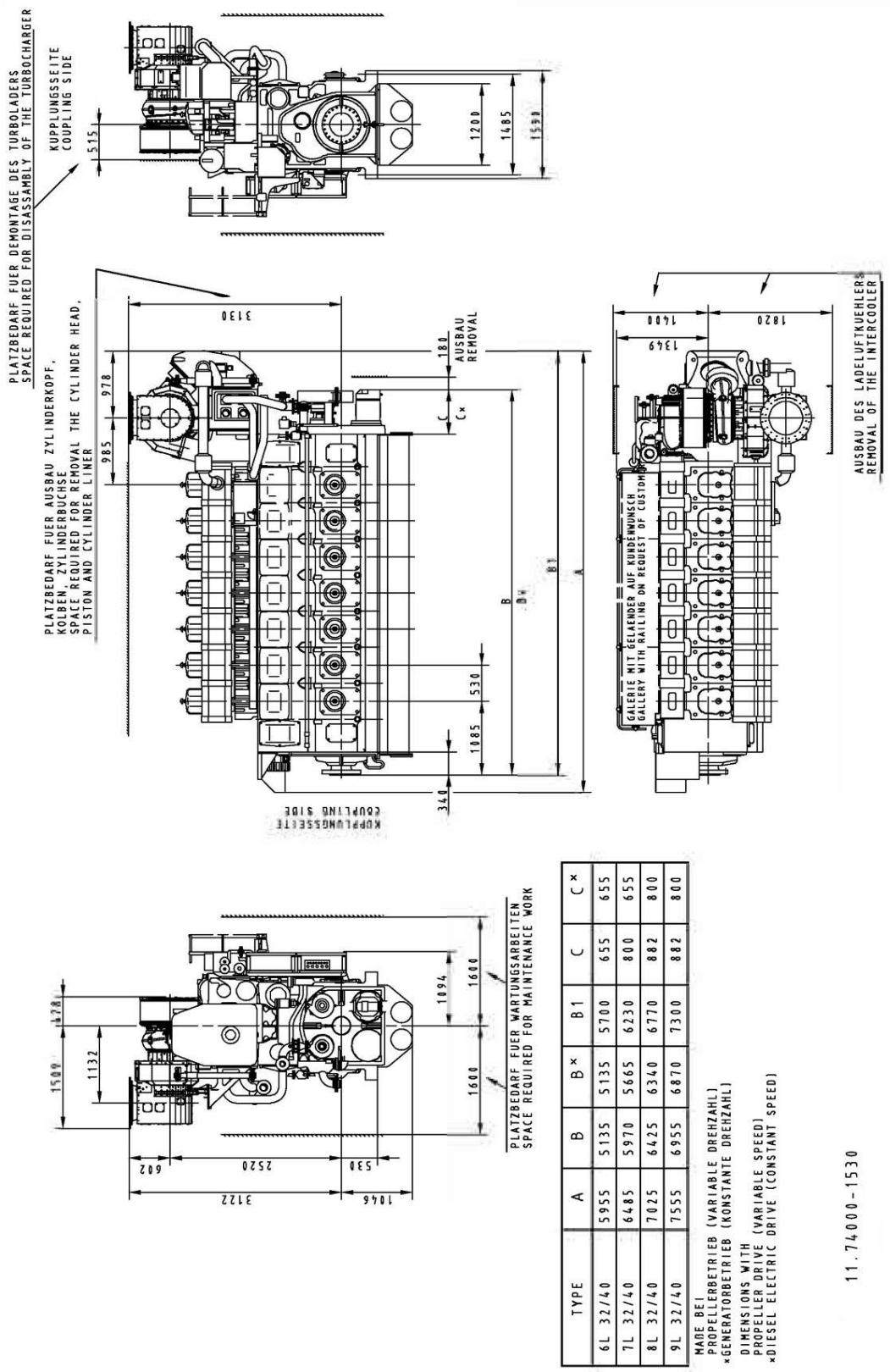

TYPE	A	B	B×	B1	C	C×
6L 32/40	5955	5135	5135	5700	655	655
7L 32/40	6485	5970	5665	6230	800	655
8L 32/40	7025	6425	6340	6770	882	800
9L 32/40	7555	6955	6870	7300	882	800

Figure 156: Installation drawing 6L-9L engine – Turbocharger on counter coupling side

12V-18V engine

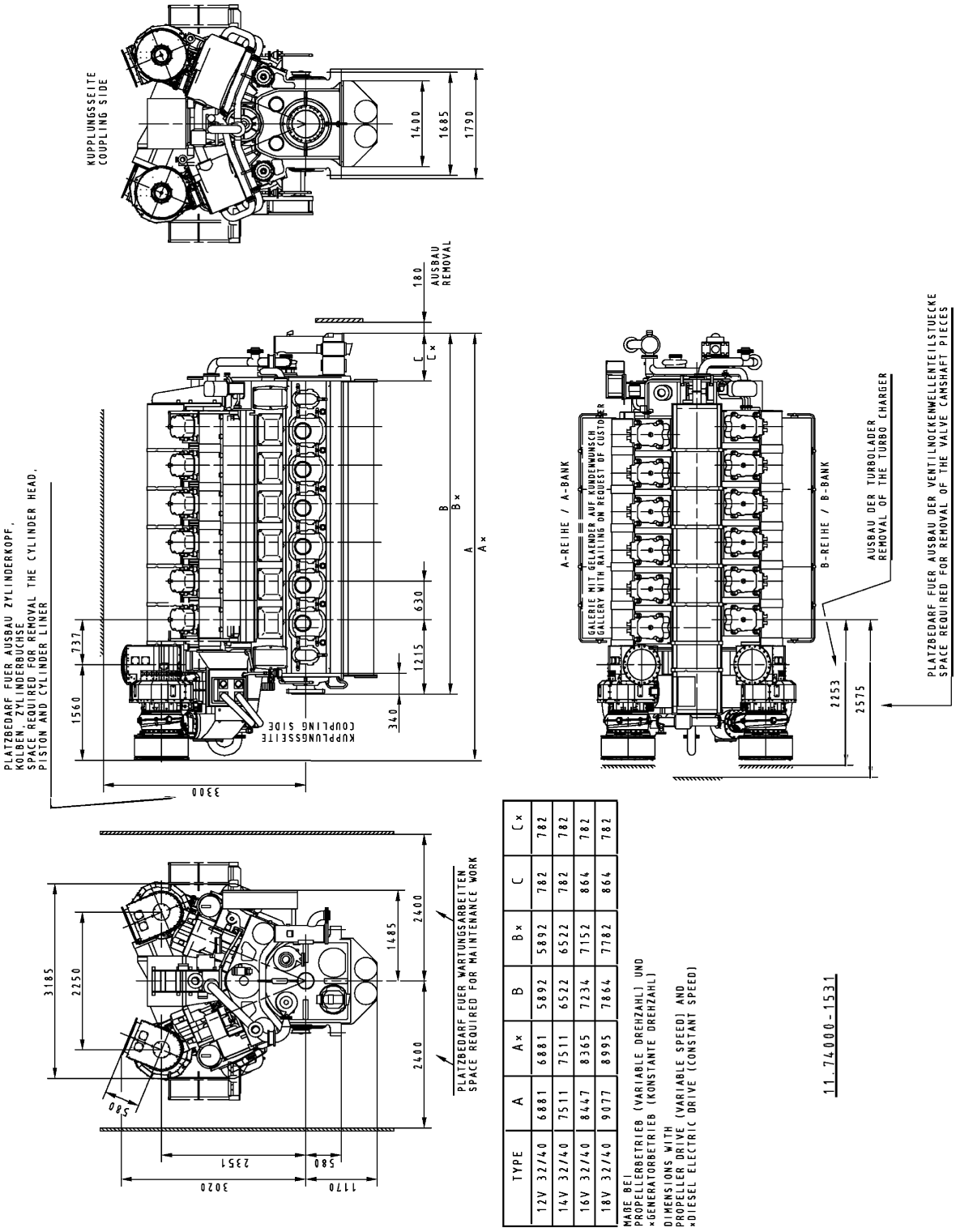

TYPE	A	A x	B	B x	C	C x
12V 32/40	6881	6881	5892	5892	782	782
14V 32/40	7511	7511	6522	6522	782	782
16V 32/40	8447	8365	7234	7152	864	782
18V 32/40	9077	8995	7864	7782	864	782

MAEE BEI
PROPELLERBETRIEB (VARIABLE DREHZAHL) UND
×GENERATORBETRIEB (KONSTANTE DREHZAHL)

DIMENSIONS WITH
PROPELLER DRIVE (VARIABLE SPEED) AND
×DIESEL ELECTRIC DRIVE (CONSTANT SPEED)

Figure 157: Installation drawing 12V-18V engine – Turbocharger on coupling side

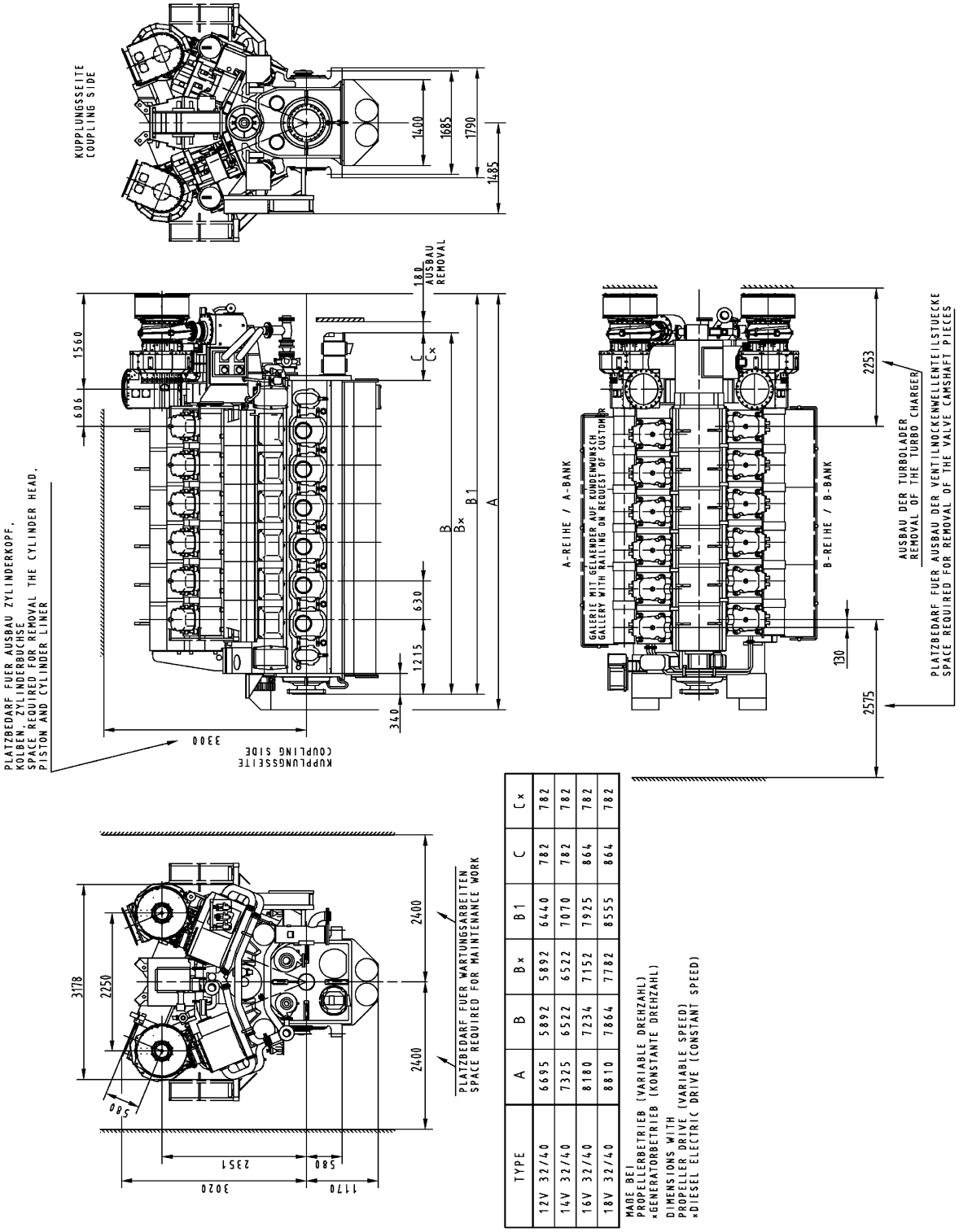

TYPE	A	B	Bx	B1	C	Cx
12V 32/40	6695	5892	5892	6440	782	782
14V 32/40	7325	6522	6522	7070	782	782
16V 32/40	8180	7234	7152	7925	864	782
18V 32/40	8810	7864	7782	8555	864	782

MAGE BEI
PROPELLERBETRIEB (VARIABLE DREHZAHL)
xGENERATORBETRIEB (KONSTANTE DREHZAHL)

DIMENSIONS WITH
PROPELLER DRIVE (VARIABLE SPEED)
xDIESEL ELECTRIC DRIVE (CONSTANT SPEED)

2025-06-16 - 1.0

Figure 158: Installation drawing 12V-18V engine – Turbocharger on counter coupling side

6.1.3 Removal dimensions of piston and cylinder liner

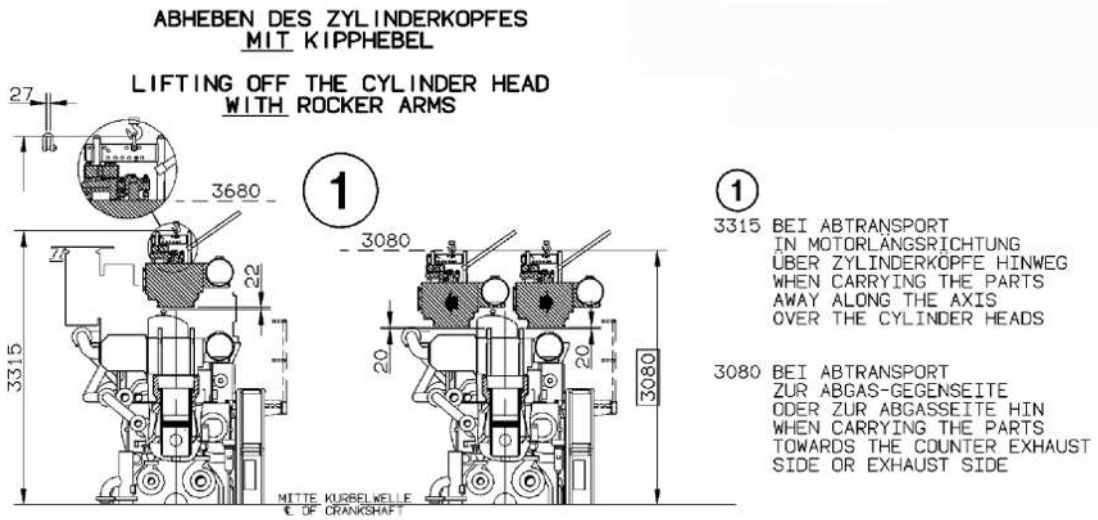

Figure 159: Piston removal – Lifting off the cylinder head with rocker arms – L engine

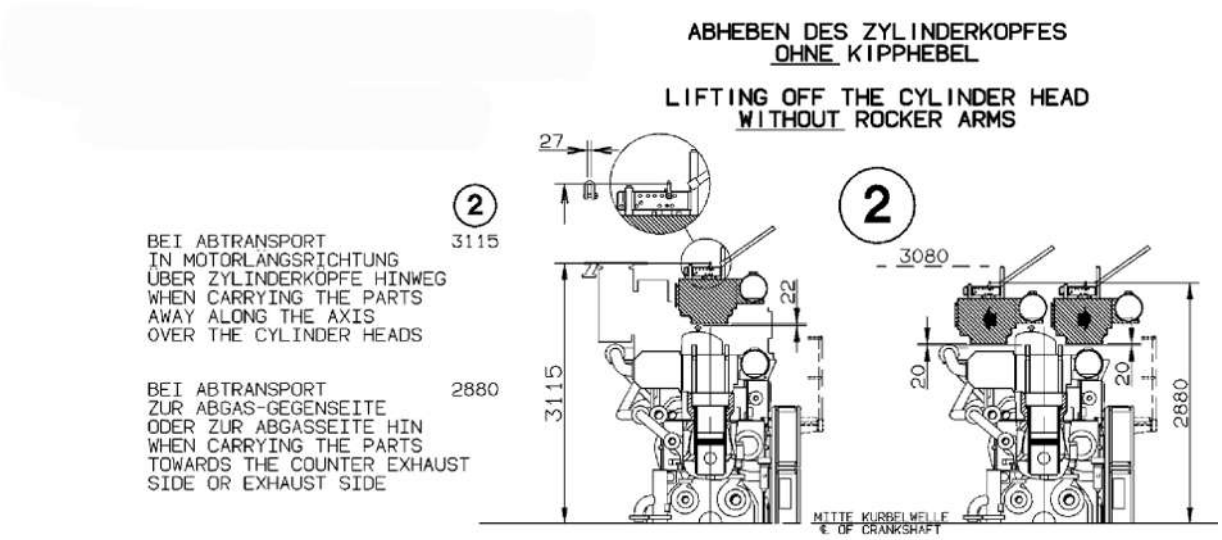

Figure 160: Piston removal – Lifting off the cylinder head without rocker arms – L engine

2025-06-16 - 1.0

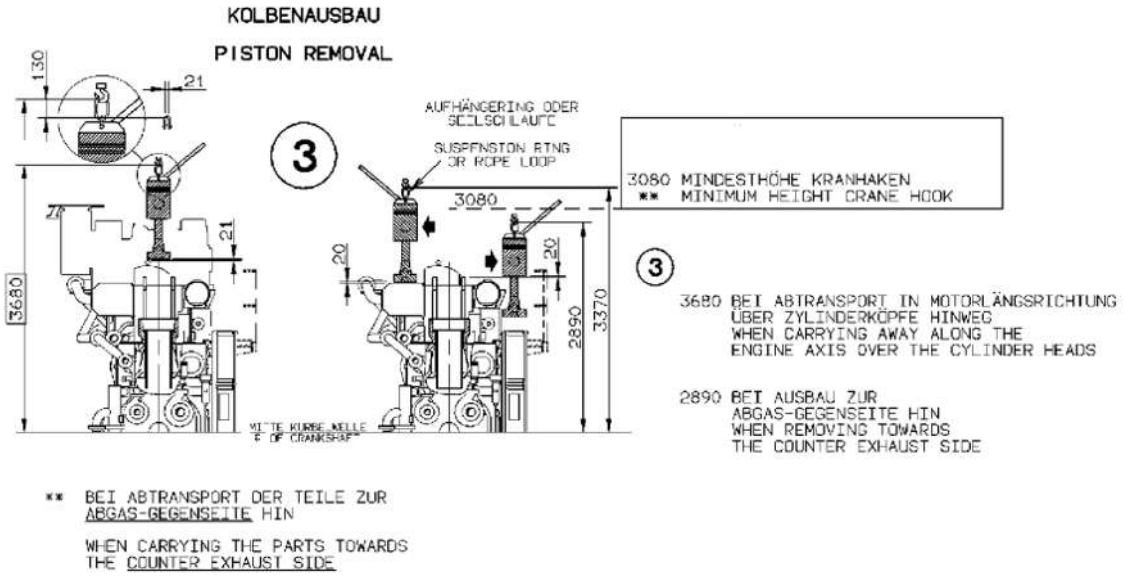

Figure 161: Piston removal – L engine

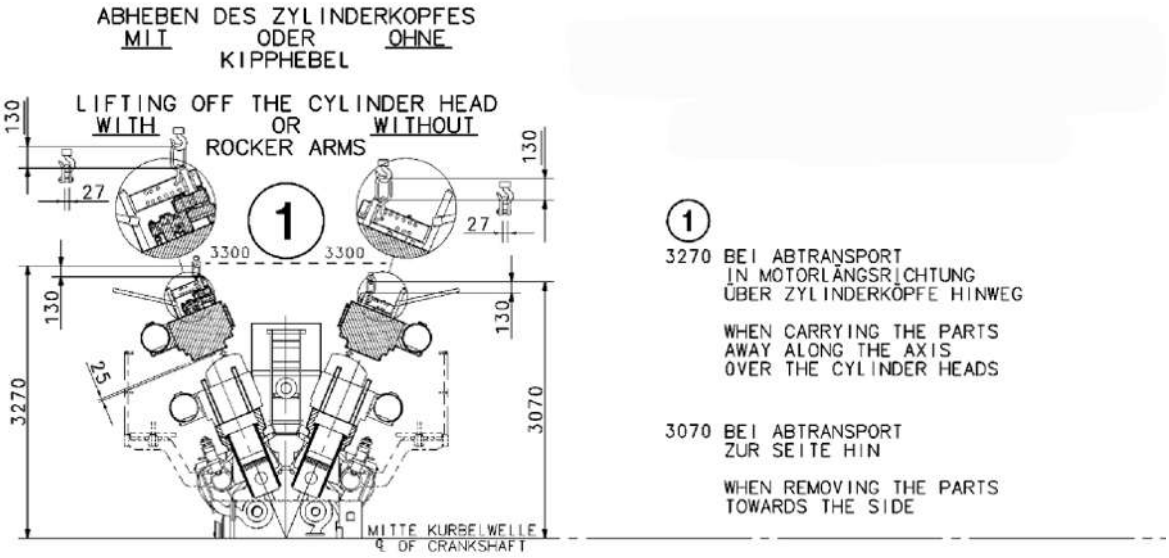

Figure 162: Piston removal – Lifting off the cylinder head with rocker arms – V engine

2025-06-16 - 1.0

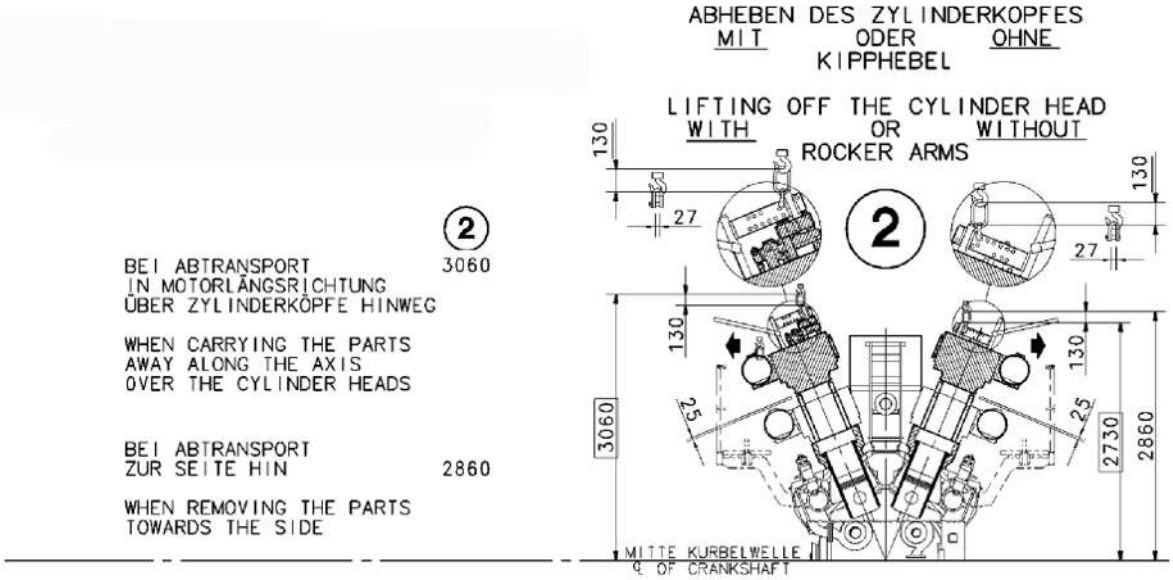

Figure 163: Piston removal – Lifting off the cylinder head without rocker arms – V engine

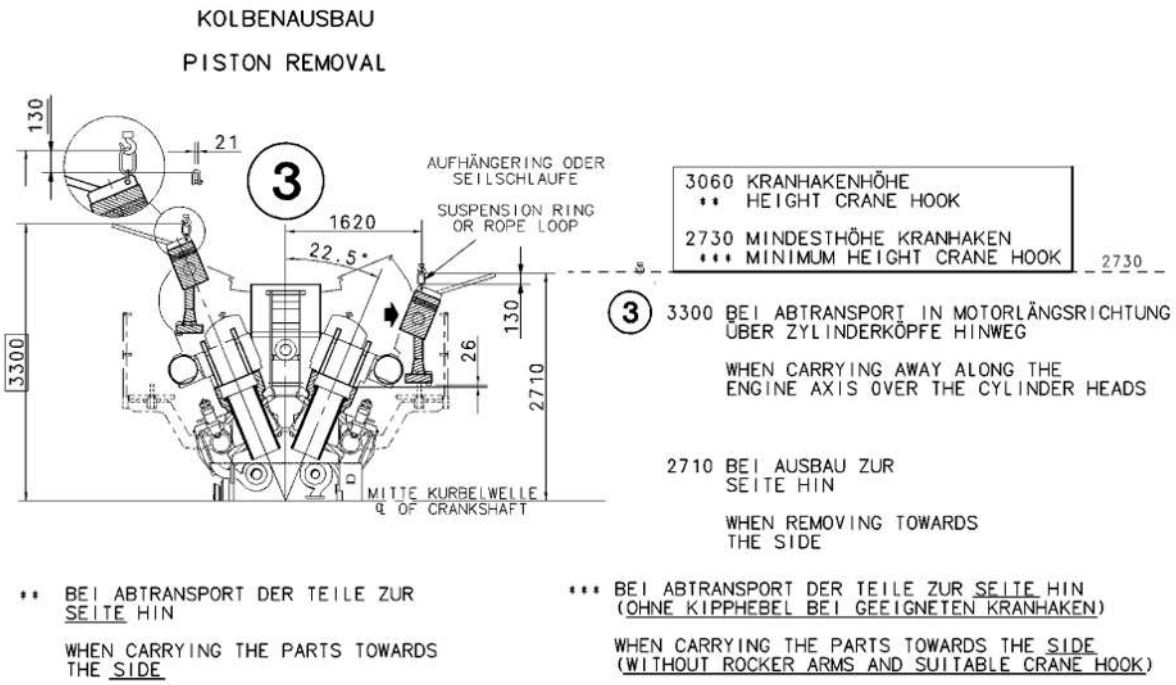

Figure 164: Piston removal – V engine

2025-06-16 - 1.0

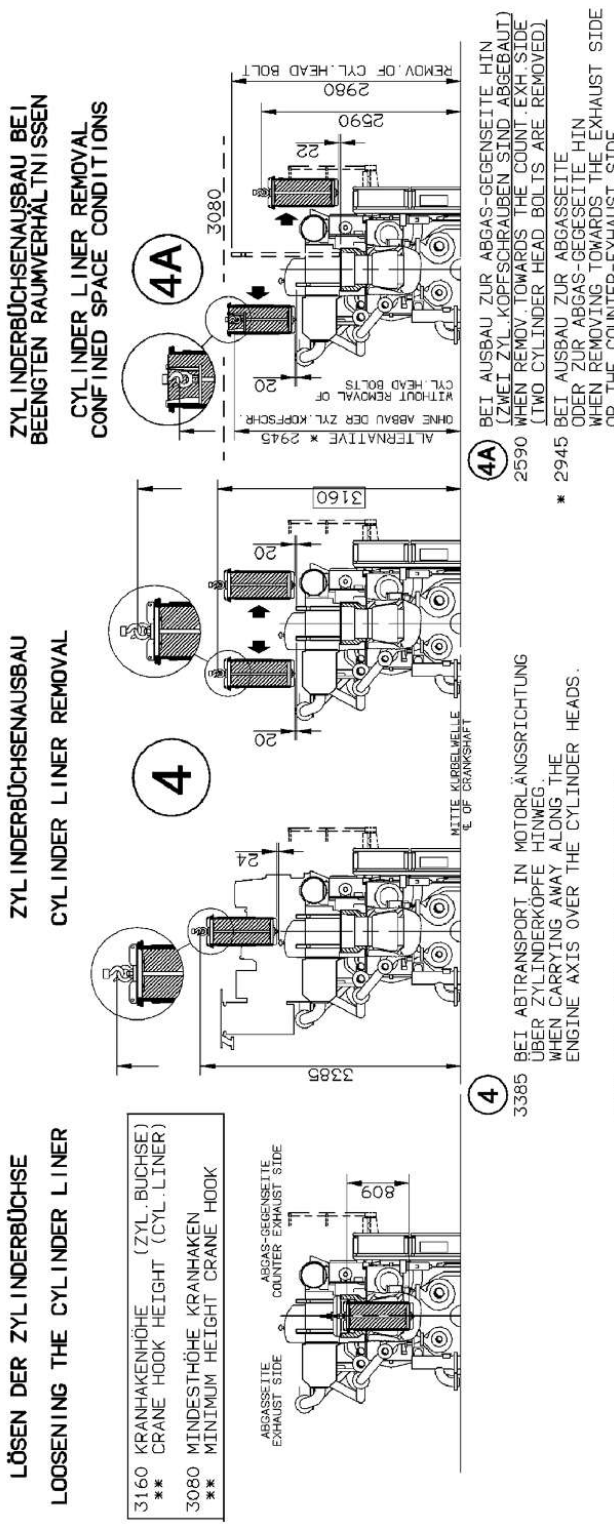

Figure 165: Cylinder liner removal – L engine

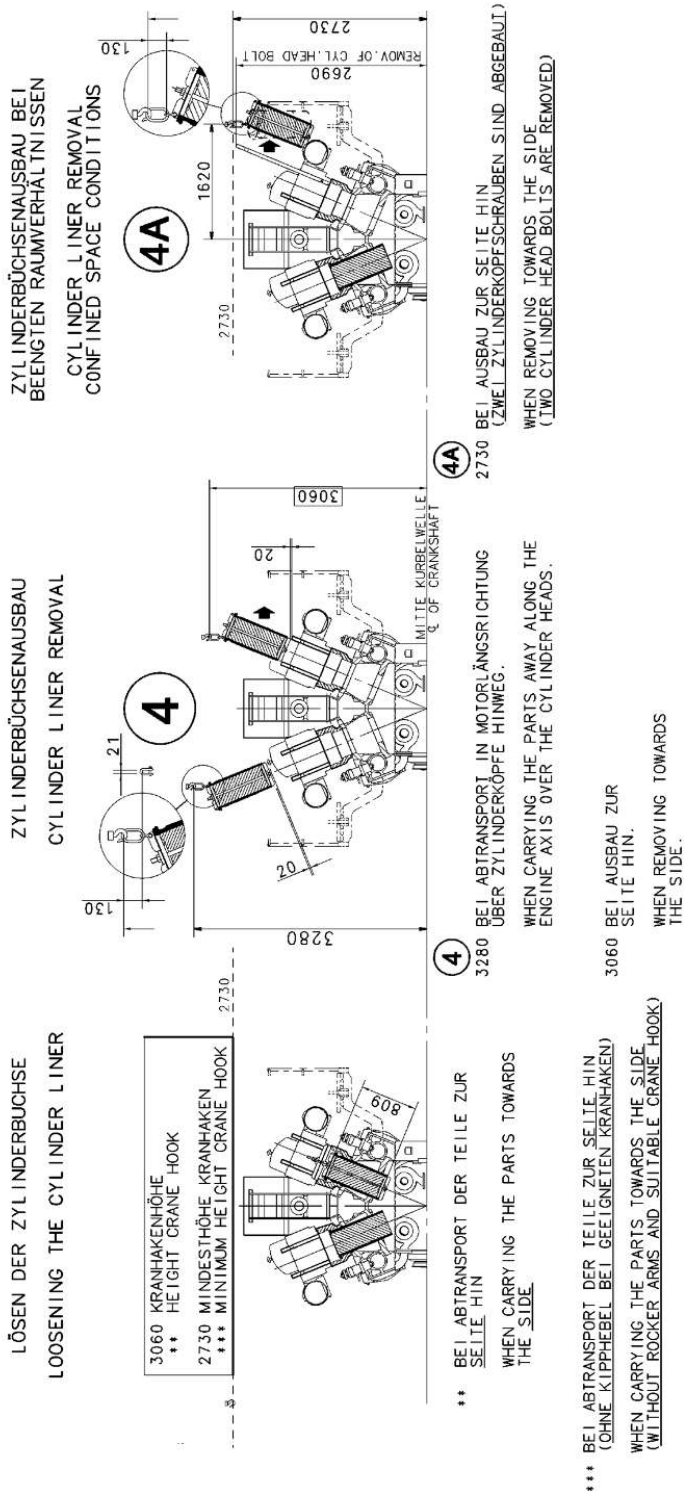

Figure 166: Cylinder liner removal – V engine

2025-06-16 - 1.0

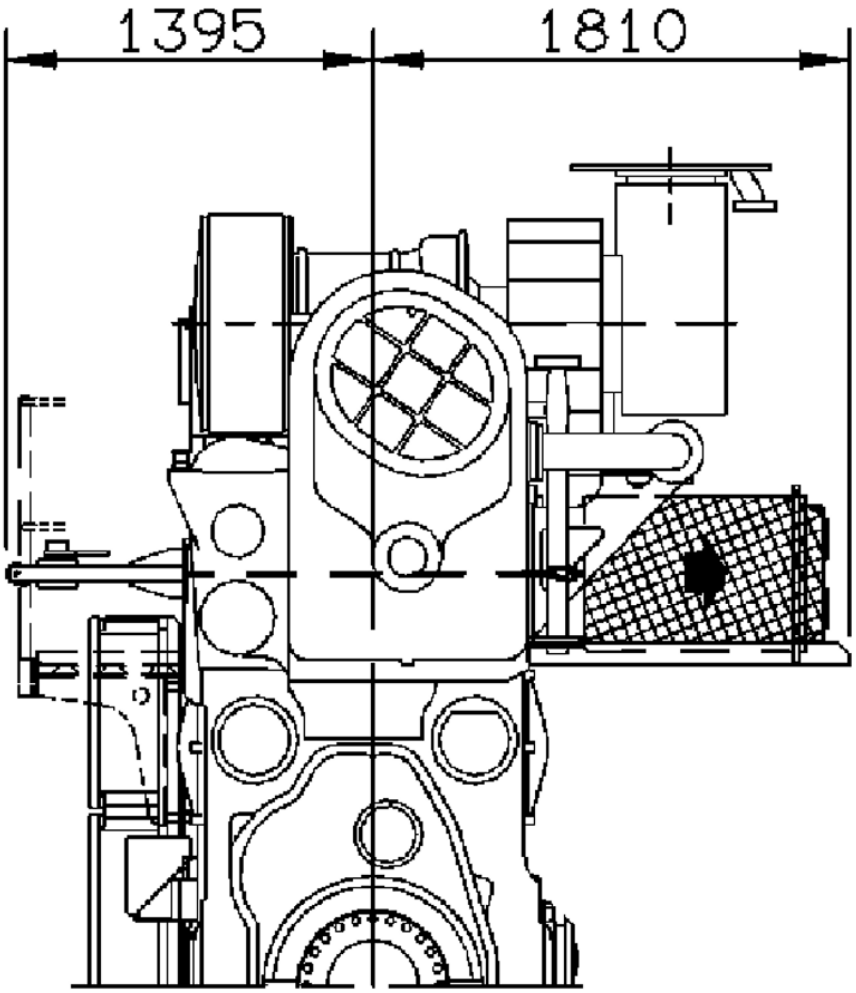

Figure 167: Charge air cooler removal – L engine

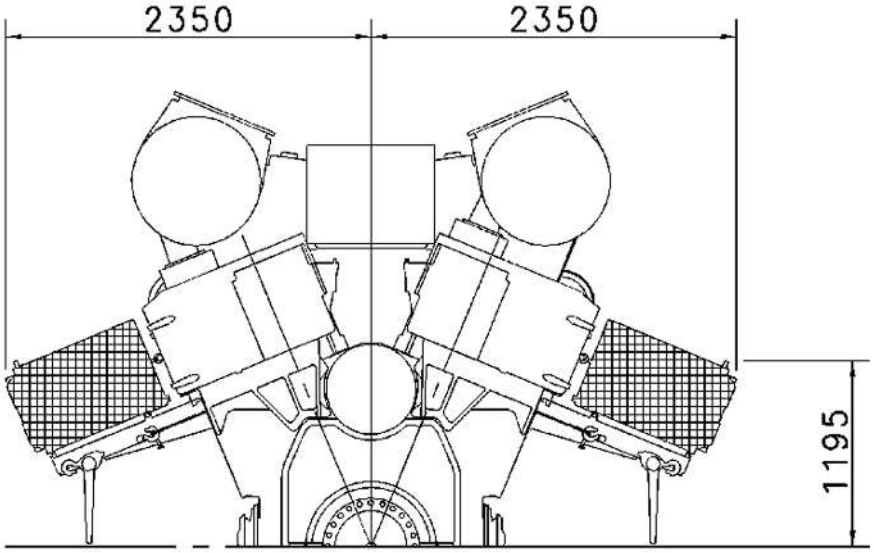

Figure 168: Charge air cooler removal – V engine

2025-06-16 - 1.0

6.1.4 3D Engine Viewer – A support programme to configure the engine room

MAN Energy Solutions offers a free-of-charge online programme for the configuration and provision of installation data required for installation examinations and engine room planning: The 3D Engine Viewer and the 3D GenSet Viewer.

Easy-to-handle selection and navigation masks permit configuration of the required engine type, as necessary for virtual installation in your engine room.

In order to be able to use the 3D Engine, respectively GenSet Viewer, register on our website under:

https://extranet.mandieselturbo.com/Pages/Dashboard.aspx

After successful registration, the 3D Engine and GenSet Viewer is available under:

https://extranet.mandieselturbo.com/content/appengineviewer/Pages/Default.aspx

by clicking onto the requested application.

In only three steps, you will obtain professional engine room data for your further planning:

- Selection

  Select the requested output, respectively the requested type.
- Configuration

  Drop-down menus permit individual design of your engine according to your requirements. Each of your configurations will be presented on the basis of isometric models.
- View

  The models of the 3D Engine Viewer and the 3D GenSet Viewer include all essential geometric and planning-relevant attributes (e.g. connection points, interfering edges, exhaust gas outlets, etc.) required for the integration of the model into your project.

The configuration with the selected engines can now be easily downloaded.

For 2D representation as:

- .pdf
- .dwg
- .dxf

for 3D as:

- .dgn
- .stp
- .sat
- .igs
- 3D-dxf
- and many others

2025-06-16 - 1.0

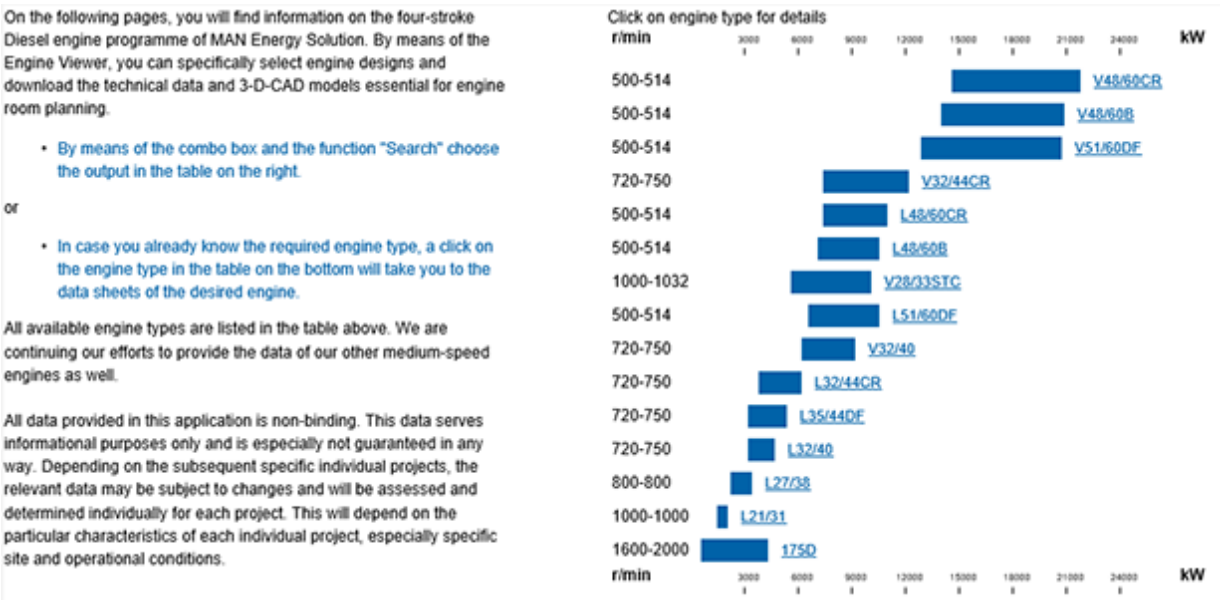

Figure 169: Selection of engine

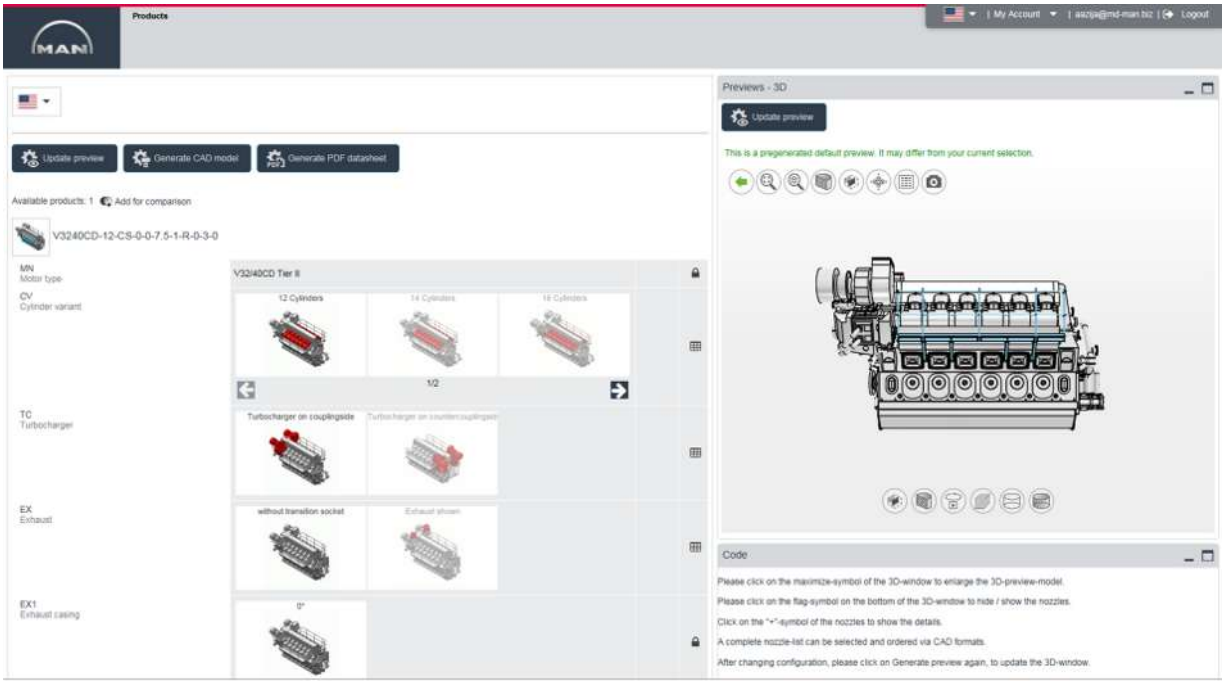

Figure 170: Preselected standard configuration

6.1.5 Lifting device

Lifting gear with varying lifting capacities are to be provided for servicing and repair work on the engine, turbocharger and charge air cooler.

Engine

Component weights

For servicing the engine an overhead traveling crane is required. The lifting capacity shall be sufficient to handle the heaviest component that has to be lifted during servicing of the engine and should foresee extra capacity e.g. to overcome the break loose torque while lifting cylinder heads. The overhead traveling crane can be chosen with the aid of the following table:

Components	Unit	Approximate weights
Cylinder head complete	kg	580
Piston with piston pin and connecting rod (for piston removal)		215
Cylinder liner		175
Charge air cooler		380

Table 181: Component weights

Crane arrangement

The rails for the crane are to be arranged in such a way that the crane can cover the whole of the engine beginning at the exhaust pipe.

The hook position must reach along the engine axis, past the centreline of the first and the last cylinder, so that valves can be dismantled and installed without pulling at an angle.

Similarly, the crane must be able to reach the tie rod at the ends of the engine. In cramped conditions, eyelets must be welded under the deck above, to accommodate a lifting pulley.

The required crane capacity is to be determined by the crane supplier.

Crane design

It is necessary that:

- There is an arresting device for securing the crane while hoisting if operating in heavy seas
- There is a two-stage lifting speed

  Precision hoisting approximately = 0.5 m/min

  Normal hoisting approximately = 2 – 4 m/min

Places of storage

In planning the arrangement of the crane, a storage space must be provided in the engine room for the dismantled engine components which can be reached by the crane. It should be capable of holding two rocker arm casings, two cylinder covers and two pistons. If the cleaning and service work is to be carried out here, additional space for cleaning troughs and work surfaces should be planned.

Transport to the workshop

Grinding of valve cones and valve seats is carried out in the workshop or in a neighbouring room.

Transport rails and appropriate lifting tackle are to be provided for the further transport of the complete cylinder cover from the storage space to the workshop. For the necessary deck openings, see following figures and tables.

Turbocharger

Section Turbocharger assignments, Page 35 shows which turbocharger type should be used for which engine variant.

Turbocharger dimensions

2025-06-16 - 1.0

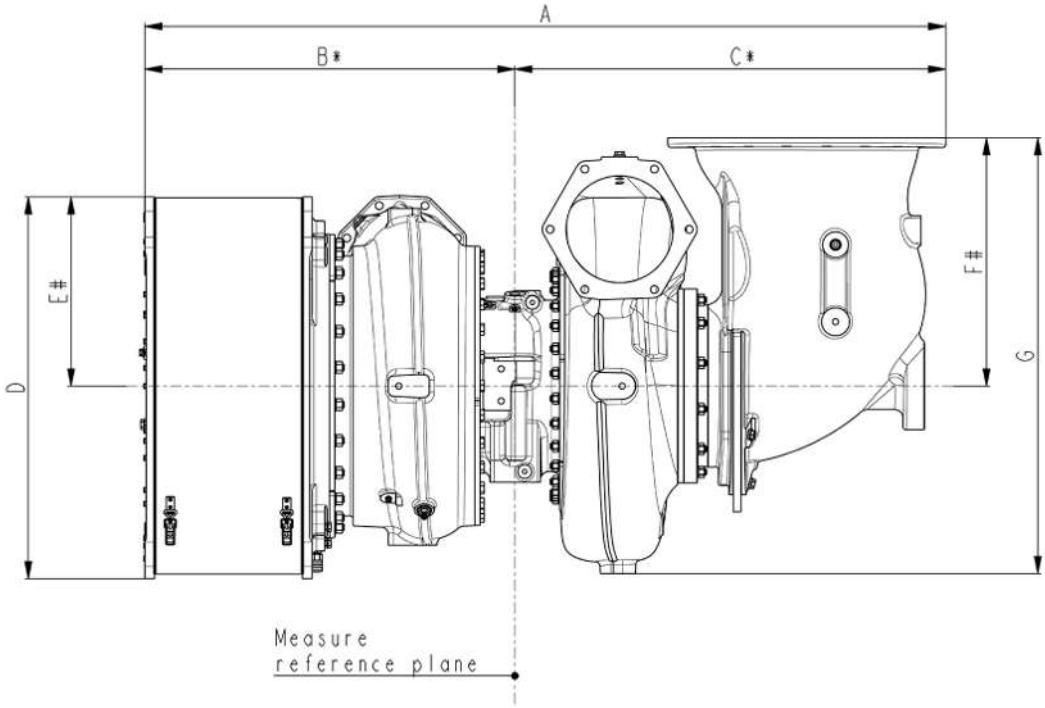

Figure 171: Exemplary illustration of TCF turbocharger

Turbocharger type	A [mm]	B [mm]	C [mm]	D [mm]	E [mm]	F [mm]	G [mm]
TCF20	1,873	865	1,008	890	440	580	1,018

Table 182: Dimensions – TCF turbocharger

Hoisting rail

A hoisting rail with a mobile trolley is to be provided over the centre of the turbocharger running parallel to its axis, into which a lifting tackle is suspended with the relevant lifting power for lifting the parts, which are mentioned in the table(s) below, to carry out the operations according to the maintenance schedule.

Turbocharger		TCF20
Compressor casing	kg	243
Gas admission casing		307
Silencer		156
Cartridge		276-278
Turbine rotor		59-61
Bearing casing		217
Space for removal of silencer	mm	210

Table 183: Hoisting rail of the TCF turbocharger

2025-06-16 - 1.0

Withdrawal space dimensions

The withdrawal space shown in section Removal dimensions, Page 425 and in the table(s) in paragraph Hoisting rail, Page 434 is required for separating the silencer from the turbocharger. The silencer must be shifted axially by this distance before it can be moved laterally.

In addition to this measure, another 100 mm are required for assembly clearance.

This is the minimum distance between silencer and bulkhead or tween-deck. We recommend to plan additional 300 – 400 mm as working space.

Make sure that the silencer can be removed either downwards or upwards or laterally and set aside, to make the turbocharger accessible for further servicing. Pipes must not be laid in these free spaces.

Fan shafts

The engine combustion air is to be supplied towards the intake silencer in a duct ending at a point 1.5 m away from the silencer inlet. If this duct impedes the maintenance operations, for instance the removal of the silencer, the end section of the duct must be removable. Suitable suspension lugs are to be provided on the deck and duct.

Gallery

If possible the ship deck should reach up to both sides of the turbocharger (clearance 50 mm) to obtain easy access for the maintenance personnel. Where deck levels are unfavourable, suspended galleries are to be provided.

Charge air cooler

For cleaning of the charge air cooler bundle, it must be possible to lift it vertically out of the cooler casing and lay it in a cleaning bath.

Exception 32/40CD: The cooler bundle of this engine is drawn out at the end. Similarly, transport onto land must be possible.

For lifting and transportation of the bundle, a lifting rail is to be provided which runs in transverse or longitudinal direction to the engine (according to the available storage place), over the centreline of the charge air cooler, from which a trolley with hoisting tackle can be suspended.

2025-06-16 - 1.0

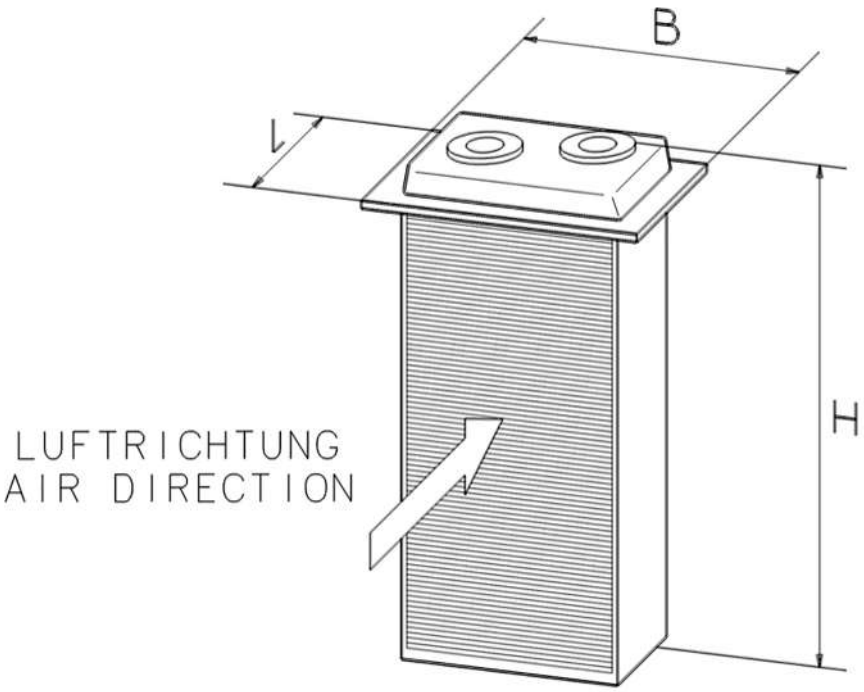

Figure 172: Air direction

Engine type	Weight	Length (L)	Width (B)	Height (H)
	kg	mm	mm	mm
L/V engine	650	430	1,705	830

Table 184: Weights and dimensions of charge air cooler bundle

2025-06-16 - 1.0

6.1.6 Space requirement for maintenance

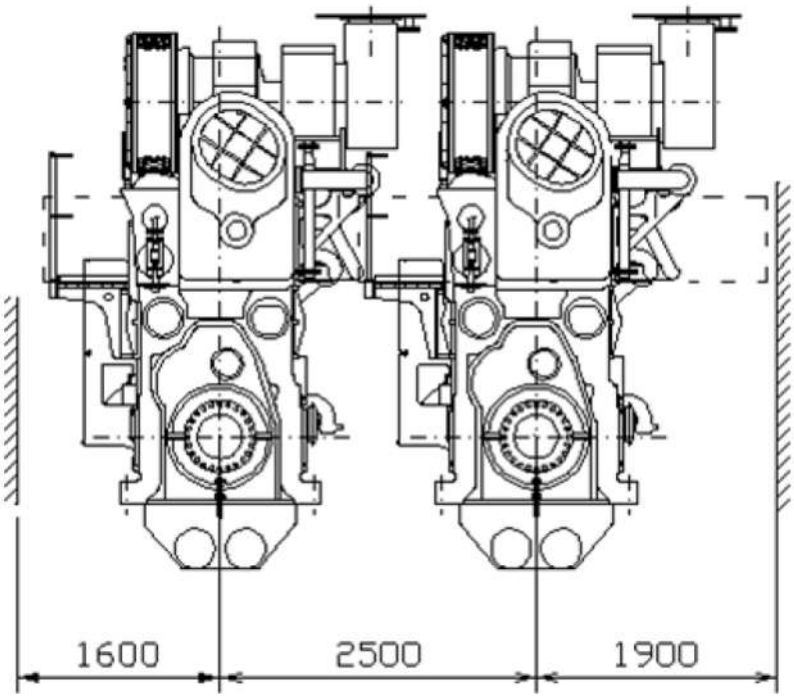

Figure 173: Space requirements for maintenance – L engine

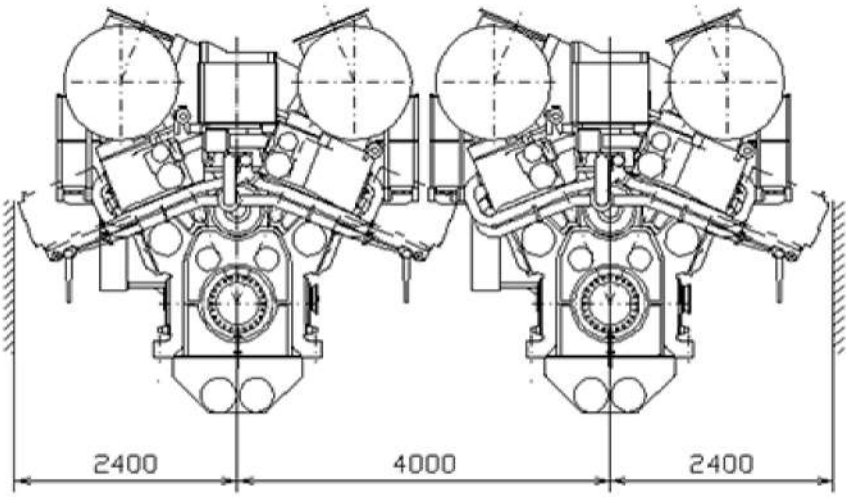

Figure 174: Space requirements for maintenance – V engine

Note:
Specific requirements to the passageway e.g. of the classification societies or flag state authority may result in a higher space demand.

2025-06-16 - 1.0

6.1.7 Major spare parts

Cylinder liner
172,31 kg

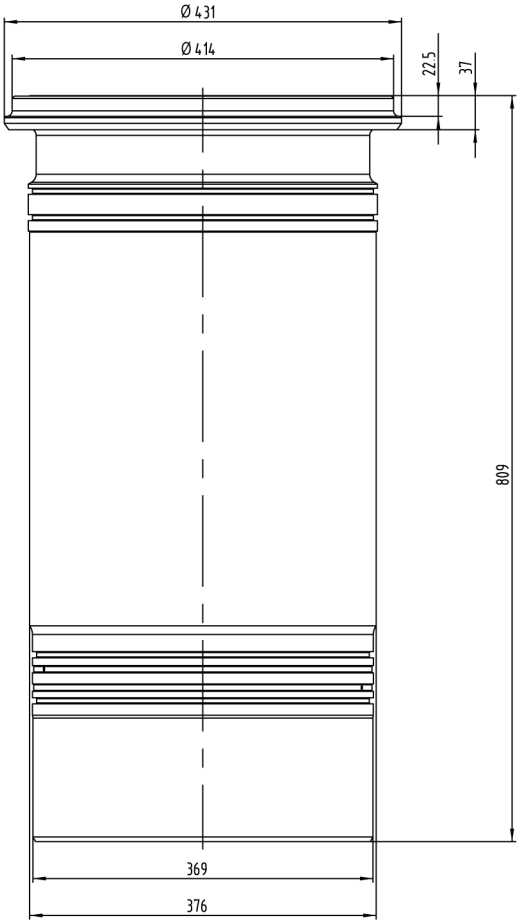

Fire land ring
38,61 kg

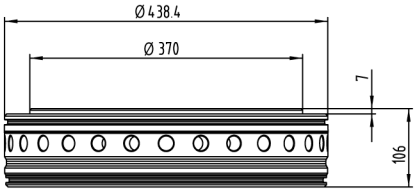

Composite piston complete with piston pin
only conventional
122,25 kg

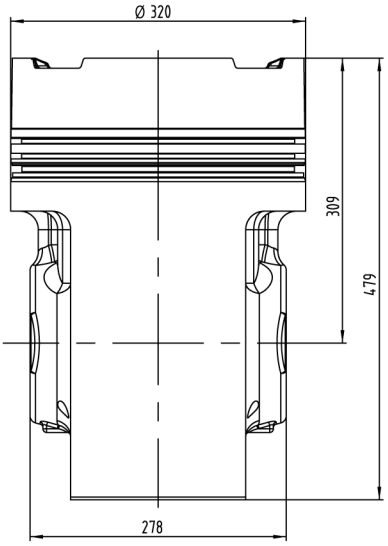

Piston bolt
31,5 kg

11000230874

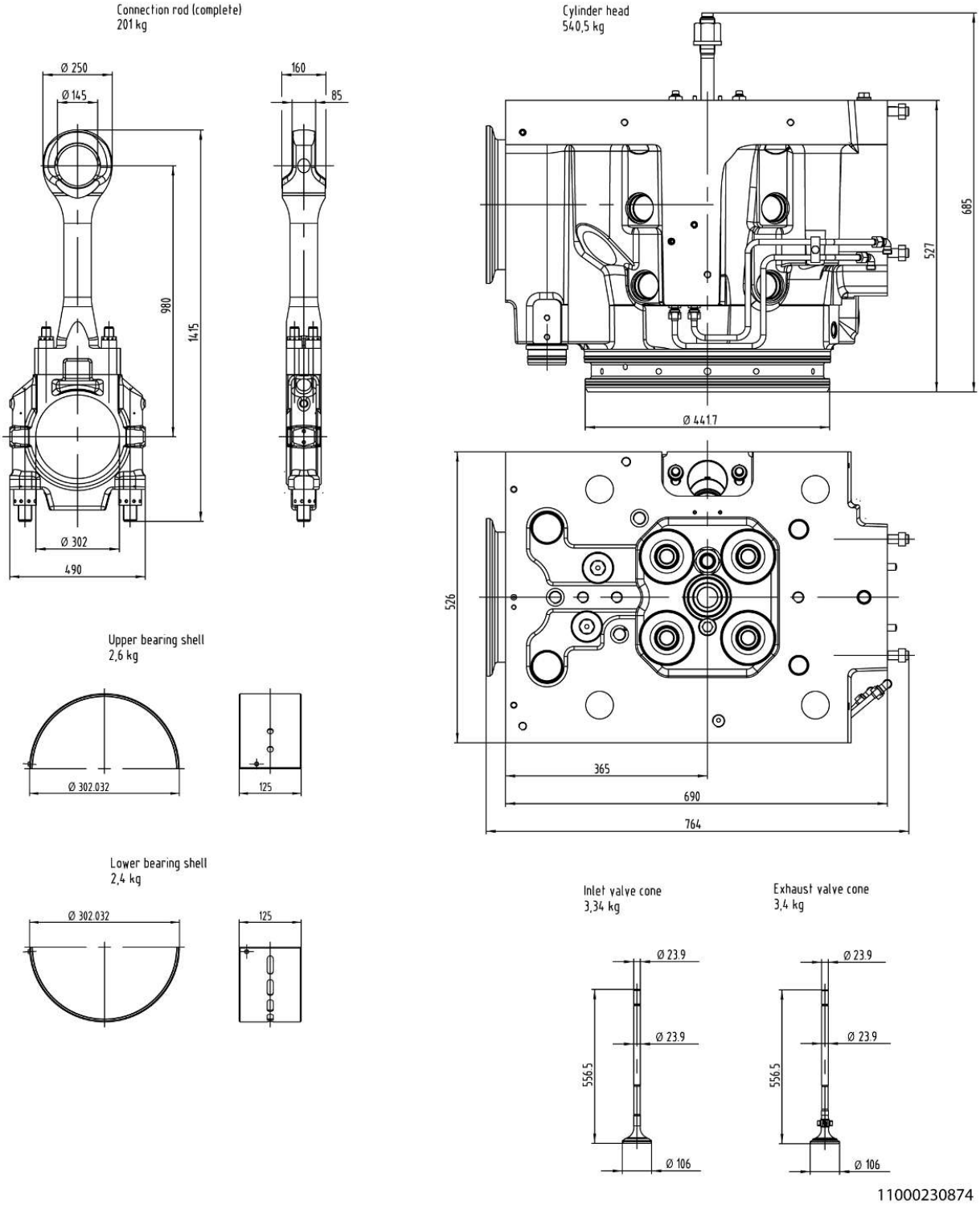
Connection rod (complete)
201 kg
Ø 250
Ø 145
980
1415
Ø 302
490
160
85
Cylinder head
540,5 kg
685
527
Ø 441,7
526
365
690
764
Upper bearing shell
2,6 kg
Ø 302.032
125
Lower bearing shell
2,4 kg
Ø 302.032
125
Inlet valve cone
3,34 kg
Exhaust valve cone
3,4 kg
Ø 23.9
Ø 23.9
556.5
Ø 106
Ø 23.9
Ø 23.9
556.5
Ø 106
11000230874

2025-06-16 - 1.0

Tierod only L-engine
23,5 kg

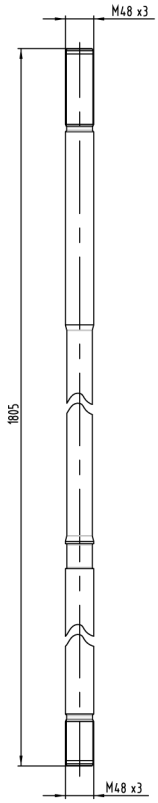

Tierod cylinder head
only L-engine
19,35 kg

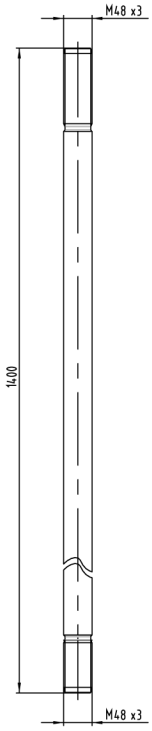

Stud screw only L-engine
3,36 kg

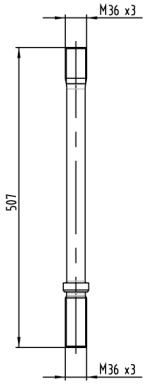

Stud screw only V-engine
5,25 kg

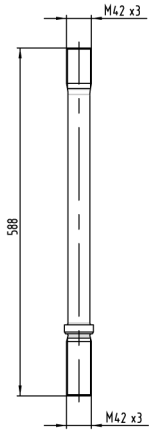

Tierod only V-engine
18,4 kg

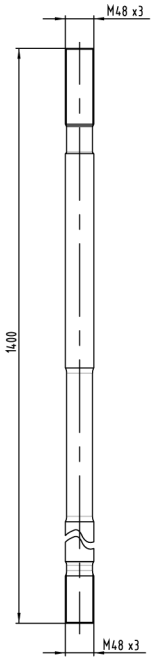

Tierod only V-engine
35,5 kg

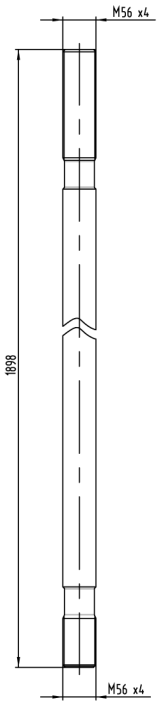

11000230874A

2025-06-16 - 1.0

Crankshaft upper bearing shell
only L-engine
2,45 kg

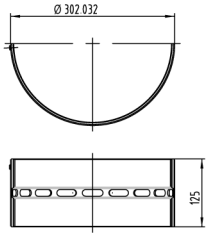

Crankshaft lower bearing shell
only L-engine
2,65 kg

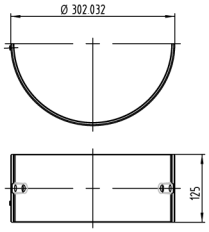

Crankshaft upper bearing shell
only V-engine
2,9 kg

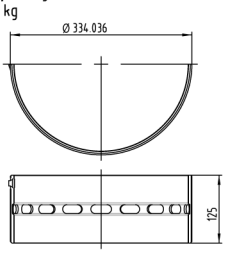

Crankshaft lower bearing shell
only V-engine
3,18 kg

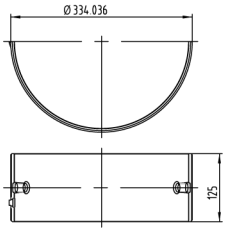

Vibration damper only L-engine
1462 kg

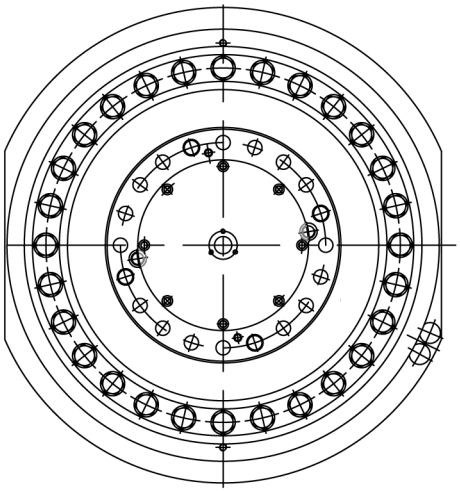

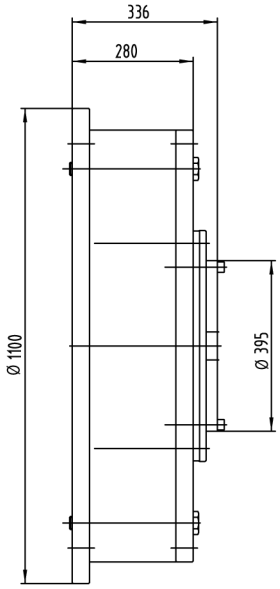

Vibration damper only V-engine
1368 kg

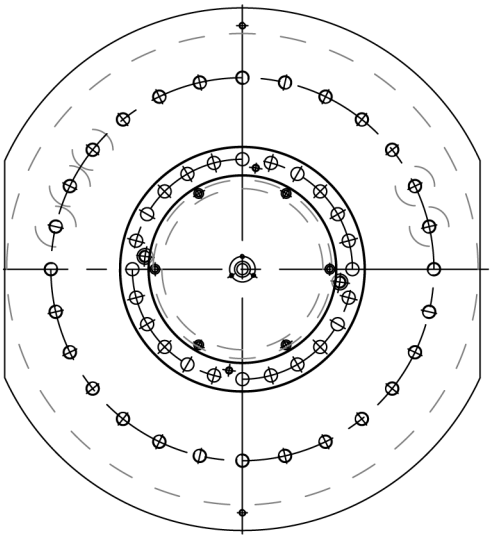

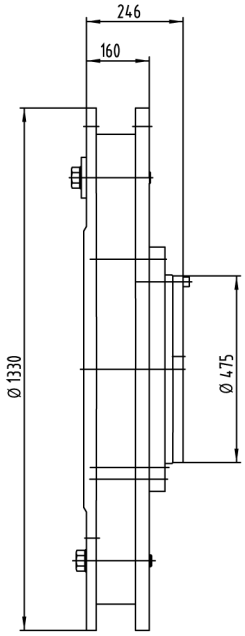

11000230874

2025-06-16 - 1.0

6.1.8 Mechanical propulsion system arrangement

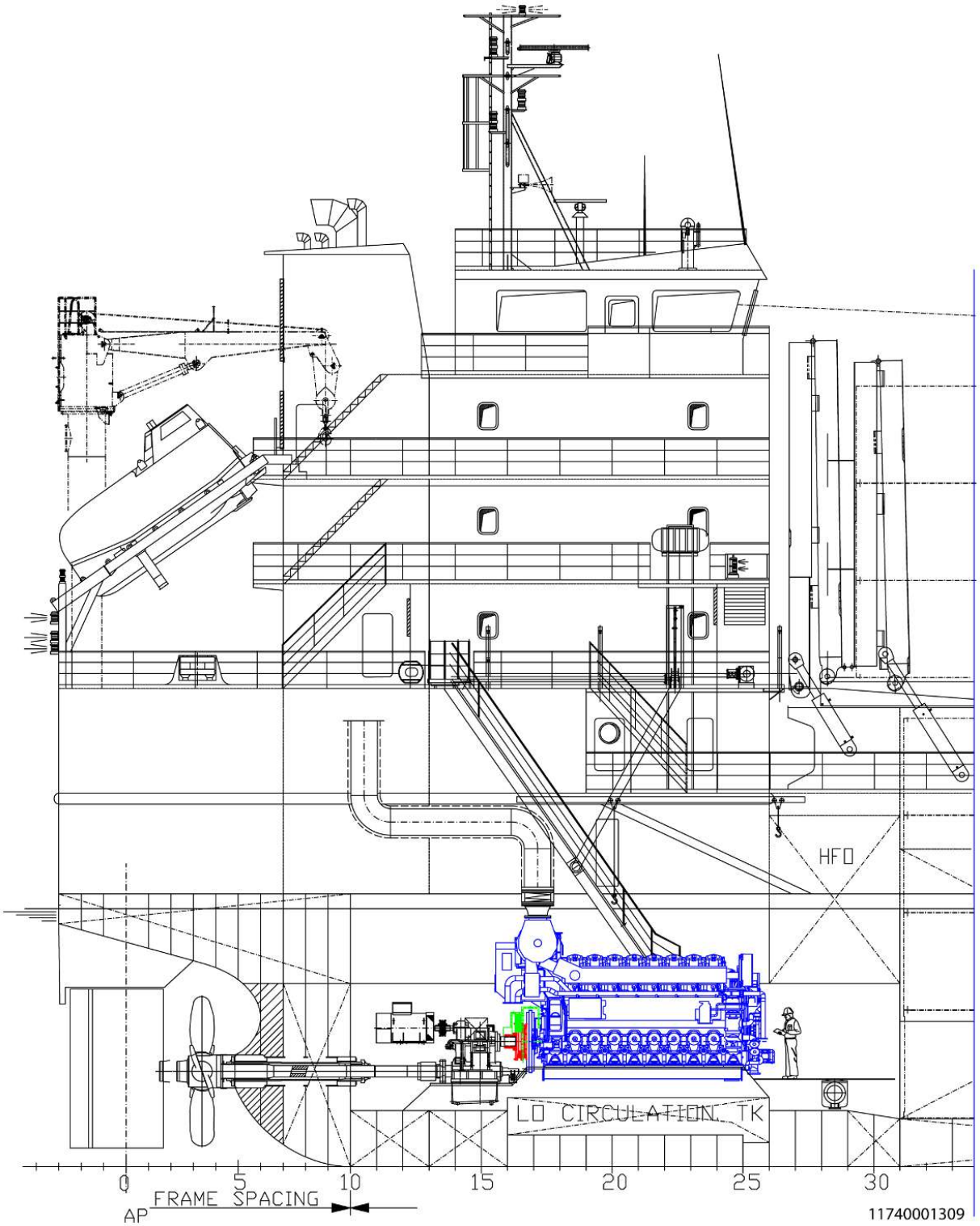

Figure 175: Example: Propulsion system arrangement

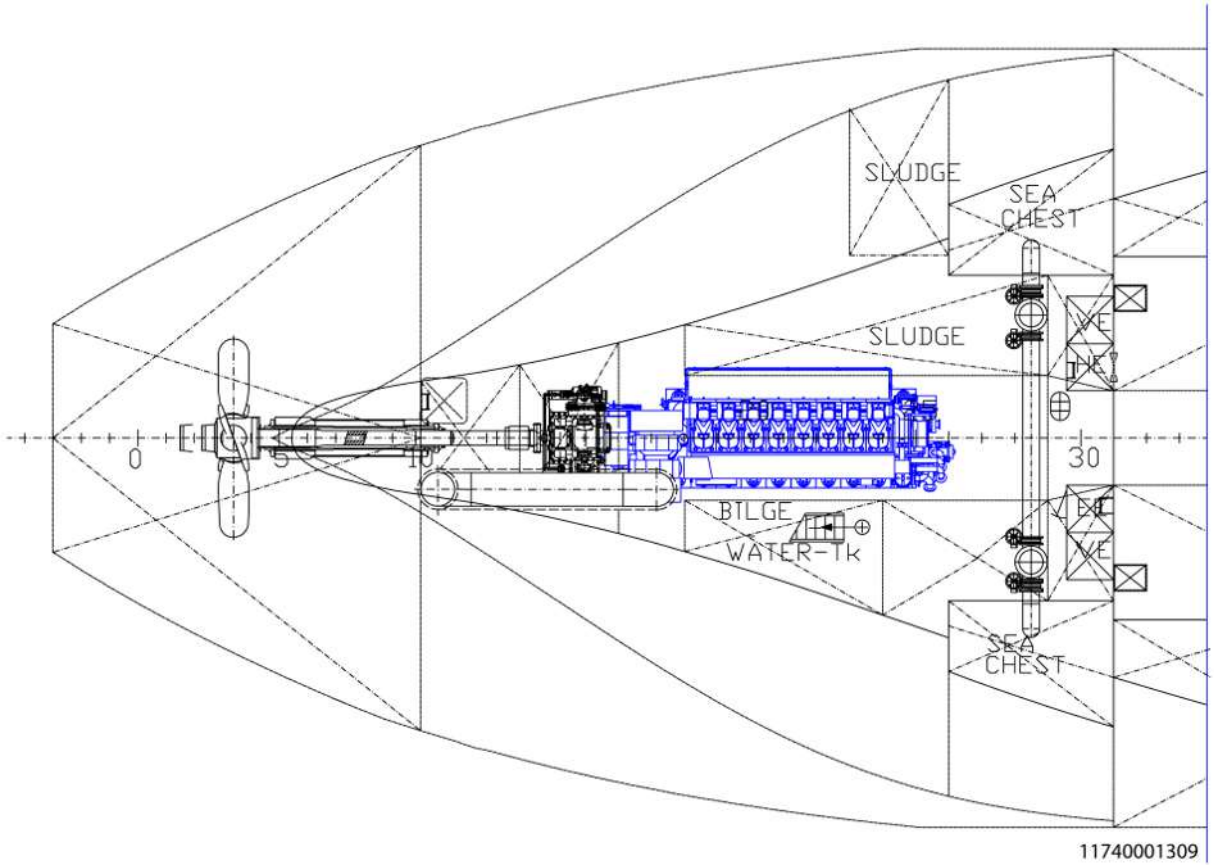

Figure 176: Example: Engine room and engine arrangement; top view

2025-06-16 - 1.0

6.2 Exhaust gas ducting

6.2.1 Example: Ducting arrangement

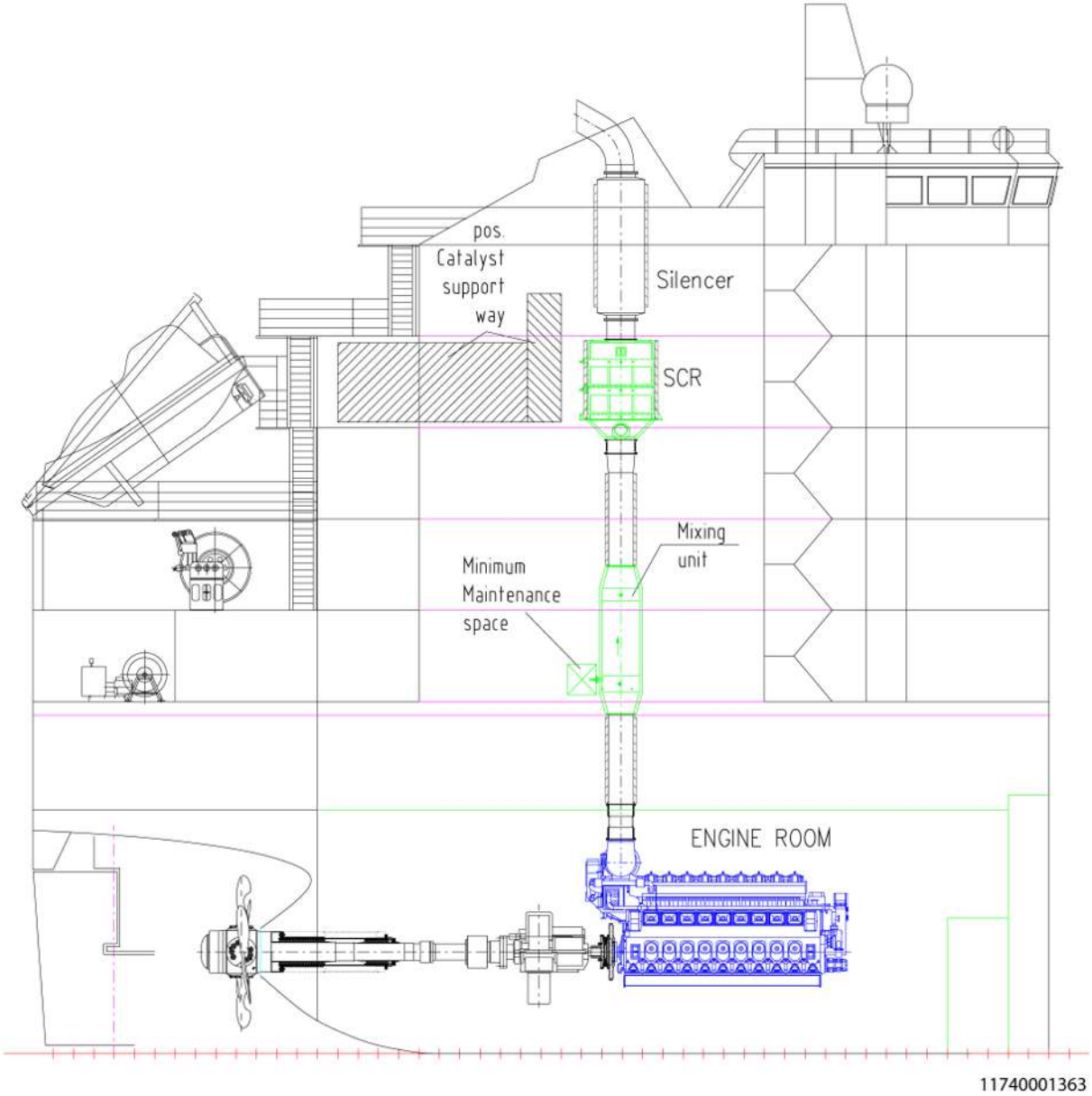

Figure 177: Example: Exhaust gas ducting arrangement

Fix point support

The engine related compensator has to be connected directly to the exhaust gas outlet of the turbocharger (installation of compensator vertically or max. 45° position after turbocharger). In case that the compensator cannot be directly connected to the exhaust gas outlet of the turbocharger, contact MAN Energy Solutions. Immediately downstream of the engine related compensator, it is required to install a strong and rigid fix point to support the ex-

2025-06-16 - 1.0

haust gas pipe. It is not permitted to compensate with the engine related compensator movements or vibrations coming from components or systems installed downstream of this compensator.

6.2.2 External general details for Tier III SCR system duct arrangement

MAN Energy Solutions recommends that the SCR reactor housing should be mounted before all other components (e.g. boiler, silencer) in the exhaust duct, coming from the engine side. A painting on the inside wall of the exhaust duct in front of the SCR system is not permissible.

All of the spaces/openings for cleaning and maintenance on the entire unit, including air reservoir module, dosing unit and reactor housing with soot-blowers must be accessible.

We strongly recommend that in front of the reactor housing sufficient space for the maintenance personal and/or for the temporary storage of the catalyst honeycombs has to be foreseen (see section SCR system, Page 413).

Catalyst elements could reach a weight of 25 kg, the reactor openings could reach a total weight of about 70 kg, MAN Energy Solutions strongly recommends a lifting capability above the reactors.

A very important point is the transportation way and storage space of the catalyst honeycombs within the funnel for supply of the SCR reactor during maintenance or catalyst refreshment, one reactor could contain more than 100 elements.

To avoid time-consuming or implementation of a scaffolding, MAN Energy Solutions strongly recommends at minimum a lifting device in the funnel or any kind of material elevator. A porthole from outside rooms on level with the reactor housing is also a possibility, as far as those rooms could be supplied with the catalyst honeycombs.

2025-06-16 - 1.0

6.2.3 Position of the outlet casing of the turbocharger

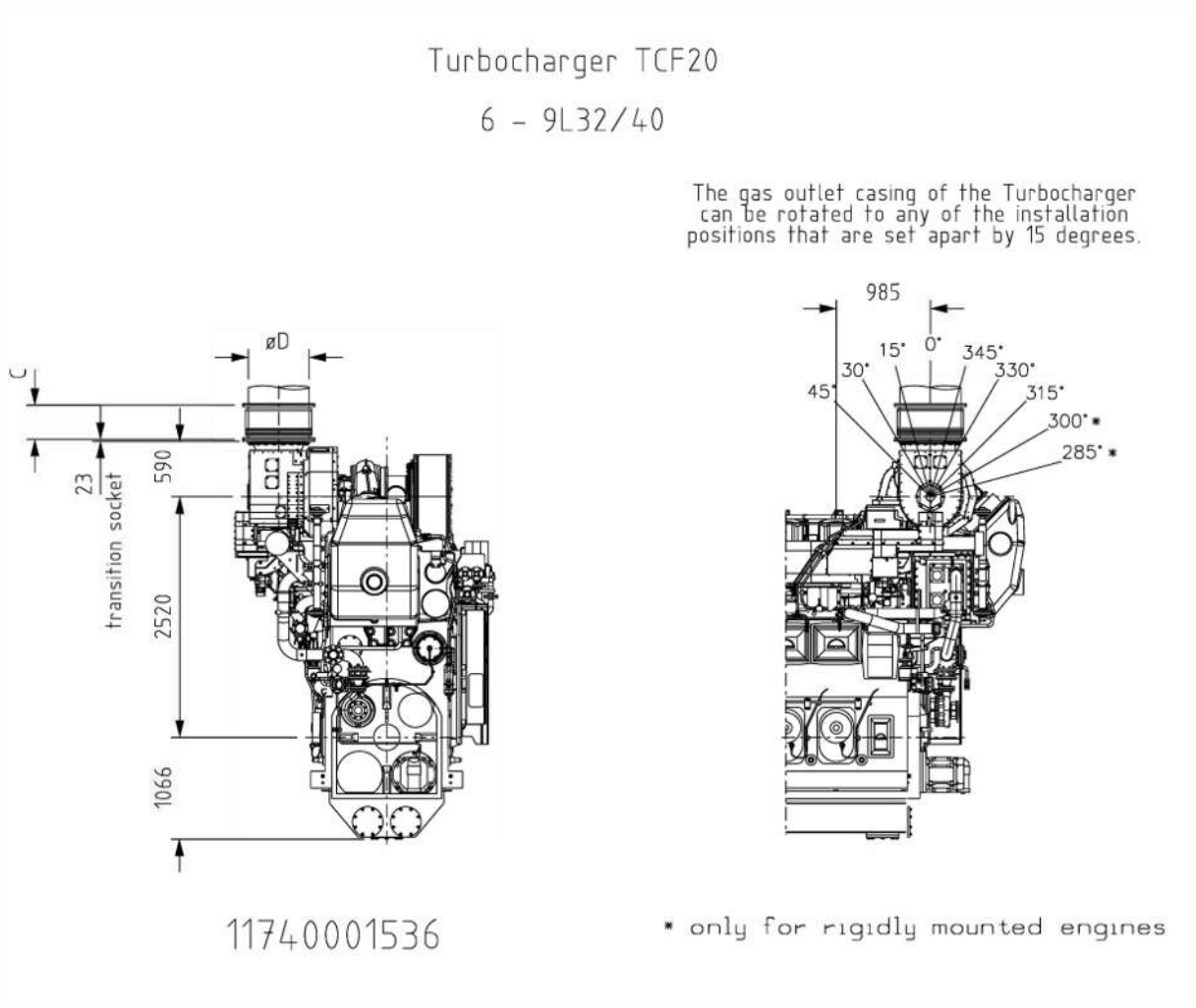

Figure 178: Position of the outlet casing of the turbocharger – L engine

Number of cylinders, config.		6L	7L	8L	9L
Turbocharger		TCF20	TCF20	TCF20	TCF20
C[1]	mm	372	372	367	367
C[2]		1,004	1,004	1,063	1,063
D		600	600	700	700

[1] For rigidly mounted engines.

[2] For resiliently mounted engines.

Table 185: Position of the outlet casing of the turbocharger – L engine

2025-06-16 - 1.0

To be defined

Figure 179: Position of the outlet casing of the turbocharger – V engine

Number of cylinders, config.		12V	14V	16V	18V
Turbocharger		TCF20	TCF20	TCF20	TCF20
A	mm	590	590	590	590
B		TBD	TBD	TBD	TBD
C[1)]		TBD	TBD	TBD	TBD
C[2)]		TBD	TBD	TBD	TBD
D		TBD	TBD	TBD	TBD
E		TBD	TBD	TBD	TBD
F		TBD	TBD	TBD	TBD

[1)] For rigidly mounted engines.

[2)] For resiliently mounted engines.

Table 186: Position of the outlet casing of the turbocharger – V engine

2025-06-16 - 1.0

This page is intentionally left blank

2025-06-16 - 1.0

7 Propulsion packages

7.1 General

MAN Energy Solutions standard propulsion packages

The MAN Energy Solutions standard propulsion packages are optimised at 90 % MCR, 100 % rpm and 96.5 % of the ship speed. The propeller is calculated with the class notation "No Ice" and high skew propeller blade design. These propulsion packages are examples of different combinations of engines, gearboxes, propellers and shaft lines according to the design parameters above. Due to different and individual aft ship body designs and operational profiles your inquiry and order will be carefully reviewed and all given parameters will be considered in an individual calculation. The result of this calculation can differ from the standard propulsion packages by the assumption of e.g. a higher Ice Class or different design parameters.

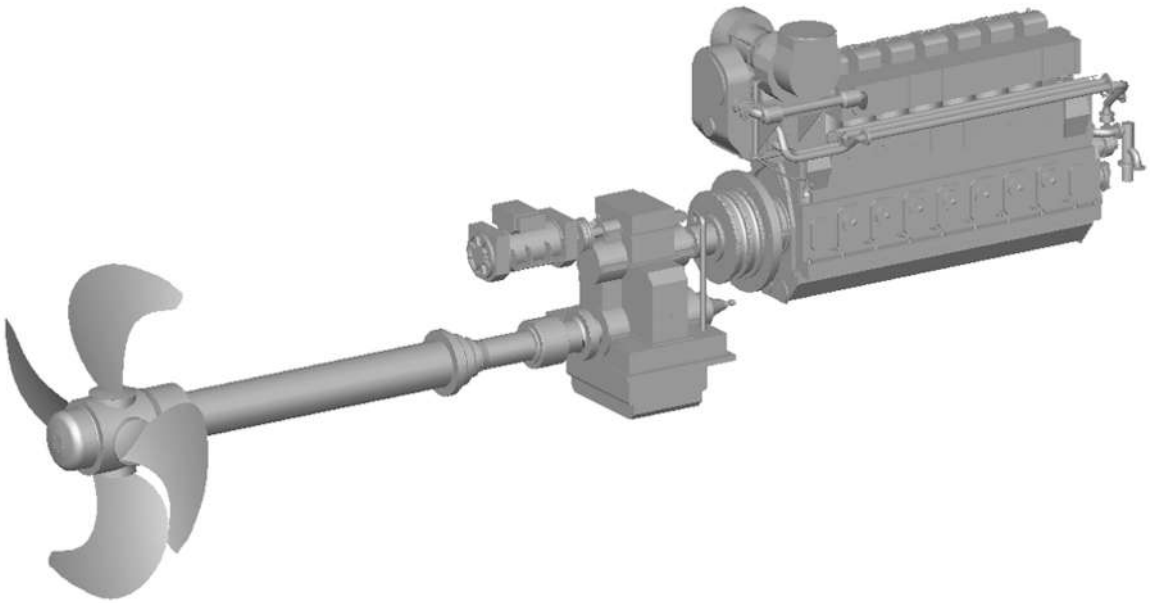

Figure 180: MAN Energy Solutions standard propulsion package with engine MAN 7L32/40 (example)

2025-06-16 - 1.0

7.2 Dimensions

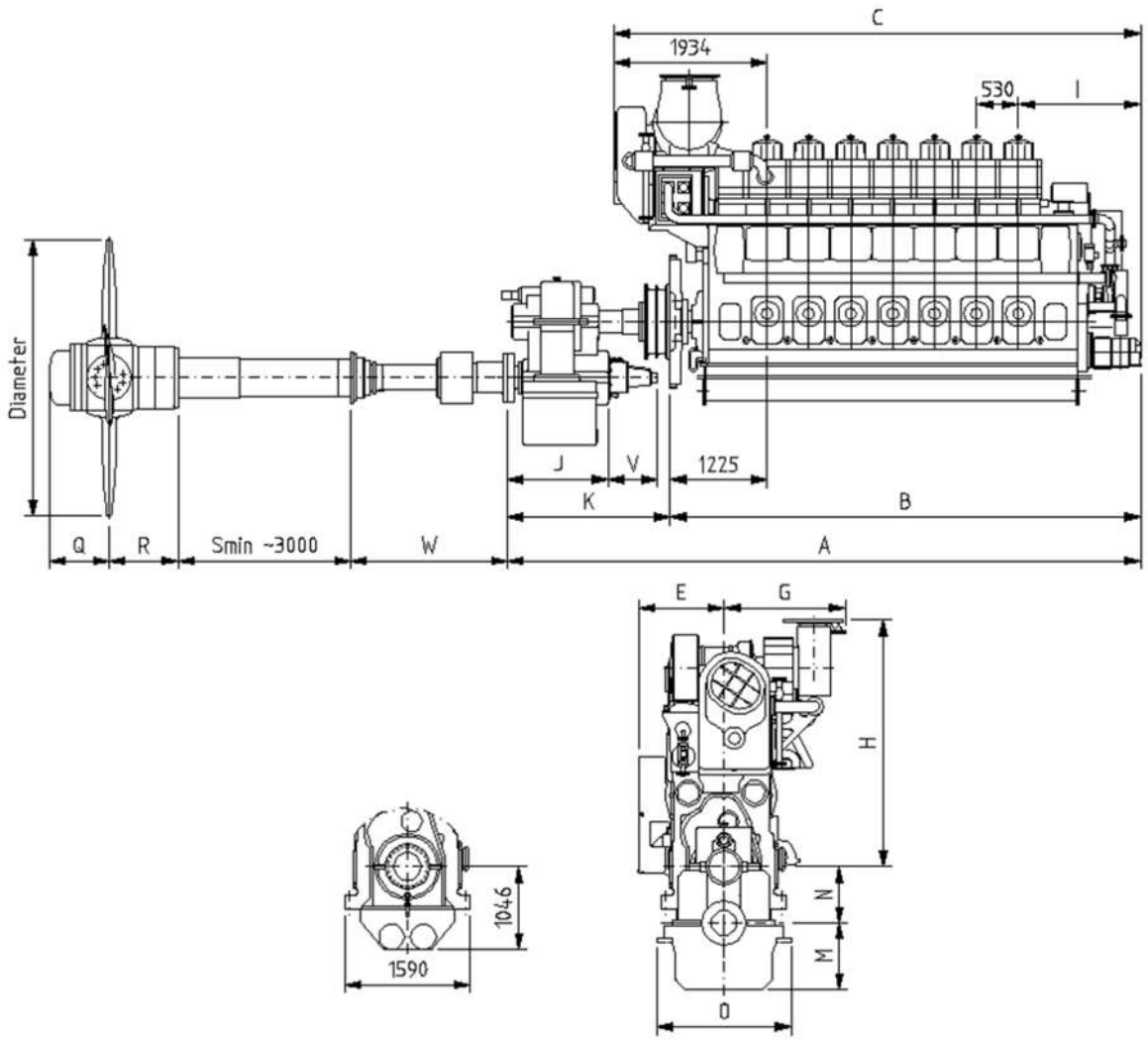

Figure 181: Package – L engine

No. of cylinders, config.	Engine power [kW]	Prop. speed [r/min]	Prop. diameter [mm]	Hub VBS [mm]	Q [mm]	R [mm]	W_{min} [mm]	Prop. mass[1)] [t]
6L	3,000	205	3,300	790	639	692	1,400	8.8
		171	3,700	860	653	745	1,400	9.9
		137	4,200	940	714	886	1,520	12.0
7L	3,500	199	3,450	860	653	745	1,400	9.8
		168	3,850	940	714	886	1,520	11.8
		134	4,400	1,020	775	896	1,520	13.9
8L	4,000	198	3,550	860	653	745	1,400	10.3
		165	4,000	940	714	906	1,520	12.5
		133	4,550	1,100	836	1,001	1,560	16.3

2025-06-16 - 1.0

No. of cylinders, config.	Engine power [kW]	Prop. speed [r/min]	Prop. diameter [mm]	Hub VBS [mm]	Q [mm]	R [mm]	W_{min} [mm]	Prop. mass[1)] [t]
9L	4,500	195	3,650	940	714	906	1,520	12.2
		164	4,100	1,020	775	896	1,520	14.1
		134	4,650	1,100	836	1,006	1,560	17.1

The propeller diameter is optimised at 90 % MCR and 14 kn.

[1)] S_{min} and propeller mass are based on 6,000 mm propeller shaft and 3,000 mm stern tube.

Table 187: MAN standard propulsion package examples – L engine

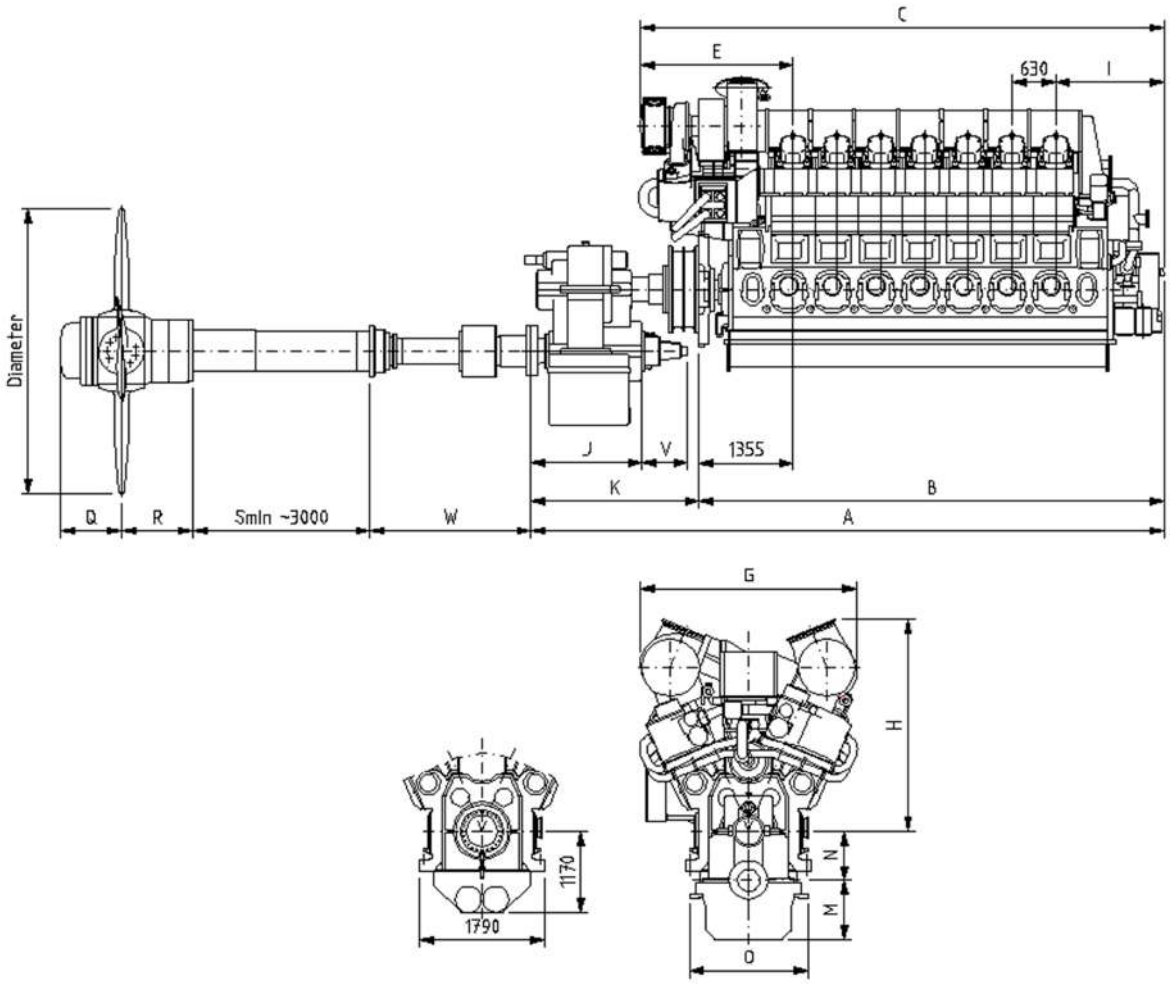

Figure 182: Package – V engine

No. of cylinders, config.	Engine power [kW]	Prop. speed [r/min]	Prop. diameter [mm]	Hub VBS [mm]	Q [mm]	R [mm]	W_{min} [mm]	Prop. mass[1)] [t]
12V	6,000	187	3,950	1,020	775	896	1,560	15.2
		159	4,400	1,100	836	970	1,630	18.3
		128	5,050	1,180	914	989	1,700	22.6
14V	7,000	183	4,100	1,020	775	901	1,630	17.1

2025-06-16 - 1.0

No. of cylinders, config.	Engine power [kW]	Prop. speed [r/min]	Prop. diameter [mm]	Hub VBS [mm]	Q [mm]	R [mm]	W_{min} [mm]	Prop. mass[1)] [t]
		158	4,550	1,100	836	970	1,650	19.8
		127	5,250	1,260	975	1,036	1,700	26.1
16V	8,000	183	4,200	1,100	836	970	1,650	19.3
		155	4,700	1,180	914	989	1,700	23.6
		126	5,400	1,260	975	1,036	1,700	27.8
18V	9,000	181	4,300	1,100	836	995	1,700	21.0
		153	4,850	1,260	975	1,036	1,700	26.2
		123	5,600	1,350	1,037	1,096	1,740	31.6

The propeller diameter is optimised at 90 % MCR and 14 kn.

[1)] S_{min} and propeller mass are based on 6,000 mm propeller shaft and 3,000 mm stern tube.

Table 188: MAN standard propulsion package examples – V engine

7.3 Propeller layout data

To find out which of our propeller fits you, fill in the propeller layout data sheet which you find here https://www.man-es.com/documentation-/project-guide-supplements and send it via e-mail to our sales department. The e-mail address is located under contacts on the web page.

7.4 Propeller clearance

To reduce the emitted pressure impulses and vibrations from the propeller to the hull, MAN Energy Solutions recommends a minimum tip clearance see section Recommended configuration of foundation, Page 208.

For ships with slender aft body and favourable inflow conditions the lower values can be used whereas full after body and large variations in wake field causes the upper values to be used.

In twin-screw ships the blade tip may protrude below the base line.

2025-06-16 - 1.0

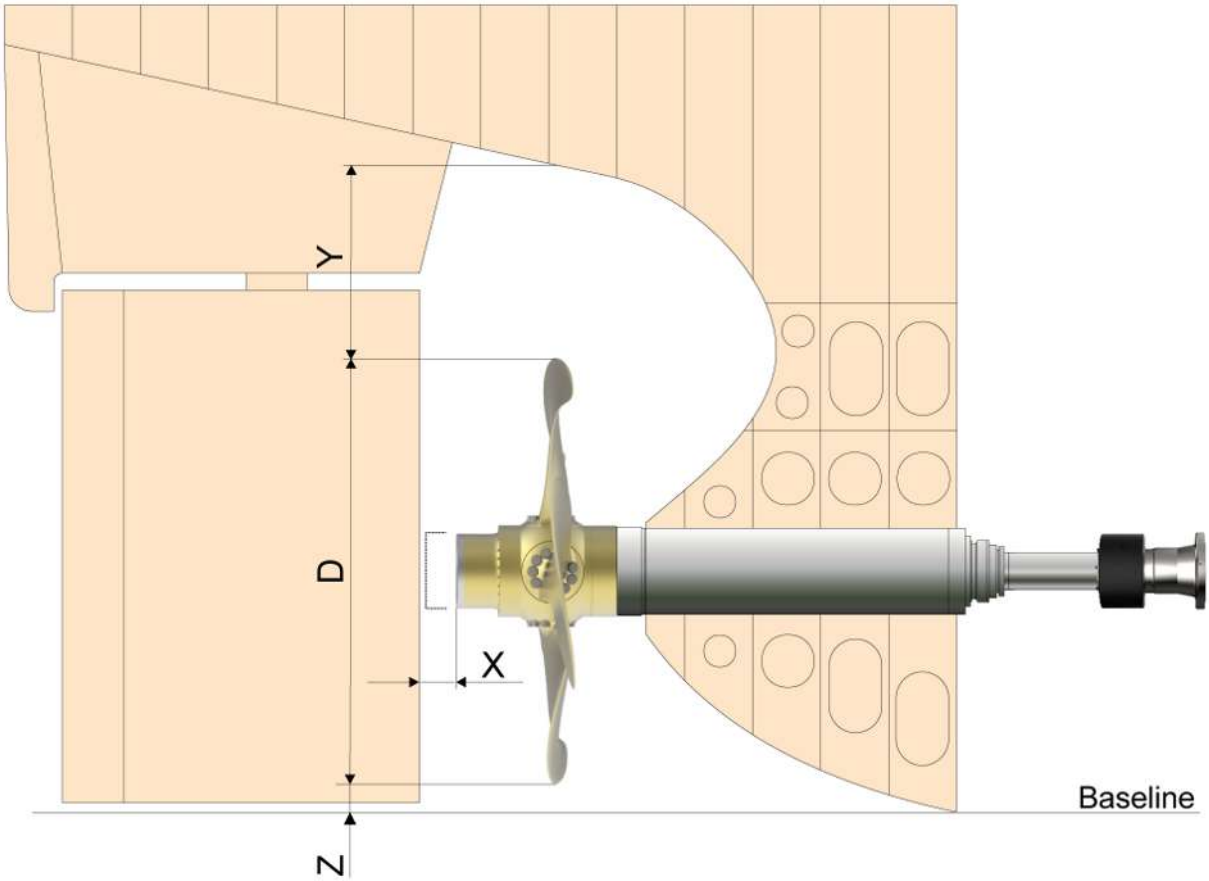

Figure 183: Recommended tip clearance

Hub	Dismantling of hub cylinder	High skew propeller	Non-skew propeller	Baseline clearance
	X min.	Y	Y	Z
Type	[mm]	[mm]	[mm]	[mm]
VBS660	115	15 – 20 % of D	20 – 25 % of D	Minimum 50 – 100
VBS720	120			
VBS790	125			
VBS860	130			
VBS940	140			
VBS1020	150			
VBS1100	160			
VBS1180	170			
VBS1260	175			
VBS1350	190			
VBS1450	200			
VBS1550	215			
VBS1640	230			
VBS1730	395 [1)]			

2025-06-16 - 1.0

Hub	Dismantling of hub cylinder	High skew propeller	Non-skew propeller	Baseline clearance
	X min.	Y	Y	Z
Type	[mm]	[mm]	[mm]	[mm]
VBS1810	405			
[1] Dimension is not finally fixed.				

7.5 Alphatronic 3000 propulsion control system

Alphatronic 3000 is MAN Energy Solutions´ propulsion control system for marine engines and propulsion system solutions. The following brief description is for controlling controllable pitch propeller (CPP) propulsion systems powered by four-stroke medium-speed engines with a standardised interface to the SaCoSone control and safety system.

Alphatronic 3000 provides:

- Safe control of the propulsion plant and reliable maneuvering of the ship.
- Economic operation thanks to optimised engine/propeller load control.
- Quick system response and efficient CPP maneuverability.
- User-friendly operator functions due to logic and ergonomic design of control panels, handles and displays.

The system offers three levels of propulsion control:

- Normal control with automatic load control.
- Backup control from bridge and engine control room.
- Independent telegraph system for communication from bridge to machinery space.

The Alphatronic 3000 system is based on a modular panel design concept to elegantly fit any ship console layout. Configurable touch screens in the propulsion control panels meet a wide range of customer specific functions.

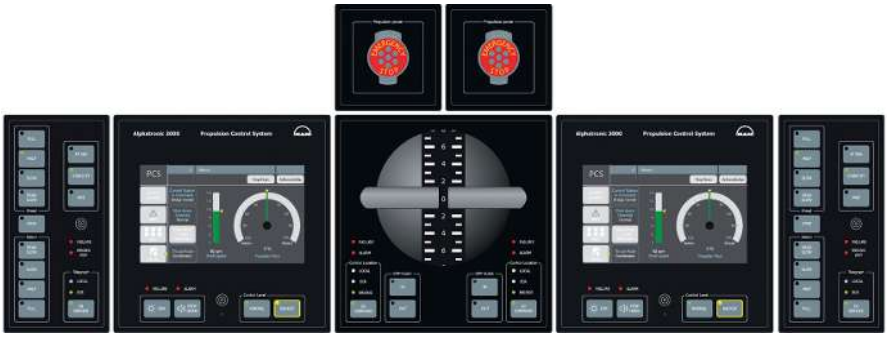

Figure 184: Control station layout for a twin CP propeller plant

A number of tailored features and functions can be provided by Alphatronic 3000 – as for example the speed pilot. The optional speed pilot feature is available with connection to the ship‘s GPS system for ‘speed over ground’ (SOG) input. The speed pilot optimises the voyage planning and operational speeds e.g. for pulling, steaming and convoy sailing – with fuel saving potentials of up to 4 %.

For a more extensive description of the Alphatronic 3000 propulsion control system, functions, system architecture, interfaces, panels and displays, be referred to our 40-page product information "Alphatronic 3000" on this site:

2025-06-16 - 1.0

https://marine.man-es.com/propeller-aft-ship/product-range/man-alpha-controlable-pitch-propeller---cpp

Figure 185: Manoeuvre handle panels

2025-06-16 - 1.0

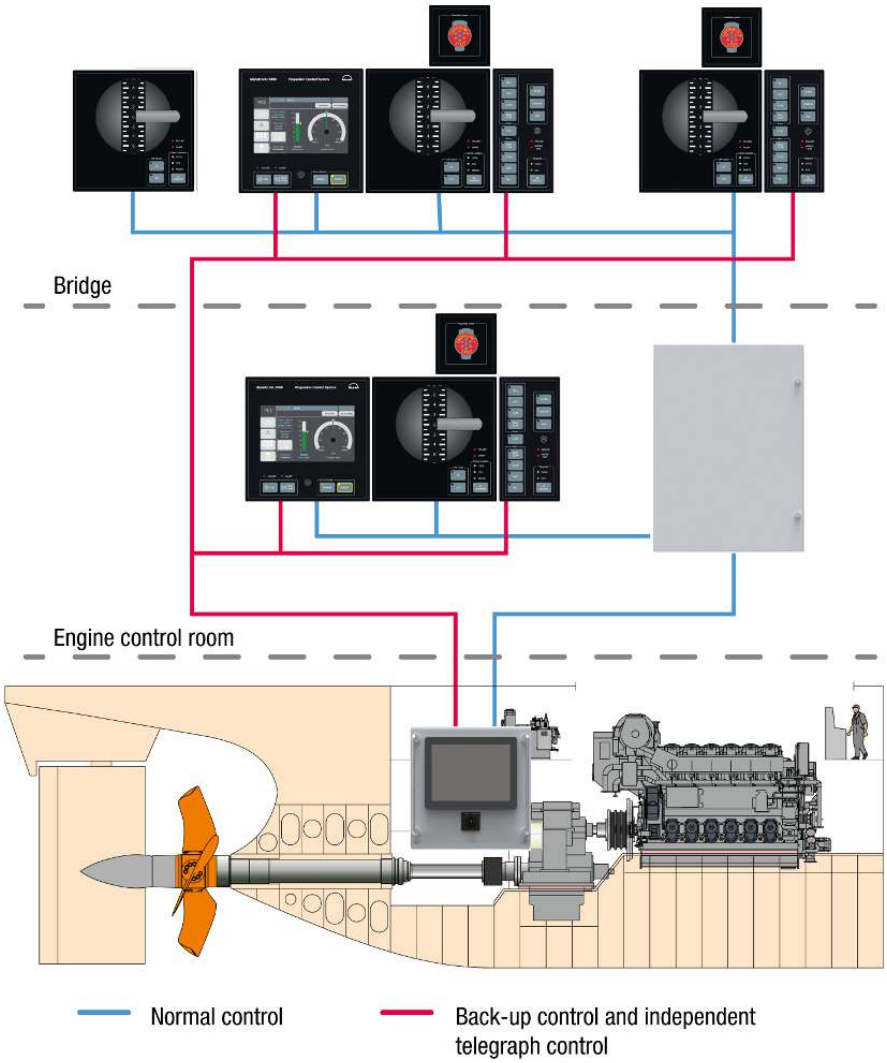

Figure 186: Simple control system architecture – Single CP propeller four-stroke propulsion example

2025-06-16 - 1.0

8 Electric propulsion plants

8.1 Advantages of electric propulsion

Due to different and individual types, purposes and operational profiles of electric propulsion driven vessels the design of an electric propulsion plant differs a lot and has to be evaluated case by case. All the following is for information purpose only and without obligation.

In general the advantages of electric propulsion can be summarized as follows:

- Lower fuel consumption and emissions due to the possibility to optimise the loading of diesel engines/GenSets. The GenSets in operation can run on high loads with high efficiency. This applies especially to vessels which have a large variation in power demand, for example for an offshore supply vessel.
- High reliability, due to multiple engine redundancy. Even if an engine/GenSet malfunctions, there will be sufficient power to operate the vessel safely. Reduced vulnerability to single point of failure providing the basis to fulfill high redundancy requirements.
- Reduced life cycle cost, resulting from lower operational and maintenance costs.
- Improved manoeuvrability and station-keeping ability, by deploying special propulsors such as azimuth thrusters or pods. Precise control of the electric propulsion motors controlled by frequency converters.
- Increased payload, as electric propulsion plants take less engine room space.
- More flexibility in location of diesel engine/GenSets and propulsors. The propulsors are supplied with electric power through cables. They do not need to be adjacent to the diesel engines/GenSets.
- Low propulsion noise and reduced vibrations. For example, a slow speed E-motor allows to avoid a gearbox and propulsors like pods keep most of the structure bore noise outside of the hull.
- Efficient performance and high motor torques, as the system can provide maximum torque also at slow propeller speeds, which gives advantages for example in icy conditions.

8.2 Losses in electric propulsion plants

An electric propulsion plant consists of standard electrical components. The following losses are typical:

2025-06-16 - 1.0

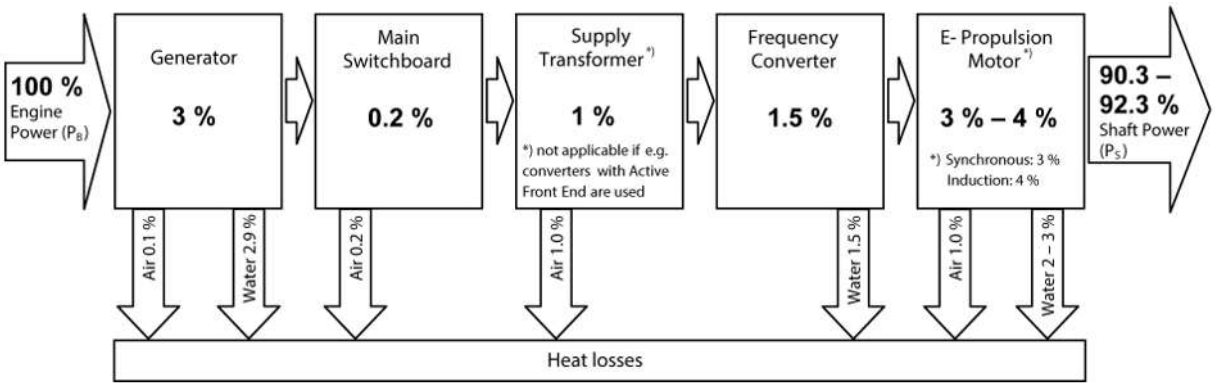

Figure 187: Typical losses of electric propulsion plants

8.3 Components of an electric propulsion plant

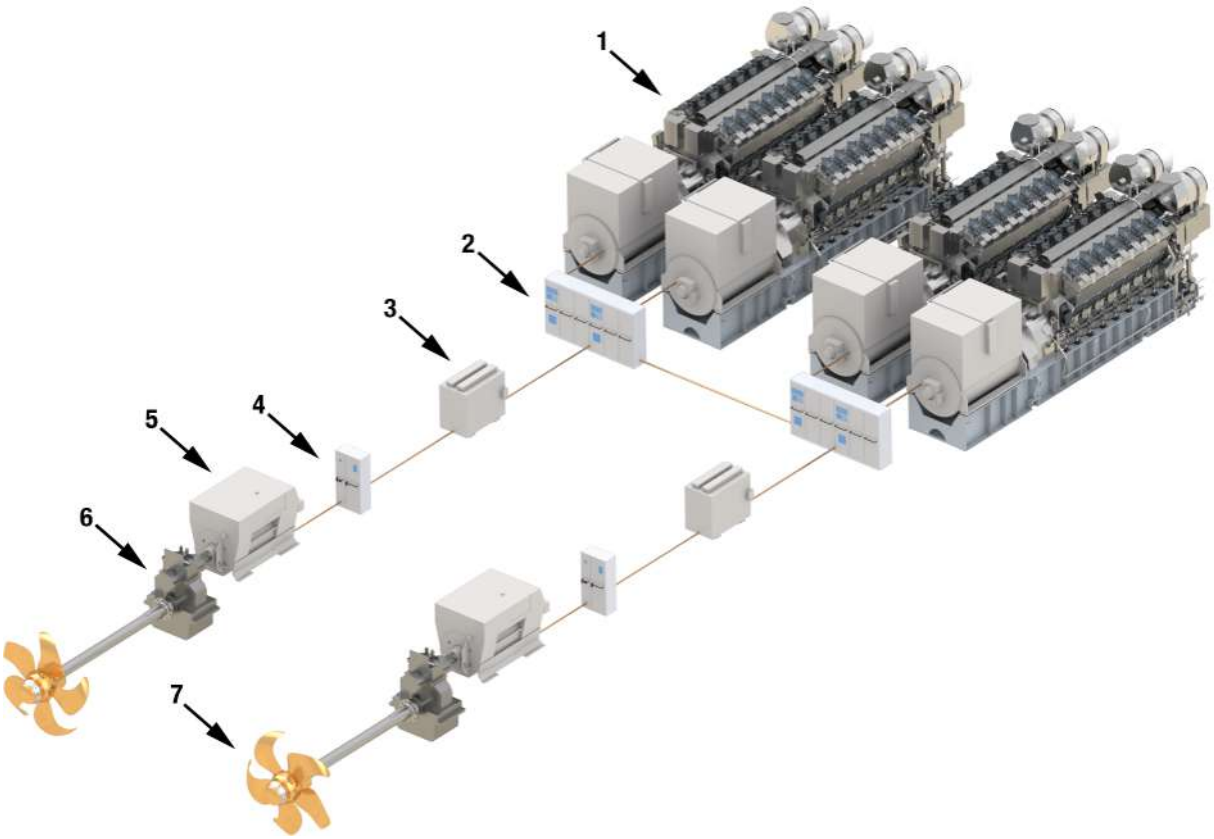

1 GenSets: Diesel engines and alternators
2 Main switchboards
3 Supply transformers: Dependent on the type of the converter. Not required in case of the use of frequency converters with six pulses, an active front end or a sinusoidal drive.
4 Frequency converters
5 Electric propulsion motors
6 Gearboxes (optional): Dependent on the speed of the E-propulsion motor
7 Propellers/propulsion

Figure 188: Example: Electric propulsion plant

2025-06-16 - 1.0

8.4 Electric propulsion plant design

Generic workflow how to design an electric propulsion plant:

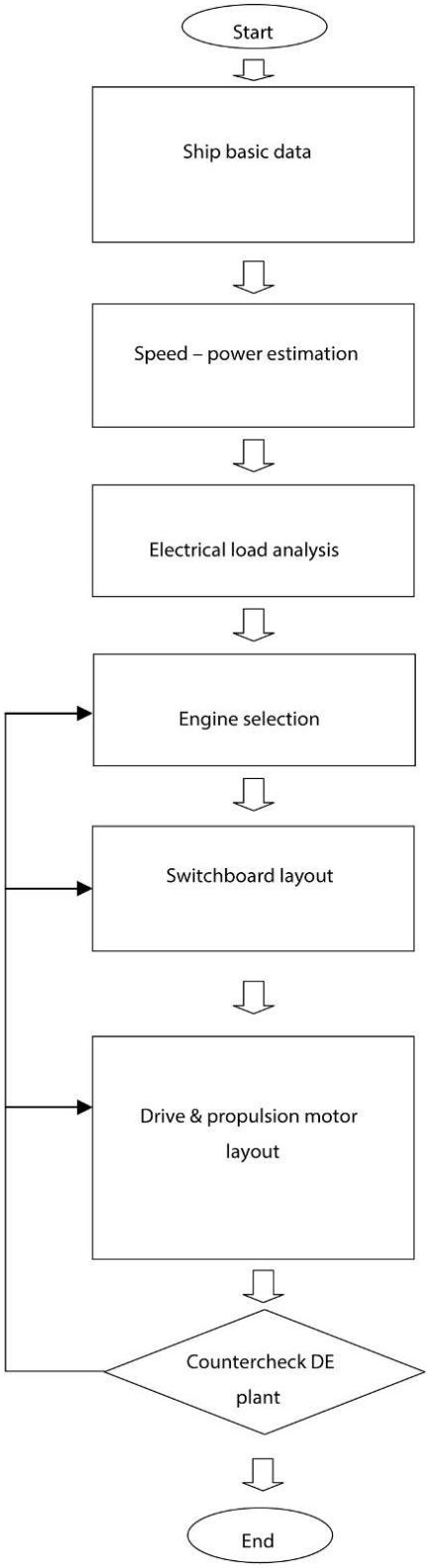

- Type of vessel
- Propulsion type: Shaft line, thruster, pod, …
- Propeller type: FPP, CPP
- Operational profile
- Class notation: Propulsion redundancy, ice class, …

- Ship design points
- Propulsion power: At sea, maneuvering, at port, …
- Sea margin

- Electrical power: At sea, maneuvering, at port, …
- Efficiency of DE plant: Typically = 91 %
- Efficiency of alternators: Typically = 96 % – 97 %

- Number and type of engines/gensets: Installed power
- Max. allowed loading of engines: % of MCR
- Maintenance of engines: At sea operation, at port, …

- Frequency choice: 50/60 Hz
- Voltage choice: Low voltage, medium voltage
- Number of switchboard sections
- Alternator parameters: cos φ, xd″

- Selection of converter type: PWM, LCI, AFE, Sinusoidal, …
- Selection of pulse number: 6p, 12p, 24p
- Selection of supply transformer: Investigate transformer less configuration (e.g. ″Active Front End″)
- Selection of E-propulsion motor type and no. of windings
- THD mitigation method

- Check I_{sc}: ″Increase voltage, optimize xd″, …
- Check availability of reactive power: Change number/type of alternators, cos φ, …
- Check THD limits: Increase pulse number, add filters, …

2025-06-16 - 1.0

The requirements of a project will be considered in an application specific design, taking into account the technical and economical feasibility and later operation of the vessel. In order to provide you with appropriate data, fill the form "Diesel-electric propulsion plants: Questionnaire" you find here https://www.man-es.com/documentation-/project-guide-supplements and return it to your sales representative.

8.5 Engine selection

The engines for an electric propulsion plant have to be selected accordingly to the power demand at all the design points. For a concept evaluation the rating, the capability and the loading of engines can be calculated like this:

Example: Offshore supply vessel (at operation mode with the highest expected total load)

- Total propulsion power demand (at E-motor shaft) 10,000 kW (incl. sea margin)
- Max. electrical consumer load: 1,000 kW

No.	Item	Unit	
1.1	Shaft power on propulsion motors Electrical transmission efficiency	P_S [kW]	10,000 0.91
1.2	Engine brake power for propulsion	P_{B1} [kW]	10,989
2.1	Electric power for ship (E-load) Alternator efficiency	[kW]	1,000 0.965
2.2	Engine brake power for electric consumers	P_{B2} [kW]	1,036
2.3	Total engine brake power demand (= 1.2 + 2.2)	P_B [kW]	12,025
3.1	Diesel engine selection	Type	MAN 6L32/44CR
3.2	Rated power (MCR) running on MDO	[kW]	3,600
3.3	Number of engines	-	4
3.4	Total engine brake power installed	P_B [kW]	14,400
4.1	Loading of engines (= 2.3/3.4)	% of MCR	83.5
5.1	Check: Maximum permissible loading of engines	% of MCR	90.0

Table 189: Selection of the engines for an electric propulsion plant

For the detailed selection of the type and number of engines furthermore the operational profile of the vessel, the maintenance strategy of the engines and the boundary conditions given by the general arrangement have to be considered. For the optimal cylinder configuration of the engines often the power conditions in port are decisive.

2025-06-16 - 1.0

8.6 E-plant, switchboard and alternator design

The configuration and layout of an electric propulsion plant, the main switchboard and the alternators follows some basic design principles. For a concept evaluation the following items should be considered:

- A main switchboard which is divided in symmetrical sections is very reliable and redundancy requirements are easy to be met.
- An even number of GenSets/alternators ensures the symmetrical loading of the bus bar sections.
- Electric consumers should be arranged symmetrically on the bus bar sections.
- The switchboard design is mainly determined by the level of the short circuit currents which have to be withstand and by the breaking capacity of the circuit breakers (CB).
- The voltage choice for the main switchboard depends on several factors. On board of a vessel it is usually handier to use low voltage. Due to short circuit restrictions the following table can be used for voltage choice as a rule of thumb:

Total installed alternator power	Voltage	Breaking capacity of CB
< 10 – 12 MW (and: Single propulsion motor < 3.5 MW)	440 V	100 kA
< 13 – 15 MW (and: Single propulsion motor < 4.5 MW)	690 V	100 kA
< 48 MW	6,600 V	30 kA
< 130 MW	11,000 V	50 kA

Table 190: Rule of thumb for the voltage choice

- The design of the alternators and the electric plant always has to be balanced between voltage choice, availability of reactive power, short circuit level and permissible total harmonic distortion (THD).
- On the one hand side a small xd” of an alternator increases the short circuit current I_{sc}”, which also increases the forces the switchboard has to withstand (F ~ I_{sc}” ^ 2). This may lead to the need of a higher voltage. On the other side a small xd” gives a lower THD but a higher weight and a bigger size of the alternator. As a rule of thumb a xd”=16 % is a good figure for low voltage alternators and a xd”=14 % is good for medium voltage alternators.
- For a rough estimation of the short circuit currents the following formulas can be used:

	Short circuit level [kA] (rough)	Legend
Alternators	$n * P_r / (\sqrt{3} * U_r * xd'' * \cos \varphi_{Grid})$	n: No. of alternators connected P_r: Rated power of alternator [kWe] U_r: Rated voltage [V] xd”: Subtransient reactance [%] cos φ: Power factor of the vessel´s network (typically = 0.9)

2025-06-16 - 1.0

	Short circuit level [kA] (rough)	Legend
Motors	$n * 6 * P_r / (\sqrt{3} * U_r * xd'' * \cos \varphi_{Motor})$	n: No. of motors (directly) connected P_r: Rated power of motor [kWe] U_r: Rated voltage [V] xd": Subtransient reactance [%] cos φ: Power factor of the motor (typically = 0.85 – 0.90 for an induction motor)
Converters	Frequency converters do not contribute to the I_{sc}"	-

Table 191: Formulas for a rough estimation of the short circuit currents

- The dimensioning of the cubicles in the main switchboard is usually done accordingly to the rated current for each incoming and outgoing panel. For a concept evaluation the following formulas can be used:

Type of switchboard cubicle	Rated current [kA]	Legend
Alternator incoming	$P_r / (\sqrt{3} * U_r * \cos \varphi_{Grid})$	P_r: Rated power of alternator [kWe] U_r: Rated voltage [V] cos φ: Power factor of the network (typically = 0.9)
Transformer outgoing	$S_r / (\sqrt{3} * U_r)$	S_r: Apparent power of transformer [kVA] U_r: Rated voltage [V]
Motor outgoing (induction motor controlled by a PWM-converter)	$P_r / (\sqrt{3} * U_r * \cos \varphi_{Converter} * \eta_{Motor} * \eta_{Converter})$	P_r: Rated power of motor [kWe] U_r: Rated voltage [V] cos φ: Power factor converter (typically = 0.95) η_{Motor}: Typically = 0.96 $\eta_{Converterr}$: Typically = 0.97
Motor outgoing (induction motor started: DoL, Y/Δ, soft-starter)	$P_r / (\sqrt{3} * U_r * \cos \varphi_{Motor} * \eta_{Motor})$	P_r: Rated power of motor [kWe] U_r: Rated voltage [V] cos φ: Power factor motor (typically = 0.85 – 0.90) η_{Motor}: Typically = 0.96

Table 192: Formulas to calculate the rated currents of switchboard panel

- The choice of the type of the E-motor depends on the application. Usually induction motors are used up to a power of 7 MW (η_{Motor}: Typically = 0.96). If it comes to applications above 7 MW per E-motor often synchronous machines are used. Also in applications with slow speed E-motors (without a reduction gearbox), for ice going or pod-driven vessels often synchronous E-motors (η_{Motor}: Typically = 0.97) are used.
- In plants with frequency converters based on VSI-technology (PWM type) the converter itself can deliver reactive power to the E-motor. So often a power factor cos φ = 0.9 is a good figure to design the alternator rating.

2025-06-16 - 1.0

Nevertheless there has to be sufficient reactive power for the ship consumers, so that a lack in reactive power does not lead to unnecessary starts of (stand-by) alternators.

- The harmonics can be improved (if necessary) by using supply transformers for the frequency converters with a 30 ° phase shift between the two secondary windings, which cancel the dominant 5th and 7th harmonic currents. Also an increase in the pulse number leads to lower THD. Using a 12-pulse configuration with a PWM type of converter the resulting harmonic distortion will normally be below the limits defined by the classification societies. When using a transformer less solution with a converter with an Active Front End (Sinusoidal input rectifier) or in a 6-pulse configuration usually THD-filters are necessary to mitigate the THD on the sub-distributions.

The final layout of the electrical plant and the components has always to be based on a detailed analysis and a calculation of the short circuit levels, the load flows and the THD levels as well as on an economical evaluation.

8.7 Over-torque capability

In electric propulsion plants, which are operating with a fix pitch propeller, the dimensioning of the electric propulsion motor has to be done accurately, in order to have sufficient propulsion power available. For dimensioning the electric motor it has to be investigated what amount of over-torque, which directly defines the motor´s cost, weight and space demand, is required to operate the propeller with sufficient power also in situations, where additional power is required (for example because of heavy weather or icy conditions).

Usually a constant power range of 5 % – 10 % is applied on the propulsion (Field weakening range), where constant E-motor power is available.

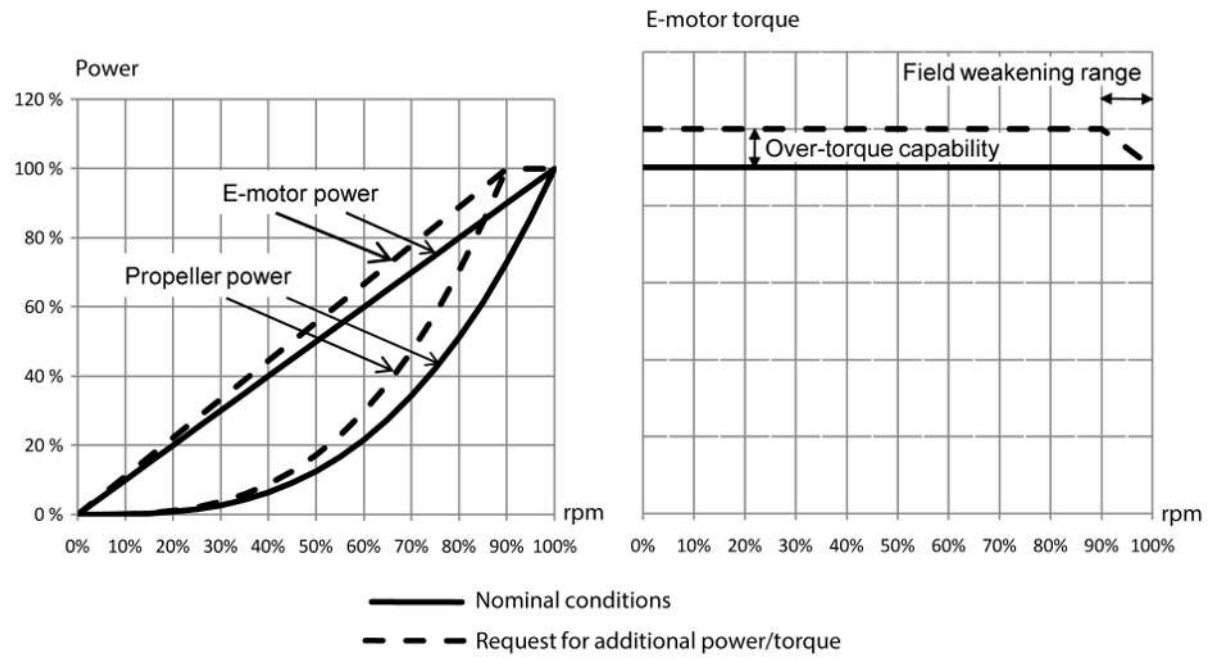

Figure 189: Example: Over-torque capability of an E-propulsion train for a FPP-driven vessel

8.8 Power management

Power management system

The following main functions are typical for a power management system (PMS):

- Automatic load dependent start/stop of GenSets/alternators
- Manual starting/stopping of GenSets/alternators
- Fault dependent start/stop of stand-by GenSets/alternators in cases of under-frequency and/or under-voltage
- Start of GenSets/alternators in case of a blackout (black-start capability)
- Determining and selection of the starting/stopping sequence of GenSets/alternators
- Start and supervise the automatic synchronization of alternators and bus tie breakers
- Balanced and unbalanced load application and sharing between GenSets/alternators. Often an emergency programme for quickest possible load acceptance is necessary
- Regulation of the network frequency (with static droop or constant frequency)
- Distribution of active load between alternators
- Distribution of reactive load between alternators
- Handling and blocking of heavy consumers
- Automatic load shedding
- Tripping of non-essential consumers
- Bus tie and breaker monitoring and control

All questions regarding the interfaces from/to the power management system have to be clarified with MAN Energy Solutions at an early project stage.

2025-06-16 - 1.0

8.9 Example configurations of electric propulsion plants

Offshore Support Vessels

The term “Offshore Service & Supply Vessel” includes a large class of vessel types, such as platform supply vessels (PSV), anchor handling/tug/supply (AHTS), offshore construction vessel (OCV), diving support vessel (DSV), multipurpose vessel (MPV), etc.

Electric propulsion is the norm in ships which frequently require dynamic positioning and station keeping capability. Initially these vessels mainly used variable speed motor drives and fixed pitch propellers. Now they mostly deploy variable speed thrusters and they are also often equipped with hybrid propulsion systems.

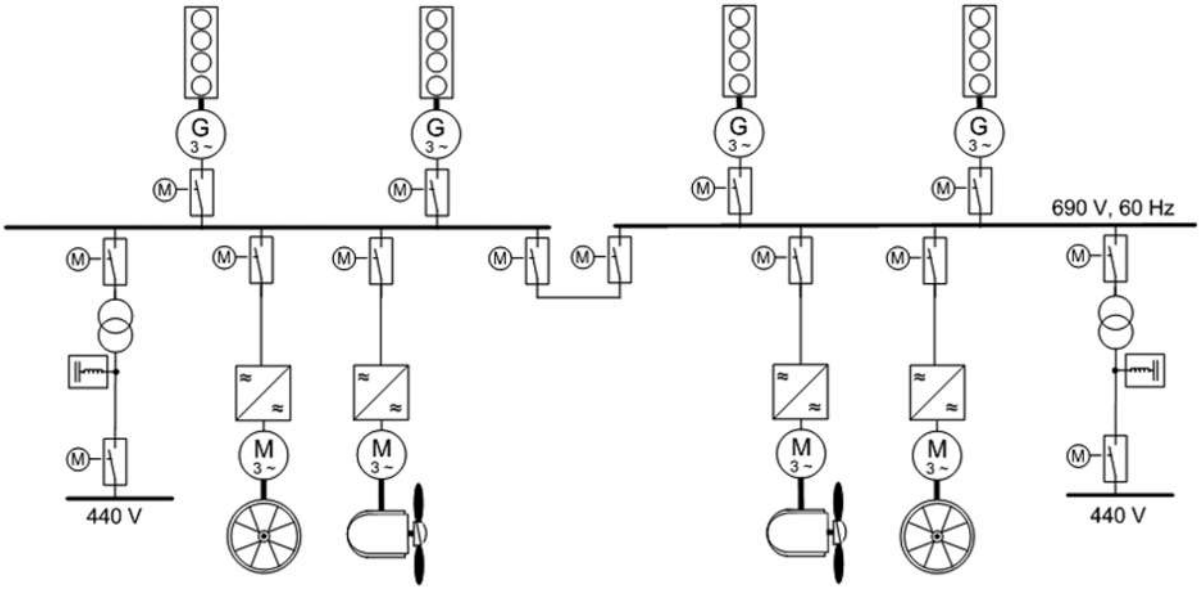

Figure 190: Example: Electric propulsion configuration of a PSV

In offshore applications often frequency converters with a 6-pulse configuration or with an active front end are used, which give specific benefits in the space consumption of the electric plant, as it is possible to get rid of the heavy and bulky supply transformers.

Type of converter/drive	Supply transformer	Type of E-motor	Pros & cons
6 pulse drive or active front end	-	Induction	+ Transformer less solution + Less space and weight – THD filters to be considered

Table 193: Main DE-components for offshore applications

LNG Carriers

A propulsion configuration with two E-motors (e.g. 600 rpm or 720 rpm) and a reduction gearbox (twin-in-single-out) is a typical configuration, which is used at LNG carriers where the installed alternator power is in the range of about

2025-06-16 - 1.0

40 MW. The electric plant fulfils high redundancy requirements. Due to the high propulsion power, which is required and higher efficiencies, mainly synchronous E-motors are used.

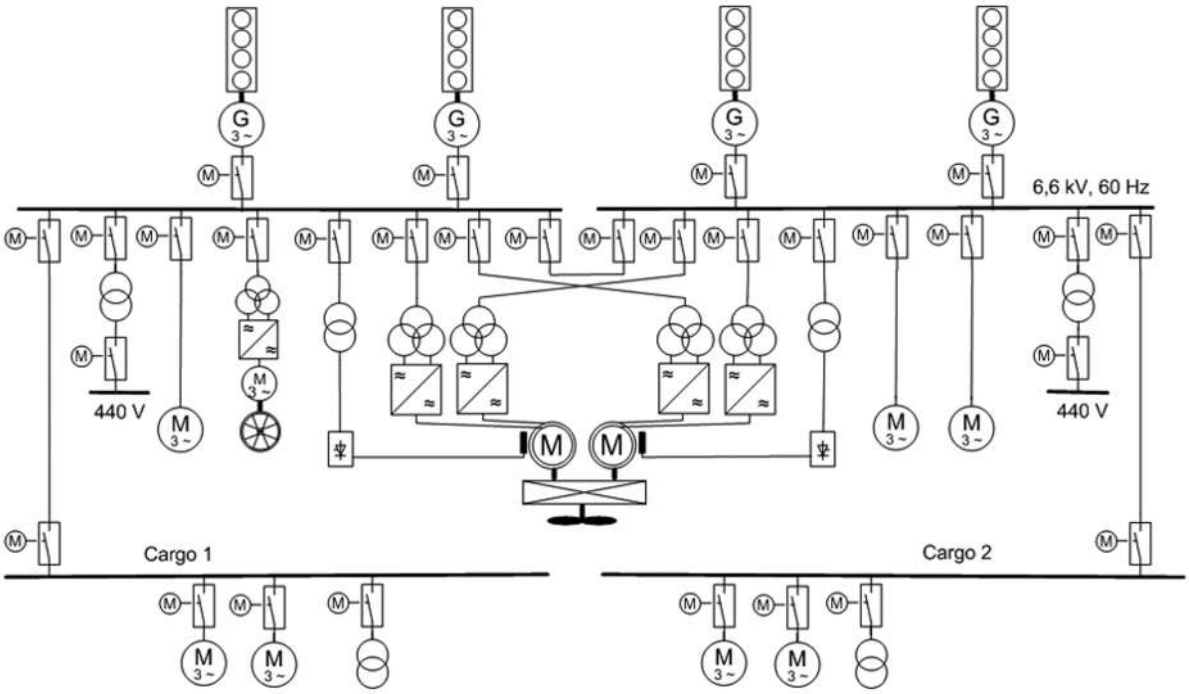

Figure 191: Example: Electric propulsion configuration of a LNG carrier with geared transmission, single screw and fixed pitch propeller

Type of converter/drive	Supply transformer	Type of E-motor	Pros & cons
VSI with PWM	24 pulse	Synchronous	+ High propulsion power + High drive & motor efficiency + Low harmonics – Complex E-plant configuration

Table 194: Main DE-components for a LNG carrier

For ice going carriers and tankers also podded propulsion is a robust solution, which has been applied in several vessels.

Cruise ships and ferries

Passenger vessels – cruise ships and ferries – are an important application field for electric propulsion. Safety and comfort are paramount. New regulations, as “Safe Return to Port”, require a high reliable and redundant electric propulsion plant and also onboard comfort is of high priority, allowing only low levels of noise and vibration from the ship´s machinery.

A typical electric propulsion plant is shown in the example below.

2025-06-16 - 1.0

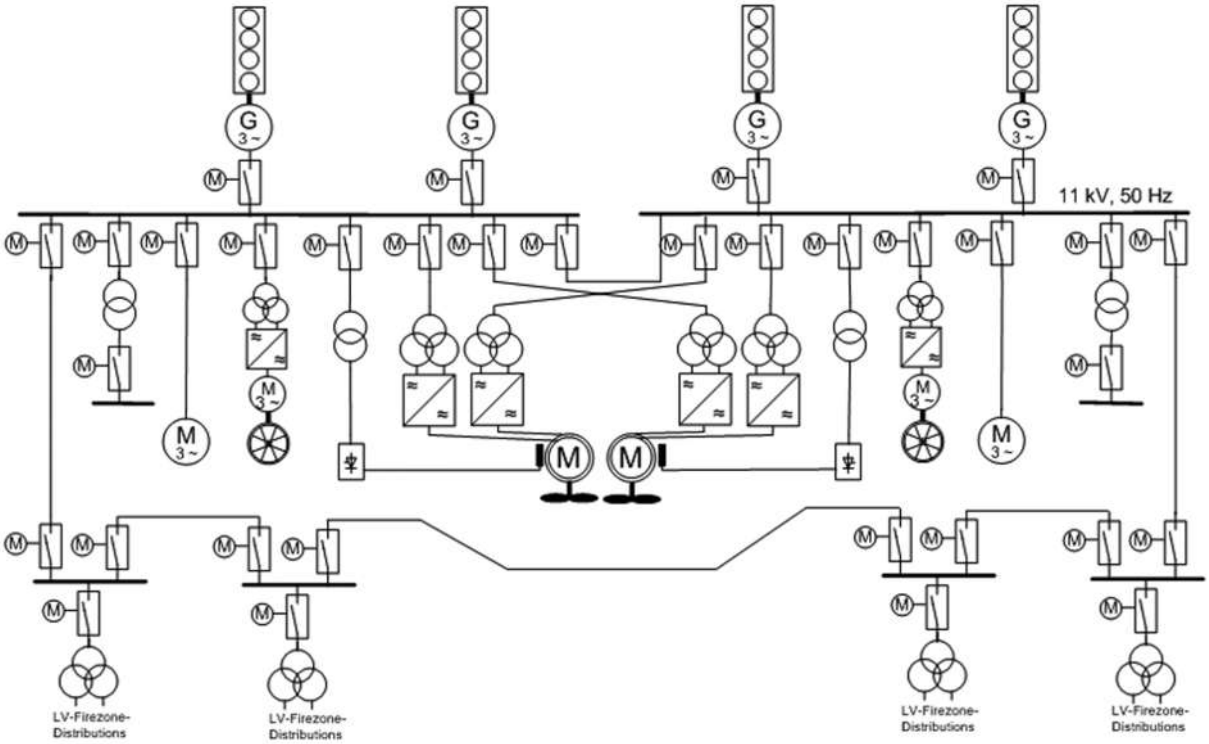

Figure 192: Example: Electric propulsion configuration of a cruise liner, twin screw, gear less

Type of converter/drive	Supply transformer	Type of E-motor	Pros & cons
VSI with PWM	24 pulse	Synchronous (e.g. slow speed 150 rpm)	+ Highly redundant & reliable + High drive & motor efficiency + Low noise & vibration – Complex E-plant configuration

Table 195: Main DE-components for a cruise liner

For cruise liners often also geared transmission is applied as well as pods.

For a RoPax ferry almost the same requirements are valid as for a cruise liner.

The figure below shows an electric propulsion plant with a “classical” configuration, consisting of E-motors (e.g. 1,200 rpm), geared transmission, frequency converters and supply transformers.

2025-06-16 - 1.0

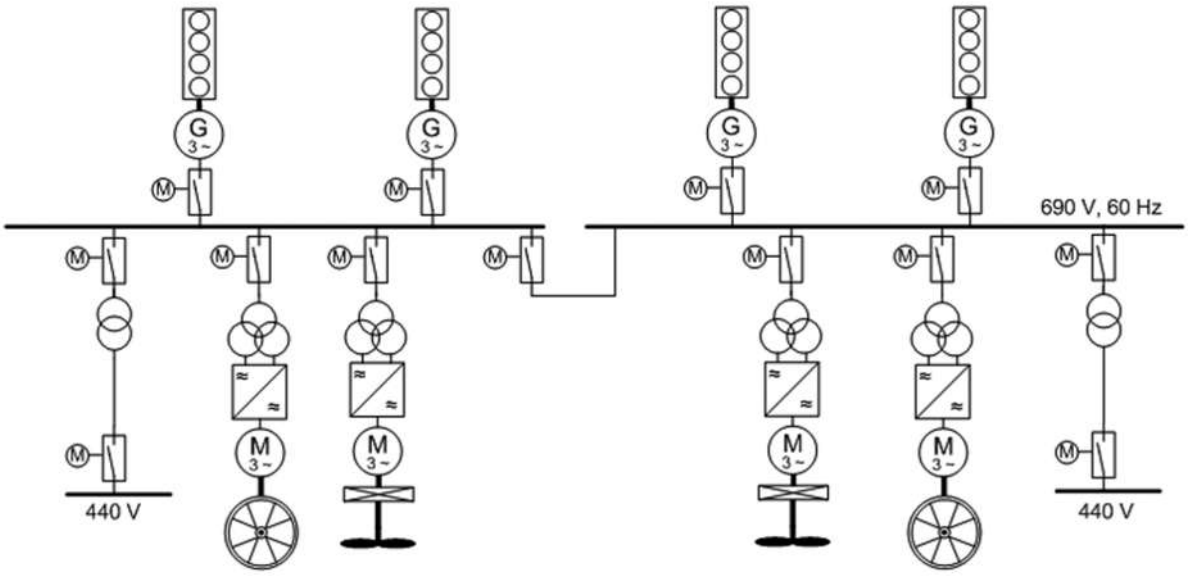

Figure 193: Example: Electric propulsion configuration of a RoPax ferry, twin screw, geared transmission

Type of converter/drive	Supply transformer	Type of E-motor	Pros & cons
VSI-type (with PWM technology)	12 pulse, two secondary windings, 30° phase shift	Induction	+ Robust & reliable technology + No seperate THD filters – More space & weight (compared to transformer less solution)

Table 196: Main DE-components for a RoPax ferry

Low loss applications

As MAN Energy Solutions works together with different suppliers for electric propulsion plants an optimal matched solution can be designed for each application, using the most efficient components from the market. The following example shows a low loss solution, patented by STADT AS (Norway).

In many cases a combination of an E-propulsion motor, running on two constants speeds (medium, high) and a controllable pitch propeller (CPP) gives a high reliable and compact solution.

2025-06-16 - 1.0

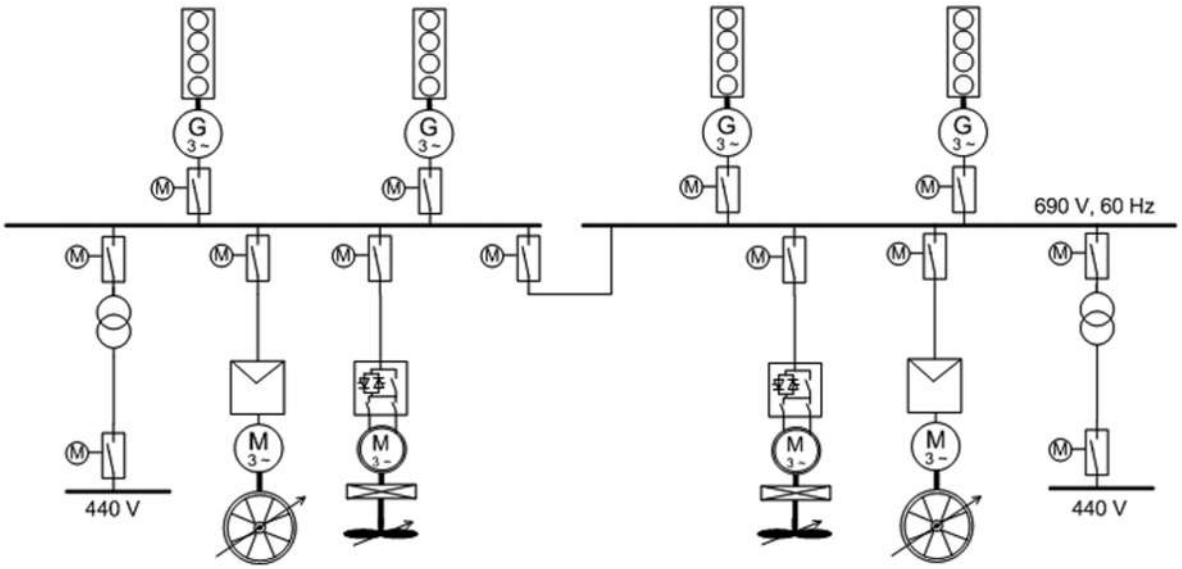

Figure 194: Example: Electric propulsion configuration of a RoRo, twin screw, geared transmission

Type of converter/drive	Supply transformer	Type of E-motor	Pros & cons
Sinusoidal drive (patented by STADT AS)	-	Induction (two speeds)	+ Highly reliable & compact + Very low losses + Transformer less solution + Low THD (no THD filters required) – Only applicable with a CP propeller

Table 197: Main DE-components of a low loss application (patented by STADT AS)

2025-06-16 - 1.0

8.10 High-efficient electric propulsion plants with variable speed GenSets (EPROX-DC)

Recent developments in electric components, which are used in an electric propulsion plant show solutions for a fuel-saving propulsion system. For many years, electric propulsion employs alternating current (AC) for the main switchboards. Since some years also direct current (DC) distributions are applied here. In such a system the advantages of AC components, like alternators and e-propulsion motors are combined with the DC distribution. Just as the variable speed drives enable the e-propulsion motors to run at their optimum working point, the DC distribution allows the diesel engines to operate with variable speed for highest fuel-oil efficiency at each load level. Such a system enables a decoupled operation of diesel engines, propulsion drives and other consumers of electric power, where each power source and consumer can be controlled and optimised independently.

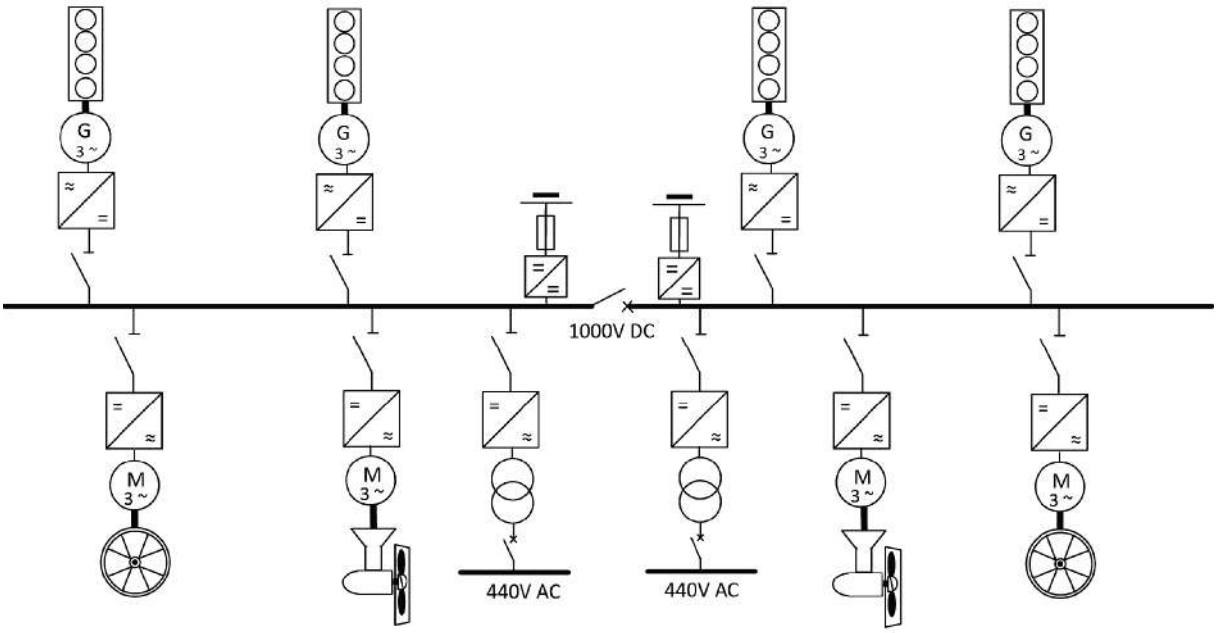

Figure 195: Example: High-efficient electric propulsion plant based on a DC distribution; with integrated batteries for energy storage

As a result constant speed operation for the GenSets is no longer a constraint. When the main GenSets run at constant rpm with control of the power delivered, fuel efficiency is compromised. Utilizing an enlarged engine operation map with a speed range of 60 % to 100 % paves the way to a high potential in fuel oil saving. According to the total system load each engine can operate at an individual speed set point, in order to achieve a minimum in fuel oil consumption.

2025-06-16 - 1.0

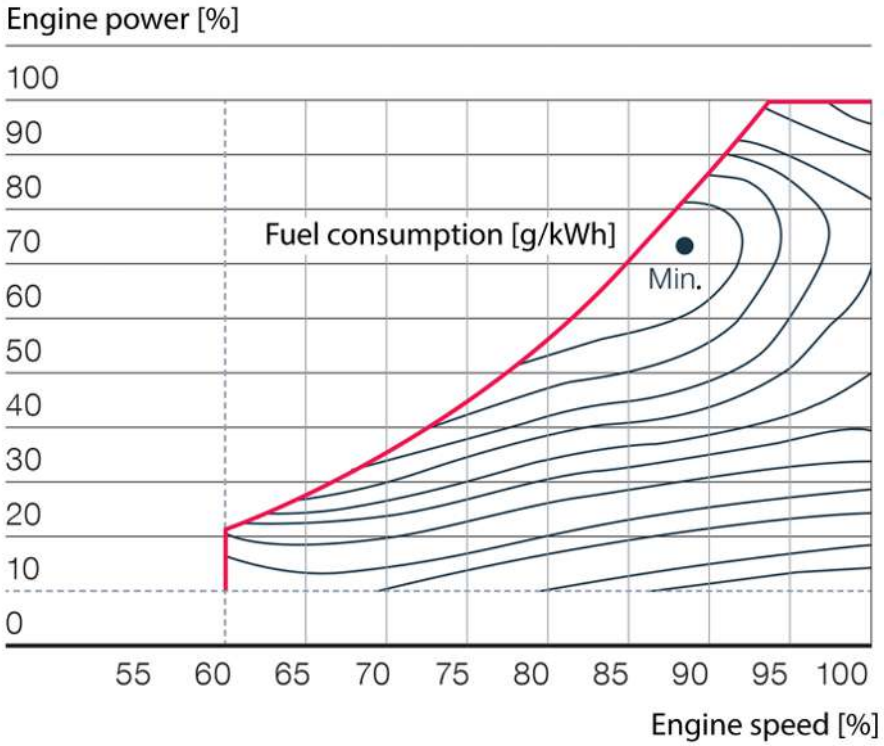

Figure 196: Typical SFOC map for a four stroke medium speed diesel engine (for illustration purpose only)

Another major advantage of the system is the possible integration of energy storage devices, like batteries. They can reduce the transient loads on the engines, improve the dynamic response and the manoeuvrability of the propulsion system and absorb rapid power fluctuations from the vessel´s grid. Fast load applications are removed from the engines and peak loads are shaved.

It is also beneficial to run the engines always on high loads, where the specific fuel oil consumption is lowest. This degree of freedom can be utilized and surplus power can charge the batteries. If less power is required, one engine can be shut down, with the remaining ones running still with a high loading, supported by power out of the batteries.

Energy storage devices – Offering flexibility and performance

It is often beneficial to run GenSets on high loads, sing surplus power to charge batteries. If less energy is required, one GenSet can be shut down, with the remaining GenSets running again at high load, supported by the batteries.

2025-06-16 - 1.0

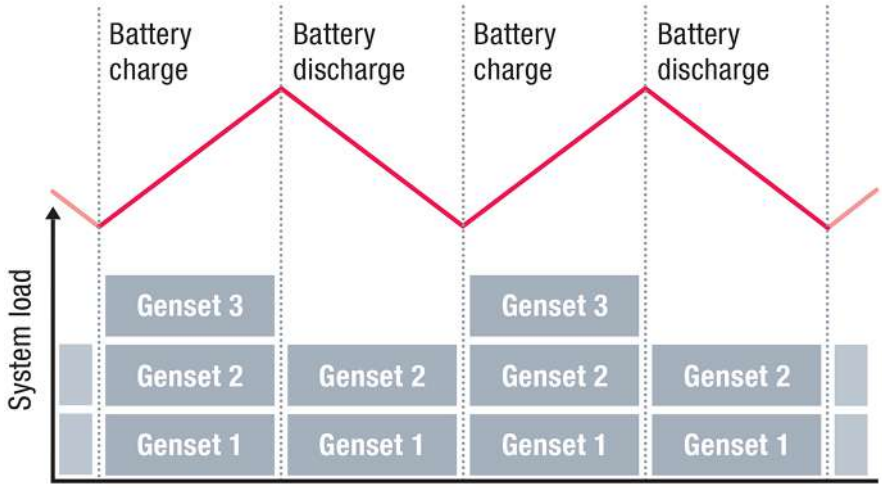

Figure 197: Batteries enable the diesel engines to operate at a high loading respectively with low specific fuel oil consumption

8.11 Fuel-saving hybrid propulsion system (HyProp ECO)

For many applications a hybrid propulsion system is a good choice, especially when flexibility, performance and efficiency are required. With HyProp ECO a system solution has been developed, which combines a diesel engine and an electric machine in a smart manner.

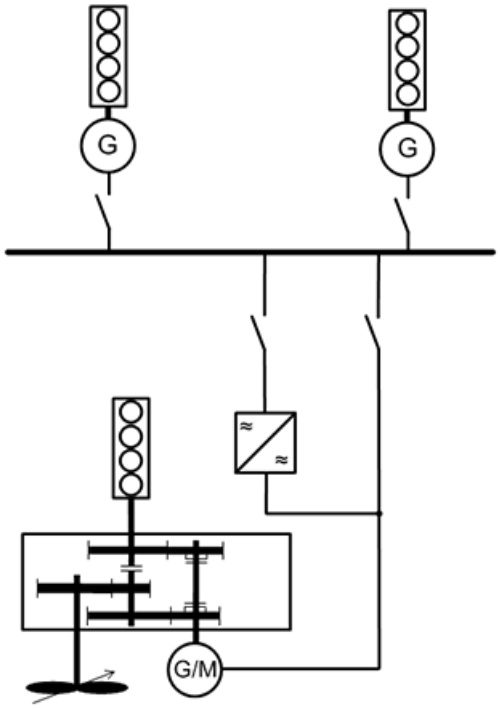

Figure 198: Principal layout of a HyProp ECO propulsion system

Beside the main diesel engine, the auxiliary GenSets, a 2-step reduction gearbox and the CP propeller a reversible electric machine, a frequency converter and a by-pass are the key components of the system. With this many opera-

2025-06-16 - 1.0

tion modes can be achieved. When operating the system via the by-pass the normal PTO and PTI-boosting modes can be applied without any losses in the transmission line to/from the main switchboard. Utilising the frequency converter is done for two different purposes. Either it is used for starting-up the electric machine as emergency propulsion motor (PTH) in case the main engine is off. Usually the 2nd step in the gearbox is then used. Or the converter is of a bi-directional type and the propeller can be operated very efficiently at combinator mode with the PTO running in parallel with the auxiliary GenSets with a constant voltage and frequency towards the main switchboard. In this mode the converter can also be used for electric propulsion as variable speed drive for the propeller.

The major advantage of HyProp ECO is that costly components, like the frequency converter can be designed small. A typical figure for its size is 30 % of the installed alternator/motor power as for almost all modes, where the converter is involved, the required power is much lower compared to a design for pure PTO/PTI purposes. Therefore HyProp ECO combines lowest investment with optimised performance.

2025-06-16 - 1.0

This page is intentionally left blank

2025-06-16 - 1.0

9 Annex

9.1 Safety instructions and necessary safety measures

The following list of basic safety instructions, in combination with further engine documentation like user manual and working instructions, should ensure a safe handling of the engine. Due to variations between specific plants, this list does not claim to be complete and may vary with regard to project-specific requirements.

9.1.1 General

There are risks at the interfaces of the engine, which have to be eliminated or minimised in the context of integrating the engine into the plant system. Responsible for this is the legal person which is responsible for the integration of the engine.

Following prerequisites need to be fulfilled:

- Layout, calculation, design and execution of the plant have to be state of the art.
- All relevant classification rules, regulations and laws are considered, evaluated and are included in the system planning.
- The project-specific requirements of MAN Energy Solutions regarding the engine and its connection to the plant are implemented.
- In principle, the more stringent requirements of a specific document is applied if its relevance is given for the plant.

9.1.2 Safety equipment and measures provided by plant-side

- Proper execution of the work

  Generally, it is necessary to ensure that all work is properly done according to the task trained and qualified personnel.

  All tools and equipment must be provided to ensure adequate accesible and safe execution of works in all life cycles of the plant.

  Special attention must be paid to the execution of the electrical equipment. By selection of suitable specialised companies and personnel, it has to be ensured that a faulty feeding of media, electric voltage and electric currents will be avoided.
- Fire protection

  A fire protection concept for the plant needs to be executed. All from safety considerations resulting necessary measures must be implemented. The specific remaining risks, e.g. the escape of flammable media from leaking connections, must be considered.

  Generally, any ignition sources, such as smoking or open fire in the maintenance and protection area of the engine is prohibited.

  Smoke detection systems and fire alarm systems have to be installed and in operation.
- Electrical safety

  Standards and legislations for electrical safety have to be followed. Suitable measures must be taken to avoid electrical short circuit, lethal electric shocks and plant specific topics as static charging of the piping through the media flow itself.

2025-06-16 - 1.0

- Noise and vibration protection

  The noise emission of the engine must be considered early in the planning and design phase. A soundproofing or noise encapsulation could be necessary. The foundation must be suitable to withstand the engine vibration and torque fluctuations. The engine vibration may also have an impact on installations in the surrounding of the engine, as galleries for maintenance next to the engine. Vibrations act on the human body and may dependent on strength, frequency and duration harm health.

- Thermal hazards

  In workspaces and traffic areas hot surfaces must be isolated or covered, so that the surface temperatures comply with the limits by standards or legislations.

- Composition of the ground

  The ground, workspace, transport/traffic routes and storage areas have to be designed according to the physical and chemical characteristics of the excipients and supplies used in the plant.

  Safe work for maintenance and operational staff must always be possible.

- Adequate lighting

  Light sources for an adequate and sufficient lighting must be provided by plant-side. The current guidelines should be followed (100 Lux is recommended, see also DIN EN 1679-1).

- Working platforms/scaffolds

  For work on the engine working platforms/scaffolds must be provided and further safety precautions must be taken into consideration. Among other things, it must be possible to work secured by safety belts. Corresponding lifting points/devices have to be provided.

- Setting up storage areas

  Throughout the plant, suitable storage areas have to be determined for stabling of components and tools.

  It is important to ensure stability, carrying capacity and accessibility. The quality structure of the ground has to be considered (slip resistance, resistance against residual liquids of the stored components, consideration of the transport and traffic routes).

- Engine room ventilation

  An effective ventilation system has to be provided in the engine room to avoid endangering by contact or by inhalation of fluids, gases, vapours and dusts which could have harmful, toxic, corrosive and/or acid effects.

  The engine room ventilation must ensure a maximum engine room temperature, with following boundary conditions:

  – Maximum air temperature in the area of the engine and its components ≤ 45°C.

  – Maximum air temperature at least 5 K below the flash point of any liquids, that is present within the engine room.

- Venting of crankcase and turbocharger

  With crankcase ventilation the gases/vapours originating from crankcase and turbocharger are not ignitable. For multi-engine plants, each engine has to be ventilated separately. The engine ventilation of different engines must not be connected.

  In case of an installed suction system, it has to be ensured that it will not be stopped until at least 20 minutes after engine shutdown.

- Intake air filtering

2025-06-16 - 1.0

In case air intake is realised through piping and not by means of the turbocharger´s intake silencer, appropriate measures for air filtering must be provided. It must be ensured that particles exceeding 5 µm will be restrained by an air filtration system.

- Quality of the intake air

  It has to be ensured that combustible media will not be sucked in by the engine.

  Intake air quality according to the section Specification of intake air (combustion air), Page 288 has to be guaranteed.

- Emergency stop system

  The emergency stop system requires special care during planning, realisation, commissioning and testing at site to avoid dangerous operating conditions. The assessment of the effects on other system components caused by an emergency stop of the engine must be carried out by plant-side.

- Fail-safe 24 V power supply

  Because engine control, alarm system and safety system are connected to a 24 V power supply this part of the plant has to be designed fail-safe to ensure a regular engine operation.

- Hazards by rotating parts/shafts

  Contact with rotating parts must be excluded by plant-side (e.g. free shaft end, flywheel, coupling).

- Safeguarding of the surrounding area of the flywheel

  The entire area of the flywheel has to be safeguarded by plant-side.

  Special care must be taken, inter alia, to prevent from: Ejection of parts, contact with moving machine parts and falling into the flywheel area.

- Securing of the engine´s turning gear

  The turning gear has to be equipped with an optical and acoustic warning device. When the turning gear is first activated, there has to be a certain delay between the emission of the warning device's signals and the start of the turning gear. The gear wheel of the turning gear has to be covered. The turning gear should be equipped with a remote control, allowing optimal positioning of the operator, overlooking the entire hazard area (a cable of approximately 20 m length is recommended). Unintentional engagement or start of the turning gear must be prevented reliably.

  It has to be prescribed in the form of a working instruction that:

  – The turning gear has to be operated by at least two persons.
  – The work area must be secured against unauthorised entry.
  – Only trained personnel is permissible to operate the turning gear.

- Securing of the starting air pipe

  To secure against unintentional restarting of the engine during maintenance work, a disconnection and depressurisation of the engine´s starting air system must be possible. A lockable starting air stop valve must be provided in the starting air pipe to the engine.

- Securing of the turbocharger rotor

  To secure against unintentional turning of the turbocharger rotor while maintenance work, it must be possible to prevent draught in the exhaust gas duct and, if necessary, to secure the rotor against rotation.

- Consideration of the blow-off zone of the crankcase cover´s relief valves

2025-06-16 - 1.0

During crankcase explosions, the resulting hot gases will be blown out of the crankcase through the relief valves. This must be considered in the overall planning.

- Installation of flexible connections

  For installation of flexible connections follow strictly the information given in the planning and final documentation and the manufacturer manual.

  Flexible connections may be sensitive to corrosive media. For cleaning only adequate cleaning agents must be used (see manufacturer manual). Substances containing chlorine or other halogens are generally not permissible.

  Flexible connections have to be checked regularly and replaced after any damage or lifetime given in manufacturer manual.

- Connection of exhaust port of the turbocharger to the exhaust gas system of the plant

  The connection between the exhaust port of the turbocharger and the exhaust gas system of the plant has to be executed gas tight and must be equipped with a fire proof insulation.

  The surface temperature of the fire insulation must not exceed 220°C.

  In workspaces and traffic areas, a suitable contact protection has to be provided whose surface temperature must not exceed 60°C.

  The connection has to be equipped with compensators for longitudinal expansion and axis displacement in consideration of the occurring vibrations (the flange of the turbocharger reaches temperatures of up to 450°C).

- Media systems

  The stated media system pressures must be complied. It must be possible to close off each plant-side media system from the engine and to depressurise these closed off pipings at the engine. Safety devices in case of system over pressure must be provided.

- Drainable supplies and excipients

  Supply system and excipient system must be drainable and must be secured against unintentional recommissioning (EN 1037). Sufficient ventilation at the filling, emptying and ventilation points must be ensured. The residual quantities which must be emptied have to be collected and disposed of properly.

- Spray guard has to be ensured for liquids possibly leaking from the flanges of the plant´s piping system. The emerging media must be drained off and collected safely.

- Charge air blow-off (if applied)

  The piping must be executed by plant-side and must be suitably isolated. In workspaces and traffic areas, a suitable contact protection has to be provided whose surface temperature must not exceed 60°C.

  The compressed air is blown-off either outside the vessel or into the engine room. In both cases, installing a silencer after blow-off valve is recommended. If the blow-off valve is located upstream of the charge air cooler, air temperature can rise up to 200°C. It is recommended to blow-off hot air outside the plant.

- Signs

  – Following figure shows exemplarily the risks in the area of a combustion engine. This may vary slightly for the specific engine.

    This warning sign has to be mounted clearly visibly at the engine as well as at all entrances to the engine room.

2025-06-16 - 1.0

Figure 199: Warning sign E11.48991-1108

- Prohibited area signs.

  Depending on the application, it is possible that specific operating ranges of the engine must be prohibited.

  In these cases, the signs will be delivered together with the engine, which have to be mounted clearly visibly on places at the engine which allow intervention of the engine operation.

- Optical and acoustic warning device

  Communication in the engine room may be impaired by noise. Acoustic warning signals might not be heard. Therefore it is necessary to check where at the plant optical warning signals (e.g. flash lamp) should be provided.

  In any case, optical and acoustic warning devices are necessary while using the turning gear and while starting/stopping the engine.

9.2 Programme for Factory Acceptance Test (FAT)

2025-06-16 - 1.0

1 Purpose

This instruction specifies the standard of tests and checks to be carried out during Factory Acceptance Tests (FAT) of marine engines. The following tests and checks are based on the rules and regulations of the classification societies as well as the ISO standards 3046 and 15550 in their versions at the time when this instruction is published and which have to be conducted to fulfill the requirements of a standard FAT.

2 Scope

This instruction is valid for all employees of companies and business units mentioned below, and is binding for all employees, which are affected by this instruction within the scope of their duties. The respective manager has to ensure that the employees know and observe this instruction. It is valid for marine applications of medium-, and high speed engines with a nominal speed up to 1000rpm and engine driving generators.

Valid for the following locations: Augsburg; Aurangabad; Saint-Nazaire

Valid for the following business units: SBU E

Valid for the following departments: FR-EE; RM-IN-PE; PEAA

3 Terms and definitions

Term	Definition
FAT	Factory Acceptance Test
CPP	Controllable Pitch Propeller
FPP	Fixed Pitch Propeller
IACS	International Association of Classification Societies

4 Engine testing

The complete test of a medium speed engine on a test bed requires several days. Therefore, the test is separated into two periods, the pre-test and the demonstration test. The pre-test is an internal test, which is partially to be done in presence of the classification society if required. The demonstration test is to verify the engine quality and observance of contractually agreed terms and conditions in presence of classification society and customer. For each engine, an engine specific procedure for the demonstration test has to be generated based on the tests and checks of point 4.2 of this instruction and contractual agreements with the customer. Additional test requests by the classification society have to be considered in the test procedure. Under the following points the standard scope of pre-test and demonstration test is specified.

4.1 Pre-tests (internal tests)

The pre-test is divided into tests and checks to be carried out prior to the first engine start and subsequent checks during engine operation. The main focus is to detect and fix technical issues and adjust the engine before starting the demonstration tests. Some checks of the pre-tests are required by classification rules. Before conducting these tests the corresponding surveyor of the classification society has to be informed about the pre-test date in time.

Figure 200: Programme for Factory Acceptance Test (FAT) – Part 1

2025-06-16 - 1.0

4.1.1 Main tests and check before first engine start

a) check crank web deflection after alignment of the engine (results to be stated in FAT protocol)
b) flushing of all media systems (lube oil, fuel oil, water)
c) visual check of engine including cam shaft and crank shaft housing (before first engine start and subsequently during operation)
d) test of alarm and safety system. The requirements of the classification society and engine manufacturer specification (check of safety functions F0387EN) must be fulfilled. The test results must be stated in the FAT protocol.

4.1.2 Function and performance check

Limits and requirements for each test can be found in project guides, rules of classification societies and internal specifications of the engine manufacturer. The internal testing of engines is generally specified in the Guideline “F0387EN” of the engine manufacturer. The following points represent the minimum of tests to be conducted to ensure the functionality and performance of the engine.

a. Start of tests and calculation of start air consumption in gas and diesel operation. To be done at least once per shipset for each engine type. The results have to be stated in each FAT protocol for reference.
b. Thermographic inspection (according to working instruction W0202EN - Surface Temperature Examination on Engines and Components for Marine Application) of engine insulation for confirmation of SOLAS surface temperature requirements.
c. Noise level and vibration measurements according to ISO 10816-6 and manufacturer guidelines (only to be carried out and stated in the FAT protocol if there is a contractual obligation).
d. Integration tests to be conducted on each engine, except if the tests have already been conducted on an identical engine of the same vessel or a sister vessel (same yard, same shipping company, same type of vessel). The scope of the tests has to be agreed upon with the classification society for selected cases based on the FMEA required in UR M44/M78 of IACS. For the alarm and safety system, an engine-independent test is carried out in advance and witnessed by the classification society. In the case of the FAT, only engine-related tests, such as the injection module failures, are additionally witnessed.
e. Performance Check: The engine performance is to be tested at the load points listed in table 1. Further information can be found under point 4.3 of this instruction. Performance readings must be stated in the FAT protocol. The specific fuel consumption has to be recorded an calculated to ISO-conditions in all load points, except in idle operation.
f. Governor test (load drop): Sudden load drop from full load to zero load. Results must be stated in the FAT protocol.
g. Check of attached engine flaps and valves (blow off, blow by, waste gate, jet assist).
h. Visual check for leakages on fuel oil, lube oil and water systems of the engine (check of connecting flanges, screw connections and inspection drillings).
i. Surge test of turbocharger on new engine configurations during the turbocharger-matching process. Results not to be stated in the FAT protocol.
j. Cylinder liner inspection (only engines ≥ 32cm liner diameter) of one cylinder liner per engine by borescope. Evaluation of the cylinder liner surface according to Q10.09121-3325 “Visual Test Cylinder Liner Inspection after Running-In”. In case of additional inspections (e.g. dismantling of piston) during demonstration tests the borescope inspection is omitted.)

Figure 201: Programme for Factory Acceptance Test (FAT) – Part 2

2025-06-16 - 1.0

4.2 Demonstration tests

The demonstration test is a final quality approval of the engine before its delivery in presence of the classification and the customer. The demonstration test has to be done according to the engine-specific test procedure (demonstration test), confirmed by the classification society and customer. The test procedure has to be sent to the classification society and customer one-week prior to the demonstration test at the latest. The scope of the FAT-procedure (demonstration test) is based on the following standards:

a. Switch from liquid to gas operation and back at minimum and nominal load.
b. One gas start (only on dual fuel engines with gas start functionality)
c. Performance Check: The engine performance has to be tested on the load points listed in table 1. Further information can be found under point 4.3 of this instruction.
d. Visual check of crank case, camshaft, rollers and gear drive after engine stop.

Optional tests and inspections only by request of the classification society, contractual agreement with customer or by indication of irregularities.

4.3 Engine performance check

The engine performance check has to be done on all load points listed in table 1. Engines for generator application (incl. diesel-electric dredger) have to be tested on the generator curve. Engines for CPP-application and diesel-mechanic dredger application with propulsion function have to be tested on the recommend combinator curve of the engine manufacturer. Engines for diesel-mechanic propulsion application with fixed pitch propeller (exclusively mechanical pump drive) and water jet application have to be tested on the recommended FPP-curve of MAN-ES. Engines with ECOMAP function have to be tested on the standard full load map only. Additional mappings can be tested according to a contractual agreement with the customer. Between pre-tests and demonstration tests minor adjustments for engine optimization are allowed. These adjustments must not lead to an excess of the engine specifications in any load point and have to be stated in the FAT-protocol. The performance parameter to be measured are specified in ISO 15550. For all measurement devices the calibration tolerances of this standard are to be fulfilled and the given calibration intervals of the specific manufacturers have to be considered. The calibrations have to fulfil the requirements given by the QM-system and the documentation of the calibration have to be available at any time . All performance data of the engines have to be within the specification limits (documents: List of measuring and control devices, quality criteria of engine) of the engine manufacturer. The performance readings have to be conducted according to the specified instructions of the engine manufacturer.

Figure 202: Programme for Factory Acceptance Test (FAT) – Part 3

2025-06-16 - 1.0

	Test points	Factory Acceptance Test (FAT)			
		Pre- Tests		Demonstration tests	
Diesel engines	100 %	-		60min*	
	110 %	-		M	
	85% (nominal continuous cruise power)**	-		M	
	Minimum speed at full constant torque - (mechanical pump drive only)	-		M	
	75%	M		-	
	50%	M		-	
	25%	M		-	
	Idle*** (only engines driving generators)	M		-	
Dual Fuel (DF-) engines		Gas mode	Diesel mode	Gas mode	Diesel mode
	100%	-	-	60min*	60min*
	110%	-	-	-	M
	85% (nominal continuous cruise power)**	-	-	M	M
	75%	M	M	-	-
	50%	M	M	-	-
	25%	M	M	-	-
	Idle*** (only engines driving generators)	-	M	-	-

* 2 readings have to be done at an interval of 30 min. On DF-engines only one reading in Diesel and one in Gas-mode.

** Replaces the 90% load point of classification rules.

M = Minimum 15 minutes and steady-state conditions reached (acc. Instruction conducting a measurement of MAN-ES)

Idle*** Nominal engine speed

For all trial conditions provision should be made for time needed by the Surveyor to carry out visual inspections

Table 1: Engine performance check

Figure 203: Programme for Factory Acceptance Test (FAT) – Part 4

2025-06-16 - 1.0

4.4 Handling of quality issues

A major purpose of the engine test run is to find and to fix potential quality issues during the pre-tests of the engine (before FAT). All quality issues are generally to be handled according to the official process for quality assurance of the engine manufacturer. With the beginning of the engine FAT all quality issues should have been solved. In case of any open issues, customer and classification society have to be informed prior the beginning of the FAT. Existing and upcoming quality issues during FAT have to be documented in the FAT protocol. Measures to fix these quality issues have to be defined by the manufacturer with agreement of customer and classification society.

During FAT the quality of the product (engine, Genset) has to be inspected as a final step before delivery. The goal is to conduct the engine operation without any unexpected alarm, shut down or load reduction. It has to be ensured that the engine functionality is given as expected and applicable regulations (class rules, emission rules) and contractual agreements are fulfilled. Any abnormalities which might led to functional impact during further engine operation on board have to be eliminated before the engine is handed over to the customer.

In case of any changes needed after delivery of the engines (e.g. change of components, software), this must be implemented latest during commissioning. These changes and elimination of the failure has to be ensured and documented by the commissioning staff of the engine manufacturer.

4.5 After engine operation

After finishing the test program, the engine has to be preserved according to working instruction W0176EN. The fuel delivery system of diesel-mechanic drives has to be adjusted so that overload power cannot be delivered during engine operation on board. Engines driving electrical generators have to be adjusted so that 110% rated power is possible.

4.6 FAT – protocol

All operations, events, findings, further measures and agreements have to be documented in one and the same engine specific FAT protocol of MAN-ES. The final FAT-protocol has to be reviewed by the surveyor of the classification society and a copy has to be handed out to the customer. The FAT protocol contains the following information:

- Cover sheet
- Signature sheet with representatives
- Operating record for all engine operation points
- Information about the fuel oil characteristics
- Line records for governor test or load jump tests
- Check of safety functions of engine and test bed before first start of the engine
- Visual inspection sheet with conducted checks and documentation of engine conditions
- Crank web deflection measurement for cold condition (check of alignment on test bed)
- Emission-relevant identification numbers, software version numbers
- Firing pressure comparison
- Starting test incl. air consumption calculation of reference engine
- Characteristic NOx emission Map (only for variable speed engines and parent engine protocols)
- Operating data sheet to estimate the engine output
- Calibration informations about fuel oil, fuel gas and torque measurement devices

Figure 204: Programme for Factory Acceptance Test (FAT) – Part 5

2025-06-16 - 1.0

5 References - applicable documents always refer to the current version unless stated otherwise.

- IACS-regulations and regulations of classification societies
- ISO 15550, ISO 3046, ISO 10816-6
- F0387EN Checklist for Rigging Up, Connecting, Commissioning, Performing the Test Run and Performing the Customer Acceptance Test for a Combustion Engine on the Test Bed
- W0202EN - Surface Temperature Examination on Engines and Components for Marine Application
- W0176EN Preserving Internal Engine Compartments of Medium-Speed Four-Stroke Diesel Engines after Test Run
- W0221EN Sampling of Fuel Oil
- Instruction I0158 - Guideline for Conducting a Measurement at the Test Beds (only for use of EDS-System)
- Q10.09054-0005 - Fuel Oil Consumption Measurement of Diesel Engines on Test Bed
- Q10.09121-3325 - Visual Test Cylinder Liner Inspection after Running-In

6 Annexes

The annexes always refer to the current version unless not stated otherwise.

- Annex 1 example of engine performance reading

Figure 205: Programme for Factory Acceptance Test (FAT) – Part 6

9.3 Engine running-in

Prerequisites

Engines require a running-in period in case one of the following conditions applies:

- When put into operation on site, if
  - after test run the pistons or bearings were dismantled for inspection or
  - the engine was partially or fully dismantled for transport.
- After fitting new drive train components, such as cylinder liners, pistons, piston rings, crankshaft bearings, big-end bearings and piston pin bearings.
- After the fitting of used bearing shells.
- After long-term low-load operation (> 500 operating hours).

Supplementary information

Operating Instructions

During the running-in procedure the unevenness of the piston-ring surfaces and cylinder contact surfaces is removed. The running-in period is completed once the first piston ring perfectly seals the combustion chamber. i.e. the first piston ring should show an evenly worn contact surface. If the engine is subjected to higher loads, prior to having been running-in, then the hot exhaust gases will pass between the piston rings and the contact surfaces of the cylinder. The oil film will be destroyed in such locations. The result is material dam-

2025-06-16 - 1.0

age (e.g. burn marks) on the contact surface of the piston rings and the cylinder liner. Later, this may result in increased engine wear and high lube oil consumption.

The time until the running-in procedure is completed is determined by the properties and quality of the surfaces of the cylinder liner, the quality of the fuel and lube oil, as well as by the load of the engine and speed. The running-in periods indicated in following figures may therefore only be regarded as approximate values.

Operating media

Liquid fuel engines

The running-in period may be carried out preferably using DMA or DMB.

The fuel used must meet the quality standards see section Specification for engine supplies, Page 253 and the design of the fuel system.

Dual fuel engines

Dual fuel engines are run in using liquid fuel mode with the fuel intended as the pilot fuel.

Gas fuel engines

For the running-in of gas four-stroke engines it is best to use the gas which is to be used later in operation.

Lube oil

The running-in lube oil must match the quality standards, with regard to the fuel quality.

Engine running-in

Cylinder lubrication (optional)

The cylinder lubrication must be switched to "Running In" mode during completion of the running-in procedure. This is done at the control cabinet or at the control panel (under "Manual Operation"). This ensures that the cylinder lubrication is already activated over the whole load range when the engine starts. The running-in process of the piston rings and pistons benefits from the increased supply of oil. Cylinder lubrication must be returned to "Normal Mode" once the running-in period has been completed.

Checks

Inspections of the bearing temperature and crankcase must be conducted during the running-in period:

- The first inspection must take place after 10 minutes of operation at minimum speed.
- An inspection must take place after operation at full load respectively after operational output level has been reached.

The bearing temperatures (camshaft bearings, big-end and main bearings) must be determined in comparison with adjoining bearings. For this purpose an electrical sensor thermometer may be used as a measuring device.

At 85% load and at 100% load with nominal speed, the operating data (ignition pressures, exhaust gas temperatures, charge air pressures, etc.) must be measured and compared with the acceptance report.

Standard running-in programme

Dependent on the application the running-in programme can be derived from the figures in paragraph Diagram(s) of standard running-in, Page 487. During the entire running-in period, the engine output has to be within the marked output range. Critical speed ranges are thus avoided.

Running-in during commissioning on site

Most four-stroke engines are subjected to a test run at the manufacturer´s premises. As such, the engine has usually been run in. Nonetheless, after installation in the final location, another running-in period is required if the pistons or bearings were disassembled for inspection after the test run, or if the engine was partially or fully disassembled for transport.

2025-06-16 - 1.0

Running-in after fitting new drive train components

If during revision work the cylinder liners, pistons, or piston rings are replaced, a new running-in period is required. A running-in period is also required if the piston rings are replaced in only one piston. The running-in period must be conducted according to following figures or according to the associated explanations.

The cylinder liner may be re-honed according to working instructions 050.05, if it is not replaced. A transportable honing machine may be requested from one of our service and support locations.

Running-in after refitting used or new bearing shells (crankshaft, connecting rod and piston pin bearings)

When used bearing shells are reused, or when new bearing shells are installed, these bearings have to be run in. The running-in period should be 3 to 5 hours under progressive loads, applied in stages. The instructions in the preceding text segments, particularly the ones regarding the "Inspections", and following figures must be observed.

Idling or no-load operation at higher speeds for long periods should be avoided if at all possible.

Running-in after low-load operation

Continuous operation in the low-load range may result in substantial internal pollution of the engine. Residue from fuel and lube oil combustion may cause deposits on the top-land ring of the piston exposed to combustion, in the piston ring channels as well as in the inlet channels. Moreover, it is possible that the charge air and exhaust pipes, the charge air cooler, the turbocharger and the exhaust gas tank may be polluted with oil.

Since the piston rings have adapted themselves to the cylinder liner according to the running load, increased wear resulting from quick acceleration and possibly with other engine trouble (leaking piston rings, piston wear) should be expected.

Therefore, after a longer period of low-load operation (≥ 500 hours of operation) a running-in period should be performed again, depending on the power, according to following figures.

Also for instruction see section Low-load operation, Page 68.

Note:
For further information, you may contact the MAN Energy Solutions customer service or the customer service of the licensee.

Diagrams of standard running-in

2025-06-16 - 1.0

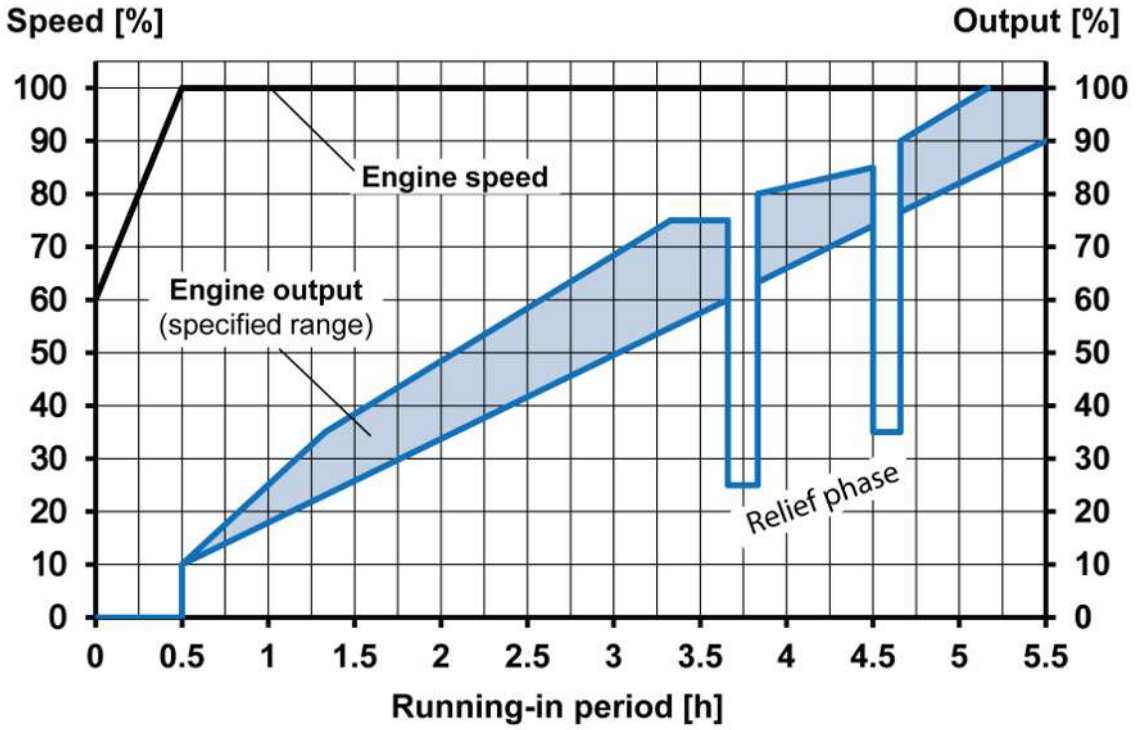

Figure 206: Standard running-in programme engines (constant speed)

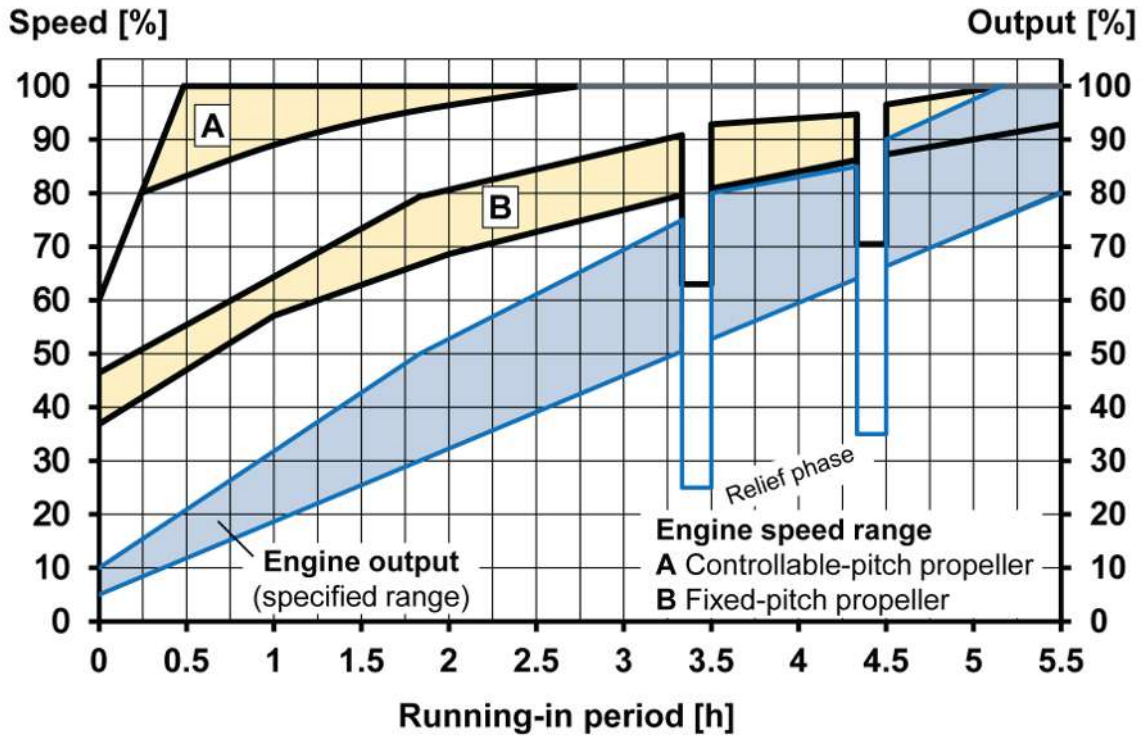

Figure 207: Standard running-in programme engines (variable speed)

2025-06-16 - 1.0

9.4 Definitions

Auxiliary GenSet/auxiliary generator operation

A generator is driven by the engine, hereby the engine is operated at constant speed. The generator supplies the electrical power not for the main drive, but for supply systems of the vessel.

Load profile with focus between 40% and 80% load.

Engine´s certification for compliance with the NO_x limits according D2 Test cycle. See within section Engine ratings (output) for different applications, Page 49 if the engine is released for this kind of application and the corresponding available output $P_{Application}$.

Blackout

The classification societies define blackout on board ships as a loss of the main source of electrical power resulting in the main and auxiliary machinery to be out of operation and at the same time all necessary alternative energies (e.g. start air, battery electricity) for starting the engines are available.

Dead ship condition

The classification societies define dead ship condition as follows:

- The main propulsion plant, boilers and auxiliary machinery are not in operation due to the loss of the main source of electrical power.
- In restoring propulsion, the stored energy for starting the propulsion plant, the main source of electrical power and other essential auxiliary machinery is assumed not to be available.
- It is assumed that means are available to start the emergency generators at all times. These are used to restore the propulsion.

Designation of engine sides

- Coupling side, CS

  The coupling side is the main engine output side and is the side to which the propeller, the alternator or other working machine is coupled.
- Free engine end/counter coupling side, CCS

  The free engine end is the front face of the engine opposite the coupling side.

Designation of cylinders

The cylinders are numbered in sequence, from the coupling side, 1, 2, 3 etc. In V engines, looking on the coupling side, the left hand bank of cylinders is designated A, and the right hand bank is designated B. Accordingly, the cylinders are referred to as A1-A2-A3 or B1-B2-B3, etc.

2025-06-16 - 1.0

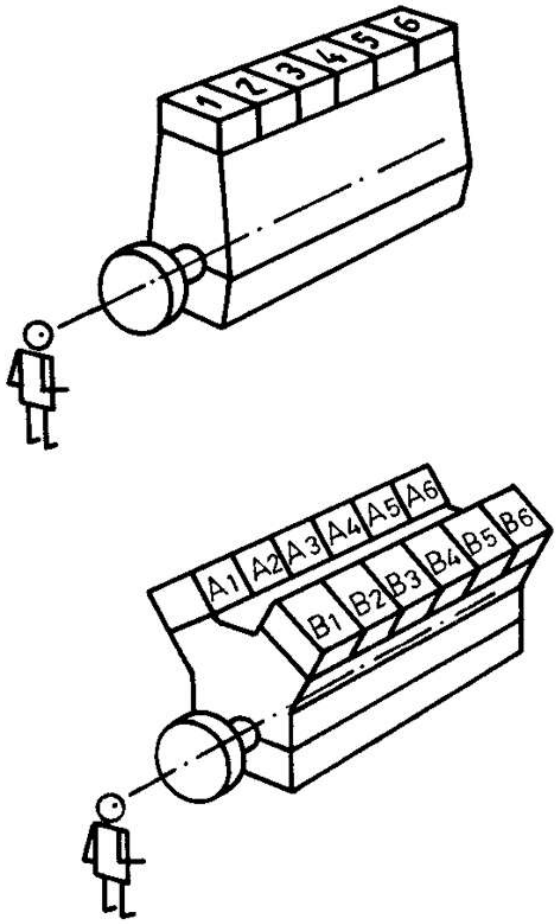

Figure 208: Designation of cylinders

Direction of rotation

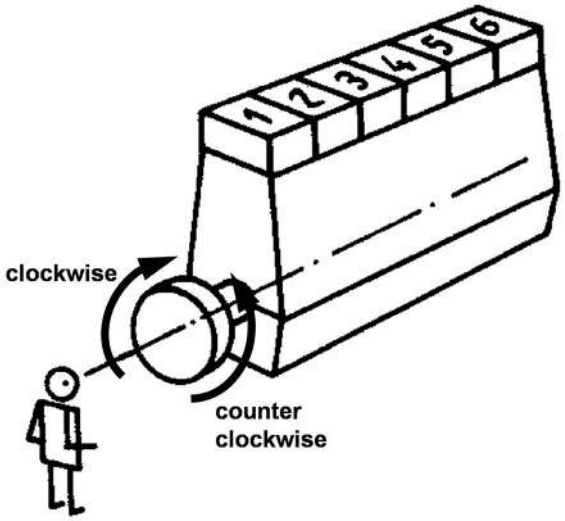

Figure 209: Designation: Direction of rotation seen from flywheel end

2025-06-16 - 1.0

Electric propulsion

The generator being driven by the engine supplies electrical power to drive an electric motor. The power of the electric motor is used to drive a controllable pitch or fixed pitch propeller, pods, thrusters, etc.

Load profile with focus between 80% and 95% load.

Engine´s certification for compliance with the NO_x limits according E2 Test cycle. See within section Engine ratings (output) for different applications, Page 49 if the engine is released for this kind of application and the corresponding available output $P_{Application}$.

GenSet

The term "GenSet" is used, if engine and electrical alternator are mounted together on a common base frame and form a single piece of equipment.

Gross calorific value (GCV)

This value supposes that the water of combustion is entirely condensed and that the heat contained in the water vapor is recovered.

Idling operation

Idling/Idling operation refers to operation:

- Before the engine is coupled to the propulsion system or to the mechanical dredge pump
- Of the GenSet with open Genoswitch

A distinction is made between:

- Idling at minimum speed and
- Idling at rated speed

Mechanical propulsion with controllable pitch propeller (CPP)

A propeller with adjustable blades is driven by the engine.

The CPP´s pitch can be adjusted to absorb all the power that the engine is capable of producing at nearly any rotational speed.

Load profile with focus between 80% and 95% load.

Engine´s certification for compliance with the NO_x limits according E2 Test cycle. See within section Engine ratings (output) for different applications, Page 49 if the engine is released for this kind of application and the corresponding available output $P_{Application}$.

Mechanical propulsion with fixed pitch propeller (FPP)

A fixed pitch propeller is driven by the engine. The FPP is always working very close to the theoretical propeller curve (power input ~ n^3). A higher torque in comparison to the CPP even at low rotational speed is present.

Load profile with focus between 80% and 95% load.

Engine´s certification for compliance with the NO_x limits according E3 Test cycle. See within section Engine ratings (output) for different applications, Page 49 if the engine is released for this kind of application and the corresponding available output $P_{Application}$.

2025-06-16 - 1.0

Multi-engine propulsion plant

In a multi-engine propulsion plant at least two or more engines are available for propulsion.

Net calorific value (NCV)

This value supposes that the products of combustion contain the water vapor and that the heat in the water vapor is not recovered.

No-load operation

As soon as the engine has been coupled, or a GenSet with closed Geno switch has been connected to electrical grid and no load has yet been delivered, this is named as no-load operation.

Offshore application

Offshore construction and offshore drilling place high requirements regarding the engine´s acceleration and load application behaviour. Higher requirements exist also regarding the permissible engine´s inclination.

Due to the wide range of possible requirements such as flag state regulations, fire fighting items, redundancy, inclinations and dynamic positioning modes all project requirements need to be clarified at an early stage.

Output

- ISO standard output (as specified in DIN ISO 3046-1)

  Maximum continuous rating of the engine at nominal speed under ISO conditions, provided that maintenance is carried out as specified.
- Operating-standard-output (as specified in DIN ISO 3046-1)

  Maximum continuous rating of the engine at nominal speed taking in account the kind of application and the local ambient conditions, provided that maintenance is carried out as specified. For marine applications this is stated on the type plate of the engine.
- Fuel stop power (as specified in DIN ISO 3046-1)

  Fuel stop power defines the maximum rating of the engine theoretical possible, if the maximum possible fuel amount is used (blocking limit).
- Rated power (in accordance to rules of DNV)

  Maximum possible continuous power at rated speed and at defined ambient conditions, provided that maintenances carried out as specified.
- Output explanation

  Power of the engine at distinct speed and distinct torque.
- 100% output

  100% output is equal to the rated power only at rated speed. 100% output of the engine can be reached at lower speed also if the torque is increased.
- Nominal output

  = rated power.
- MCR

  Maximum continuous rating.
- ECR

  Economic continuous rating = output of the engine with the lowest fuel consumption.

2025-06-16 - 1.0

Overload power (at FAT or SAT/sea trial)

Only if required by rules of classification societies, it is admitted to operate the engine at 110% of rated power for a maximum of 1 h in total as part of the FAT or SAT/sea trial and in addition a maximum of 1 h in total as part of the comissioning of the plant. Engine operation has to be done under supervision of trained MAN Energy Solutions personal.

Single-engine propulsion plant

In a single-engine propulsion plant only one single-engine is available for propulsion.

Suction dredger application (mechanical drive of pumps)

For direct drive of a suction dredger pump by the engine via gear box the engine speed is directly influenced by the load on the suction pump.

The power demand of the dredge pump needs to be adapted to the operating range of the engine, particularly while start-up operation. Load profile with focus between 80% and 100% load.

Engine´s certification for compliance with the NO_x limits according C1 Test cycle. See within section Engine ratings (output) for different applications, Page 49 if the engine is released for this kind of application and the corresponding available output $P_{Application}$.

Water jet application

A marine propulsion system that creates a jet of water that propels the vessel. The water jet propulsion is always working close to the theoretical propeller curve (power input ~ n^3). With regard to its requirements the water jet propulsion is identical to the mechanical propulsion with FPP.

Load profile with focus between 80% and 95% load.

Engine´s certification for compliance with the NO_x limits according E3 Test cycle. See within section Engine ratings (output) for different applications, Page 49 if the engine is released for this kind of application and the corresponding available output $P_{Application}$.

Weight definitions for SCR

- Handling weight (reactor only):

  This is the "net weight" of the reactor without catalysts, relevant for transport, logistics, etc.
- Operational weight (with catalysts):

  That's the weight of the reactor in operation, that is equipped with a layer of catalyst and the second layer empty – as reserve.
- Maximum weight structurally:

  This is relevant for the static planning purposes maximum weight, that is equipped with two layers catalysts.

2025-06-16 - 1.0

9.5 Abbreviations

Abbreviation	Explanation
BN	Base number
CBM	Condition based maintenance
CCM	Crankcase monitoring system
CCS	Counter coupling side
CS	Coupling side
ECR	Economic continuous rating
EDS	Engine diagnostics system
GCV	Gross calorific value
GVU	Gas Valve Unit
HFO	Heavy fuel oil
HT CW	High temperature cooling water
LT CW	Low temperature cooling water
MCR	Maximum continuous rating
MDO	Marine diesel oil
MGO	Marine gas oil
MN	Methane number
NCV	Net calorific value
OMD	Oil mist detection
SaCoS	Safety and control system
SAT	Site acceptance test
SECA	Sulphur emission control area
SP	Sealed plunger
STC	Sequential turbocharging
TAN	Total acid number
TBO	Time between overhaul
TC	Turbocharger
TC	Temperature controller
ULSHFO	Ultra low sulphur heavy fuel oil

2025-06-16 - 1.0

9.6 Symbols

Note:
The symbols shown should only be seen as examples and can differ from the symbols in the diagrams.

DESIGNATION	SYMBOL	CODE	DESIGNATION	SYMBOL	CODE
MAIN CIRCUIT (FLOW DIRECTION SHOWN)			FLEXIBLE PIPE CONNECTION		EH
SECONDARY CIRCUIT			EXPANSION BELLOWS (STEEL)		EB
CONTROL AIR PIPE, PULSE LINE, ELECTRICAL LINE			2/2 (TWO-PORT, TWO-POSITION) DIRECTIONAL CONTROL SOLENOID-OPERATED VALVE		
CAPILLARY TUBE (WITH THERMOSTATIC REGULATORS)			3/2 (THREE-PORT, TWO-POSITION) DIRECTIONAL CONTROL VALVE		
LAGGED PIPE			GENERAL SHUT-OFF VALVE		V
STEAM HEATED PIPE (HEAVY FUEL OIL OPERATION, MAIN CIRCUIT)			GATE VALVE		GV
ELECTRICALLY HEATED PIPE (HEAVY FUEL OIL OPERATION, MAIN CIRCUIT)			STRAIGHT-WAY VALVE		V

Figure 210: Symbols used in functional and pipeline diagrams 1

2025-06-16 - 1.0

DESIGNATION	SYMBOL	CODE	DESIGNATION	SYMBOL	CODE
ANGLE VALVE		V	GENERAL SHUT-OFF VALVE, MOTOR DRIVEN		MOV
VALVE WITH MINIMUM FLOW		V	QUICK ACTING SHUT-OFF VALVE		V
GENERAL THREE-WAY VALVE		CK	SAFETY VALVE (STRAIGHT WAY)		PSV
THREE-WAY VALVE		V	SAFETY VALVE (ANGLE)		PSV
COCK		CK	BACK PRESSURE VALVE (STRAIGHT WAY)		BPV
SHUT-OFF VALVE WITH VENTILATION		V	BACK PRESSURE VALVE (ANGLE)		BPV
NON-RETURN VALVE		NRV	DIAPHRAGM VALVE (PNEUMATICALLY-OPERATED)		DV
NON-RETURN VALVE (CAN BE SHUT OFF)		NRV	DIAPHRAGM SHUTTLE VALVE		DV
ANGLE NON-RETURN VALVE		NRV	MOTORISED VALVE		MOV
SOLENOID-OPERATED VALVE		SOV	GENERAL THREE-WAY VALVE, MOTOR DRIVEN		MOV
SOLENOID-OPERATED VALVE (AUTOMATIC VENT)		SOV	MOTORISED SHUTTLE VALVE		MOV
GENERAL SHUT-OFF VALVE, GENERAL DRIVE		V	GENERAL SHUT-OFF VALVE WITH TRANSATORY MOTON VALVE		V

Figure 211: Symbols used in functional and pipeline diagrams 2

2025-06-16 - 1.0

DESIGNATION	SYMBOL	CODE	DESIGNATION	SYMBOL	CODE
PISTON-OPERATED VALVE		POV	PRESSURE REDUCING VALVE		PCV
SHUTTLE VALVE WITH DRIVE PISTON		POV	PRESSURE CONTROL VALVE		PCV
SELF-CLOSING VALVE (STRAIGHT WAY)		QV	TEMPERATURE REGULATOR (SELF-ACTUATING DISTRIBUTION VALVE)		TCV
SELF-CLOSING VALVE (ANGLE)		QV	TEMPERATURE REGULATOR (SELF-ACTUIATING MIXING VALVE)		TCV
AUTOMATIC OPENING VALVE		V	TEMPERATURE CONTROL VALVE, ELECTRICALLY CONTROLLED		TCV
FLOAT VALVE		LOV	VANE HAND PUMP		P
SPRING-LOADED ADJUSTABLE PRESSURE LIMITING VALVE		PCV	WATER TRAP		TR
SAFETY VALVE		PSV	OIL TRAP		TR
FLOW-CONTROL VALVE, ADJUSTABLE			CONDENSATE TRAP, CAN BE SHUT OFF		TR
NON-RETURN VALVE, UNIDIRECTIONAL FLOW			ACCUMULATOR, GAS CYLINDER		
NON-RETURN VALVE WITH SPRING, NORMALLY CLOSED			OILER		
PILOTED NON-RETURN VALVE WITH SPRING, FLOW IN BOTH DIRECTIONS POSSIBLE DUE TO CONTROL PRESSURE			HEATING COIL (STEAM OR WATER)		H

Figure 212: Symbols used in functional and pipeline diagrams 3

2025-06-16 - 1.0

DESIGNATION	SYMBOL	CODE	DESIGNATION	SYMBOL	CODE
PLUG-IN HEATER (STEAM OR WATER)		H	SUCTION STRAINER		STR
PLUG-IN HEATER (ELECTRIC)		H	SUCTION BELL		SB
BACKFLOW PREVENTER (DISCOTYP)		NRV	FLAME TRAP		GS
NON-RETURN FLAP		NRF	VENT		
STRAINER		STR	VENT WITH FLAME TRAP		
FUNNEL (OPEN)		FU	VENT, OUTBOARD ABOVE DECK		
FUNNEL (CLOSED)		FU	VENT CAP		
OVERFLOW CHECK TANK, DISCHARGE FUNNEL		FU	Withdrawal point for fuel oil sample		

Figure 213: Symbols used in functional and pipeline diagrams 4

9.7 Preservation, packaging, storage

9.7.1 General

Introduction

Engines are internally and externally treated with preservation agent before delivery. The type of preservation and packaging must be adjusted to:

- Means of transport
- Type and period of storage

Improper storage may cause severe damage to the product.

Packaging and preservation of engine

The type of packaging depends on:

- The requirements imposed with transport and storage period
- Climatic and environmental effects
- Which preservative agents are used

2025-06-16 - 1.0

As standard, the preservation and packaging of an engine is designed for a storage period of 12 month and for sea transport.

Note:
The packaging must be protected against damage. It must only be removed when:

- A follow-up preservation is required
- The packaged material is to be used
- Shortly before operating the engine

The condition of the packaging must be checked regularly and repaired in case of damage. Especially a VCI packaging can only provide a proper corrosion protection if it is intact and completely closed.

In addition, the engine interiors are protected by vapour phase corrosion protection. Inner compartments must not be opened while transportation and storage. Otherwise, a re-preservation of the opened compartment will be required. The inner corrosion protection can remain inside the engine.

If bare metal surfaces get exposed for example, by disassembly of the coupling device, the unprotected metal must be treated with agent "f" according to the list of recommended anti-corrosion agents (https://www.man-es.com/documentation-/corrosion-protection).

This especially applies to the tie rod where the lifting device has been mounted.

In case of an installed intake air filter there is a steel plate cover or similar around the filter fleece, which has to be used during transportation and storage.

Note:
During storage and in case of a follow-up preservation the crankshaft must not be turned. If the crankshaft is turned, usually for the first time after preservation this will be done during commissioning, the preservation is partially removed. If the engine is to be stored again for a period thereafter, then adequate re-preservation is required.

Preservation and packaging of loose equipment

Unless stated otherwise in the customer specification, the preservation and packaging of loose equipment and engine parts which are dismantled for transport, must be carried out such that:

- The preservation and packaging of loose equipment and engine parts will not be damaged during transport
- The corrosion protection remains fully intact for at least 12 months when stored in a roofed dry room

Transport

Transport and packaging of the engine, loose equipment and engine parts must be coordinated.

After transportation, any damage to the corrosion protection and packaging must be rectified, and/or MAN Energy Solutions must be notified immediately.

2025-06-16 - 1.0

9.7.2 Storage location and duration

Storage location

Storage location of engine

As standard, the engine is packaged and preserved for outdoor storage.

The storage location must meet the following requirements:

- Engine is stored on firm and dry ground.
- Packaging material does not absorb any moisture from the ground.
- Engine is accessible for visual checks.

Storage location of loose equipment

Loose equipment must always be stored in a roofed dry room.

The storage location must meet the following requirements:

- Parts are protected against environmental effects and the elements.
- The room must be well ventilated.
- Parts are stored on firm and dry ground.
- Packaging material does not absorb any moisture from the ground.
- Parts cannot be damaged.
- Parts are accessible for visual inspection.
- An allocation of loose equipment to the order or requisition must be possible at all times.

Note:
Packaging made of or including VCI paper or VCI film must not be opened or must be closed immediately after opening.

Storage conditions

In general the following requirements must be met:

- Minimum ambient temperature: –10°C
- Maximum ambient temperature: +60°C
- Relative humidity: < 60%

In case these conditions cannot be met, contact MAN Energy Solutions for clarification.

Storage period

The permissible storage period of 12 months must not be exceeded.

Before the maximum storage period is reached:

- Check the condition of the stored engine and loose equipment.
- Renew the preservation or install the engine or components at their intended location.

9.7.3 Follow-up preservation when preservation period is exceeded

A follow-up preservation must be performed before the maximum storage period has elapsed, i.e. generally after 12 months.

Request assistance by authorised personnel of MAN Energy Solutions.

2025-06-16 - 1.0

9.7.4 Removal of corrosion protection

Packaging, corrosion protection and silica gel must only be removed from the engine immediately before commissioning the engine in its installation location.

Remove outer protective layers, any foreign body from engine or component (VCI packs, blanking covers, etc.), check engine and components for damage and corrosion, perform corrective measures, if required.

The preservation agents sprayed inside the engine do not require any special attention. They will be washed off by engine oil during subsequent engine operation.

Contact MAN Energy Solutions if you have any questions.

9.8 Engine colour

Engine standard colour according RAL colour table is RAL 7040 Window grey. Other colours on request.

2025-06-16 - 1.0

This page is intentionally left blank

2025-06-16 - 1.0

Index

A

Abbreviations 494
Acceleration times 65, 66
Additions to fuel consumption 98
Aging (Increase of S.F.C.) 105, 106
Air
  Consumption (jet assist) 403
  Flow rates 107
  Starting air consumption 96, 103
  Temperature 107
Air receivers
  Capacities 402
Air vessels
  Capacities 303
  Condensate amount 301
Airborne noise 167
Alignment
  Engine 216
Alphatronic 3000 Propulsion Control System 454
Alternator
  Reverse power protection 80
Ambient conditions causes derating 50
Angle of inclination 43
Approved applications 25
Arctic conditions 73
Arrangement
  Attached pumps 193
  Flywheel 187
Attached pumps
  Arrangement 193
  Capacities 107
Auxiliary generator operation
  Definiton 489
Auxiliary GenSet operation
  Definition 489
Auxiliary power generation 25
Available outputs
  Permissible frequency deviations 78
  Related reference conditions 49, 50

B

Balancing of masses 182
Bearing, permissible loads 179
Bilge water/oily water
  Cleaning of charge air cooler 359
  Condensate drain starting air system 361
  Condensate monitoring tank drain 360
  Nozzle cooling water drain 361
  Turbocharger washing equipment 356
Blackout
  Definition 489
By-pass 44, 45

C

Capacities
  Attached pumps 107
  Pumps 107
CEON 14
Charge air
  Blow-off 44
  Blow-off device 44
  Blow-off noise 172
  By-pass 44
  By-pass device 45
  Control of charge air temperature (CHATCO) 44, 46
  Temperature control 44, 46
Charge air cooler
  Condensate amount 301
  Flow rates 107
  Heat to be dissipated 107
Cleaning of charge air cooler
  Bilge water/oily water 359
Colour of the engine 501
Combustion air
  Flow rate 107
  Specification 253
Common rail injection system 384
Componentes
  SCR system 413

2025-06-16 - 1.0

Components
Exhaust gas system 412
Components of an electric propulsion plant 458
Composition of exhaust gas 162
Compressed air
Specification 253
Compressed air system 398
Condensate amount
Air vessels 301
Charge air cooler 301
Condensate drain starting air system
Bilge water/oily water 361
Condensate monitoring tank drain
Bilge water/oily water 360
Consumption
Control air 103
Fuel 96
Fuel oil 96
Jet assist 403
Lube oil 101
Control air
Consumption 96, 103
Controllable pitch propeller
Definition 491
Operating range 84
Cooler
Flow rates 107
Heat radiation 107
Heat to be dissipated 107
Specification, nominal values 107
Temperature 107
Cooler dimensioning, general 338
Cooling water
Inspecting 253, 284
Specification 253, 279
Specification for cleaning 253, 284, 286
System description 336
System diagram 336
Cooling water system – Low-speed operation 350
Crankcase vent and tank vent 332
Crankshaft
Moments of inertia – Damper, flywheel 181
Cross section, engine 32, 33
Cyber security 14
Cylinder
Designation 489
Cylinder liner, removal of 425

D

Damper
Moments of inertia – Crankshaft, flywheel 181
Dead ship condition
Definition 489
Required starting conditions 57, 58
Definition of engine rating 48
Definitions
Engine start 55
Derating
As a function of water temperature 50
Due to ambient conditions 50
Due to special conditions or demands 50
Design parameters 34
Diagram
Lube oil system 321
Diagram condensate amount 301
Diesel fuel see Fuel oil 101
Propeller 450

E

Earthing
Bearing insulation 81
Measures 81
Welding 83
ECR
Definition 492
Electric operation 63

2025-06-16 - 1.0

Electric propulsion
Advantages 457
Definition 491
Efficiencies 457
Engine selection 460
Example of configuration 465
Over-torque capability 463
Plant components 458
Plant design 459
Switchboard and alternator design 461
Emissions
Exhaust gas – IMO standard 161
Static torque fluctuation 184
Torsional vibrations 176
Engine
3D Engine viewer 293, 431
Alignment 216
Colour 501
Cross section 32, 33
Definition of engine rating 48
Description 11
Designation 34, 489
Equipment for various applications 44
Inclinations 43
Main dimensions 36, 38
Operation under arctic conditions 73
Outputs 48
Programme 11
Ratings 48
Ratings for different applications 49, 50
Room layout 419
Running-in 485
Single-engine propulsion plant (Definition) 493
Speeds 48
Speeds, Related main data 51
Weights 36, 38
Engine automation
Functionality 237
Installation requirements 244
Interfaces 240
Operation 236
Supply and distribution 230
Technical data 242
Engine cooling water specifications 279
°
Engine pipe connections and dimensions 294
Engine ratings
Power, outputs, speeds 48
Suction dredger 493
Equipment for various applications 44
Exhaust gas
Back pressure 50
Composition 162
Ducting 444
Emission 161
Flow rates 107
Pressure 50
Smoke emission index 161
System description 411
Temperature 107
Exhaust gas aftertreatment
SCR 27
Exhaust gas noise 170
Exhaust gas pressure
Due to after treatment 52
Exhaust gas system
Assemblies 412
Components 412

F

Factory Acceptance Test (FAT) 479
Filling volumes 159
Firing order 183
Fixed pitch propeller
Definition 491
Flexible pipe connections
Installation 296

Index

2025-06-16 - 1.0

Flow rates
Air 107
Cooler 107
Exhaust gas 107
Lube oil 107
Water 107
Flow resistances 159
Flywheel
Arrangement 187
Moments of inertia – Crankshaft, damper 181
Follow-up preservation 500
Foundation
Chocking with synthetic resin 203
General requirements 196
Resilient seating 206
Rigid seating 197
Four stroke diesel engine programme for marine 11
Frequency deviations 78
Fuel
Consumption 96, 104
Dependent on ambient conditions 104
Diagram of HFO treatment system 382
Diagram of MDO supply system 375
Diagram of MDO treatment system 368
HFO treatment 377
MDO supply 368, 375
MDO treatment 368
Recalculation of consumption 104
Stop power, definition 492
Supply system (HFO) 382
Viscosity-diagram (VT) 278
Fuel oil
Consumption 96
HFO system 382
Specification for gas oil (MGO) 253

G

Gas oil
Specification 253
General requirements
Fixed pitch propulsion control 86, 92
Propeller pitch control 86
General requirements for pitch control 86
Generator operation/electric propulsion
Power management 79
GenSet
Definition 491
GenSet/electric propulsion
Operating range 77
Grid parallel operation
Definition 492
Gross calorific value (GCV)
Definition 491

H

Heat radiation 107
Heat to be dissipated 107
Heating power 342
Heavy fuel oil (HFO) supply system 382
Heavy fuel oil see Fuel oil 101
HFO (fuel oil)
Supply system 382
HFO Operation 377
HFO see Fuel oil 101
HT-switching 68

I

Idle speed 51
IMO certification 78, 85
IMO Marpol Regulation 101, 161
IMO Tier II
Definition 101
IMO Tier II, IMO Tier III
Exhaust gas emission 161
Impact on foundation
Noise and vibration 173
Inclinations 43
Injection viscosity and temperature after final heater heavy fuel oil 382
Installation
Flexible pipe connections 296
Installation drawings 420

Index

2025-06-16 - 1.0

Intake air (combustion air)
Specification 288
Intake noise 168, 169
ISO
Reference conditions 48
Standard output 48, 50, 492

J

Jet assist
Air consumption 403

L

Layout of pipes 294
Leakage rate 159
Lifting device 432
LNG Carriers 465
Load
Low-load operation 68
Reduction 70
Load application
Change of load steps 88
Cold engine (only emergency case) 57
Continuous loading 60
Duration of the load application 60
Electric propulsion plants 57
Load steps 64
Maximum load step dependent on base load 64
Preheated engine 66
Ship electrical systems 63
Start-up time 59
Load reduction
As a protective safety measure 73
Recommended 72
Stopping the engine 72
Sudden load shedding 70
Low-load operation 68
LT-switching 68
Lube oil
Consumption 101
Flow rates 107
Outlets 324
Specification (HFO) 257
Specification (MGO) 253
System description 310, 312
System diagram 310, 321
Temperature 107
Lube oil filter 331
Lube oil service tank 326
Lube oil system – Low speed operation 323

M

Main dimensions
SCR componentes 39
Marine diesel oil (MDO) supply system for diesel engines 368
Marine diesel oil see Fuel oil 101
Marine gas oil
Specification 253
Marine gas oil see Fuel oil 101
MARPOL Regulation 96, 101, 161
Materials
Piping 295
Maximum load step dependent on base load 64
Maximum permissible temperature drop of exhaust gas line 30
MCR
Definition 492
MDO
Diagram of treatment system 368
MDO see Fuel oil 101
Measuring and control devices
Engine-located 246
Mechanical propulsion
System arrangement 442
Mechanical propulsion with CPP
Definition 491
Planning data 125
Mechanical propulsion with FPP
Definiton 491
Planning data 134

2025-06-16 - 1.0

Mechanical pump drive
Operating range 94
MGO (fuel oil)
Specification 253
MGO see Fuel oil 101
Moments of inertia 181
Mounting 208
Multi-engine propulsion plant
Definition 492

N

Net calorific value (NCV)
Definition 492
Noise
Airborne 167
Charge air blow-off 172
Exhaust gas 170
Intake 168, 169
Noise and vibration
Impact on foundation 173
Nominal output
Definition 492
NOx
IMO Tier II, IMO Tier III 161
Nozzle cooling system 351, 352
Nozzle cooling water drain
Bilge water/oily water 361
Nozzle cooling water module 351, 352

O

Offshore application
Definition 25, 492
Oil mist detector 44, 47
Operating
Pressures 152
Standard-output (definition) 492
Temperatures 152
Operating range
CPP 84
FPP 90
GenSet/electric propulsion 77
Mechanical pump drive 94
Operating/service temperatures and pressures 152
Operation
Acceleration times 65, 66
Load application for ship electrical systems 63
Load reduction 70
Low load 68
Propeller 65
Running-in of engine 485
Output
Available outputs, related reference conditions 49, 50
Definition 492
Engine ratings, power, speeds 48
ISO Standard 48, 49, 50
Permissible frequency deviations 78

P

Packaging 498
Part-load operation 68
Permissible frequency deviations
Available outputs 78
Pipe dimensioning 294
Piping
Materials 295
Pitch control
General requirements 86
Planning data
Electric propulsion 107, 109, 116, 118
Flow rates of cooler 107
Heat to be dissipated 107
Mechanical propulsion with CPP 125
Mechanical propulsion with FPP 134
Suction dredger/pumps (mechanical drive) 143
Temperature 107
Positions of the outlet casing of the turbocharger 446
Postlubrication 323
Power
Engine ratings, outputs, speeds 48
Power drive connection 179, 181
Power management 79
Preheating
At starting 55, 56

2025-06-16 - 1.0

Preheating module 355
Prelubrication 323
Preservation 498
PrimeServ Assist 14
Propeller
Clearance 452
General requirements for pitch control 86
Layout data 452
Operating range CPP 84
Operation, suction dredger (pump drive) 84
Propulsion Control System 454
Pumps
Arrangement of attached pumps 193
Capacities 107
Service support for FPP 106

R

Rated power
Definition 492
Ratings (output) for different applications, engine 49, 50
Reduction of load 70
Reference conditions (ISO) 48
Removal
Cylinder liner 425
Piston 425
Removal of corrosion protection 501
Reverse power protection
Alternator 80
Rigid seating 197
Room layout 419
Running-in 485

S

SaCoSone
Control Unit 217
Safety
Instructions 475
Measures 475
SCR
Boundary conditions 29
Operation and regeneration 29
Scope of supply 28
Warranty coverage 30
SCR system
Componentes 414
General 413
Installation 417
Overview 28
Recommendations 417
SCR system components
Overview 17
Sealed Plunger injection pumps 13
Selective catalytic reduction 27
Service tanks capacities 160
Slow turn 44, 46, 57, 58
Smoke emission index 161
Space requirement for maintenance 437
Specification
Cleaning agents for cooling water 253, 286
Combustion air 253
Compressed air 253
Cooling water inspecting 253, 284
Cooling water system cleaning 253, 284, 286
Engine cooling water 253, 279
Fuel (Gas oil, Marine gas oil) 253
Intake air (combustion air) 288
Lube oil (HFO) 257
Lube oil (MGO) 253
Viscosity-diagram 278
Specification for intake air (combustion air) 288
Speed
Adjusting range 52
Droop 52
Engine ratings 51
Engine ratings, power, outputs 48
Idling 52
Main data 51
Mimimum engine speed 52

Index

2025-06-16 - 1.0

Index

Speeds
- Clutch activation 51
- Idling 51
- Mimimum engine speed 51

Splash oil monitoring 44, 47
Standard engine ratings 48
Standard propulsion packages 449
Stand-by operation capability 55, 56
Starting 55, 56
Starting air
- Compressors 401
- Consumption 96, 103
- control air consumption 103
- Jet assist 403
- receivers, compressors 401
- System description 398
- System diagram 401
- Vessels 401

Starting air receivers, compressors 401
Starting air system 398
Start-up and load ramp-up 60
Start-up time 59
Static torque fluctuation 184
Stopping the engine 72
Storage 498
Storage location and duration 500
Suction dredger application
- Definition 493

Suction dredger/pumps (mechanical drive)
- Planning data 143

Sudden load shedding 70
Supply system
- Blackout conditions 395
- HFO 382
- MDO 375

Switching: HT 68
Switching: LT 68
Symbols
- For drawings 495

System description
- Lube oil 310, 312

T

Table of ratings 48
Temperature
- Air 107
- Cooling water 107
- Exhaust gas 107
- Lube oil 107

Temperature control
- Charge air 44, 46
- Media 240

Time limitation for low-load operation 68
Torsional vibration 176
Turbocharger assignments 35
Turbocharger washing equipment
- Bilge water/oily water 356

Two-stage charge air cooler 44, 46
Type of engine start 55

U

Unloading the engine 70

V

Venting
- Crankcase, turbocharger 160

Vibration, torsional 176
Viscosity-temperature-diagram 278

W

Waste gate 45
Water
- Flow rates 107
- Specification for engine cooling water 253, 279

Water jet application
- Definition 493

Water systems
- Cooling water collecting and supply system 347
- Engine cooling 336
- Miscellaneous items 350
- Nozzle cooling 351, 352

Weights
- Engine 36, 38
- Lifting device 432
- SCR componentes 39

2025-06-16 - 1.0

Welding
Earthing 83
Windmilling protection 88, 92
Works test 479

2025-06-16 - 1.0