Everllence

Zero

We are moving big things to

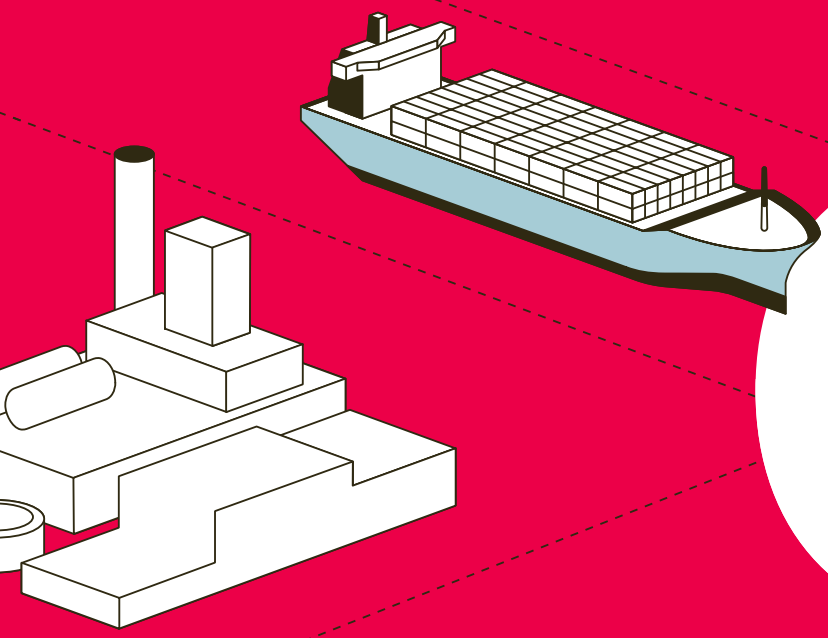

2015

Prompted by the signing of the UN climate agreement in Paris, we start thinking about how we can modernize our portfolio.

2018

Our new strategy is launched, making decarbonization central to our business success.

2023

We sum up our strategy in our new purpose – 'Moving big things to zero'.

2025

MAN Energy Solutions becomes Everllence. This rebranding underlines our ambitions for the future.

Our DNA

Our brand name brings together two key elements of our identity: 'ever' and 'excellence'.

Ever

We have been making industrial history for as long as industry has existed. The history of our own company dates all the way back to 1758. Yet our sights have always been firmly set on the future – our ingenuity and pioneering spirit set us apart and have sparked countless technological innovations and inventions.

From the invention of the diesel engine and the development of the very first steam turbine by Gutehoffnungshütte in Oberhausen to the launch of the first Power-to-Gas plant and the first subsea compressor to operate maintenance-free on the seabed at depths of 300 meters – and all the way through to the first large-scale heat pump designed to replace a coal-fired power station: **'First ever' innovations are ingrained in our DNA.**

Everllence

Excellence

It's not just the end goal that matters, but how you get there: Striving for excellence spurs us on and drives us forward. We aspire to achieve the highest standards or set new ones at every stage in the value chain.

We put excellence into practice across five dimensions: in our customer relationships, in processes and quality, in technology, in sustainability and in our corporate culture.

And we firmly believe that this relentless pursuit of excellence on every level is what has fueled our company's pioneering spirit and technological precision over the centuries – and still does to this day.

At a glance

Who better than us?

We have been pioneering cutting-edge technology and breaking new ground with sustainable innovations for more than two and a half centuries. Our technologies have made a crucial impact on key sectors of the global economy, such as power supply, industrial production and shipping.

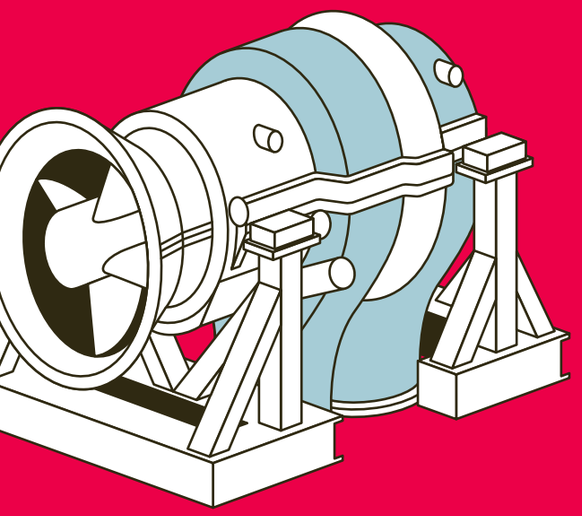

Now, with our focus on **'Moving big things to zero'**, we are channeling our efforts into promoting decarbonization in areas where electrification alone does not yet offer a viable solution.

These 'hard-to-abate' sectors need different technologies to reduce their climate-damaging emissions. This is what motivates us. Our aim is to provide these companies and industries with a portfolio of technical solutions that will enable them to achieve their climate targets. And we have decades of experience, a sustainable strategy and a global team to help us do this.

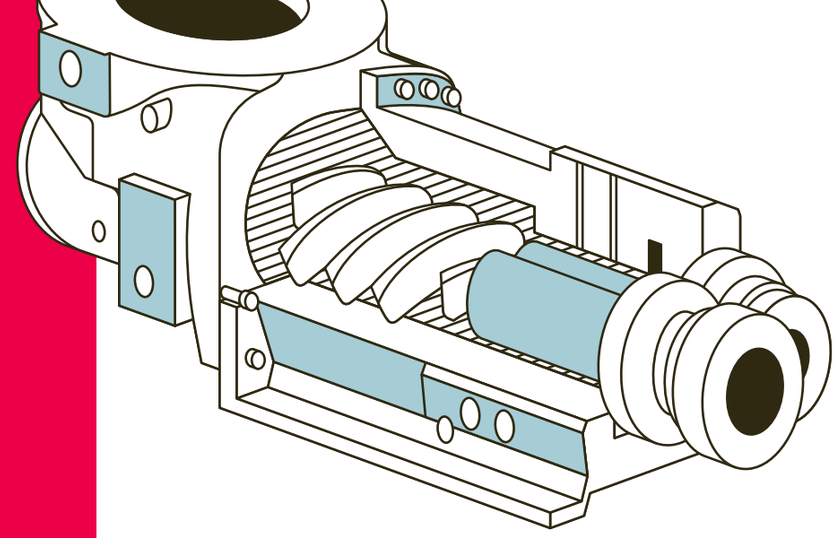

A clear objective in sight

One Everllence team

Teamwork is our superpower. We come from all kinds of cultural backgrounds and bring different experiences from our locations across the world.

But we combine our strengths, pool our passion and work together as one to develop the technologies of the future.

Following our own path

As a manufacturing company involved in mechanical engineering, we inevitably leave an environmental footprint. So we have set ourselves the ambitious goal of continuously reducing our impact: **We are aiming to cut the carbon emissions from our production plants by 50% between 2018 and 2030.** Even now, we are already getting all of the power we need for our European production sites from renewable energy sources.

260+

years of experience in developing advanced technologies

Zero

Our technologies are playing a part in achieving net-zero emissions

2030+

Most of our earnings will come from new business areas

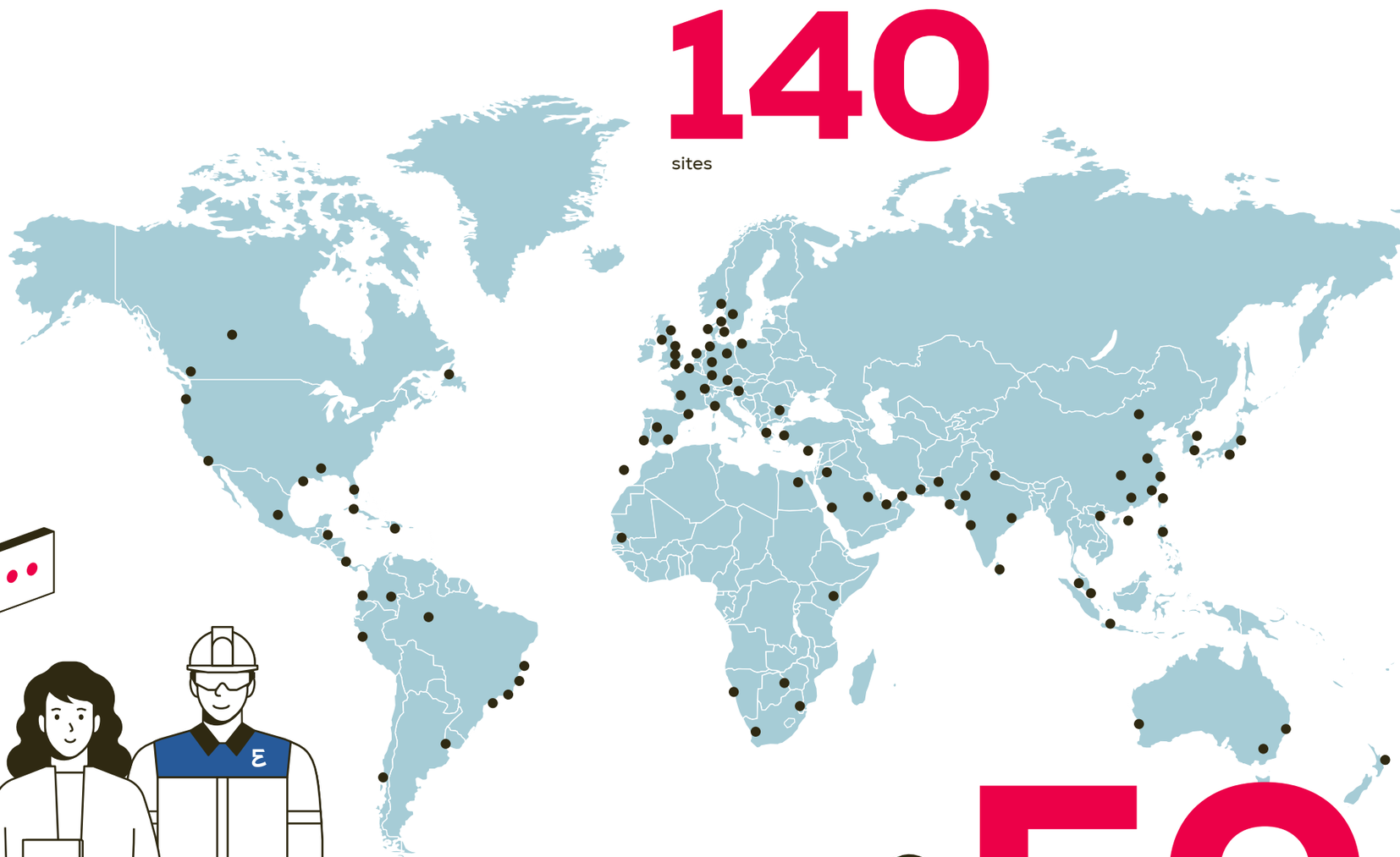

140

sites

15,000

employees worldwide

50

Well-established worldwide

We have a presence in over 50 countries across the globe and are on hand to support our customers as an innovative partner

Proven solutions for the global market

Maritime industry

We set energy in motion. As a leading system provider of efficient, integrated propulsion and energy solutions, we are at the forefront of the global market for maritime transport. Our expertise dates back to 1902, when we produced the first Alpha controllable pitch propeller.

With our knowledge and skill, we can cover an impressive range of operating profiles on a vessel – from the engine and gears right through to the propeller blades and the propulsion control system.

Now, our two-stroke and four-stroke engines are involved in more than 50% of global trade and have been setting technological standards for decades.

125,000 metric tons of CO_2 saved by using a ship that can transport around 16,000 standard containers and runs on green methanol.

Energy generation

With 30 gigawatts (GW) of installed capacity worldwide, our versatile engine power plants promote prosperity and progress by generating power efficiently even in the remotest parts of the world. Thanks to their flexibility and quick-start capability, our grid-friendly power plants are the perfect partners for renewable energy, providing control and balancing energy exactly when it is needed.

All components are supplemented with an intelligent energy management system to guarantee a reliable and economical power supply. Highly efficient engine power plants are also ideal for combined heat and power solutions.

Our engine-based combined heat and power plants provide a reliable power and heat supply for district heating networks. They are instrumental in helping to reduce dependency on coal-fired power plants – bringing down CO_2 emissions by around 60% in the process.

Industries: our turbomachinery

For industrial applications, we offer efficient turbomachines such as compressors, steam turbines and expander technologies, along with a range of digital products and services. We develop and manufacture these products at various production sites.

Our compressors form the core of large-scale heat pumps used in industry, district heating generation and food production. Our integrally geared compressors are at the forefront of both carbon capture, utilization and storage and energy storage solutions. In the basic industries – such as plastic, steel, paper or fertilizer production – and in air separation and various applications in the oil and gas segment, our machines are being put to use across the world to successful effect. Our efficient, high-performance machine trains are helping our customers implement their decarbonization strategies and optimize their processes.

Just one of our heat pumps is enough to decarbonize an entire town and supply it with climate-neutral heating.

Our after-sales business

When a company is looking to decarbonize, digital service solutions have a key role to play: They ensure that the technology the company invests in lives up to what it promises.

As well as offering technical expertise in relation to new equipment, PrimeServ delivers an outstanding service to OEM standard with a strong customer focus – for both our own machines and those from other manufacturers. This enables us to support our customers with the help of our global network, technical and digital expertise and tailored solutions – remotely or on site, worldwide, 24/7, 365 days of the year.

PrimeServ

More than 100 Everllence PrimeServ service centers across the world provide our customers with spare parts, services and training.

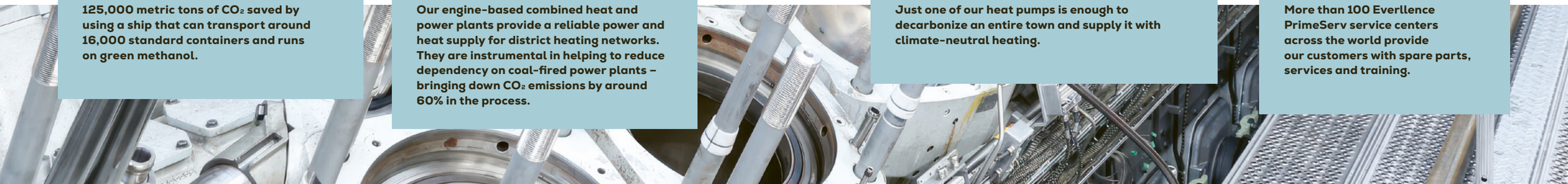

Zero is the new cool. As Everllence, we will carry on continuously implementing our corporate strategy, with its focus on decarbonization technologies, and work with our customers to forge a path toward net zero.

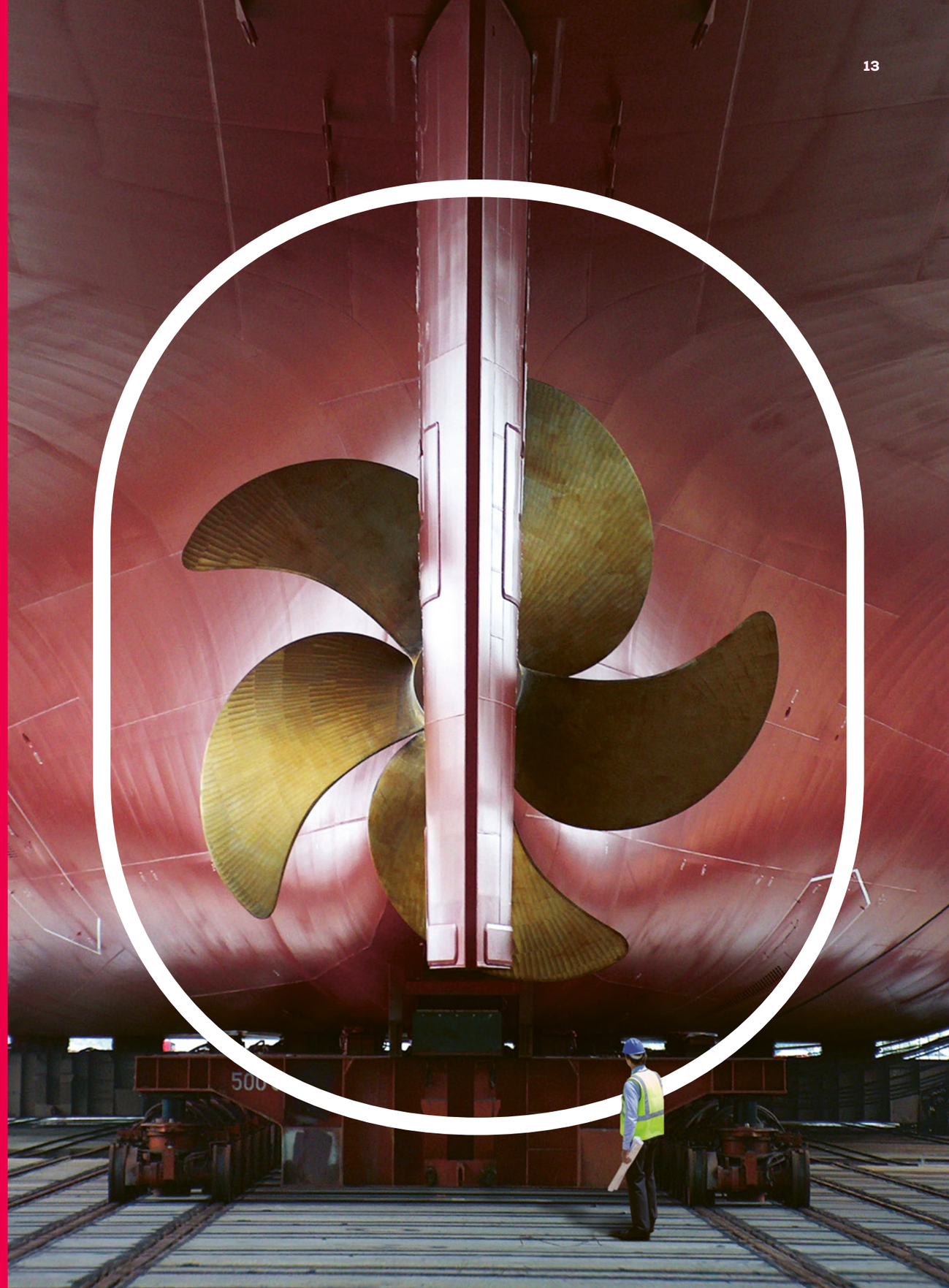

Our key technologies **for net zero**

Based on our extensive expertise and technological edge, our technologies are designed to help our customers minimize their emissions and carbon footprint.

- PEM electrolysis and Power-to-X
- Future fuel engines
- Retrofits
- Carbon capture, utilization and storage
- Large-scale heat pumps

For some of our solutions, we also act as an engineering, procurement and construction (EPC) contractor in plant engineering projects – offering our customers the best possible complete package.

Power-to-X technologies

Fueling a clean energy transition

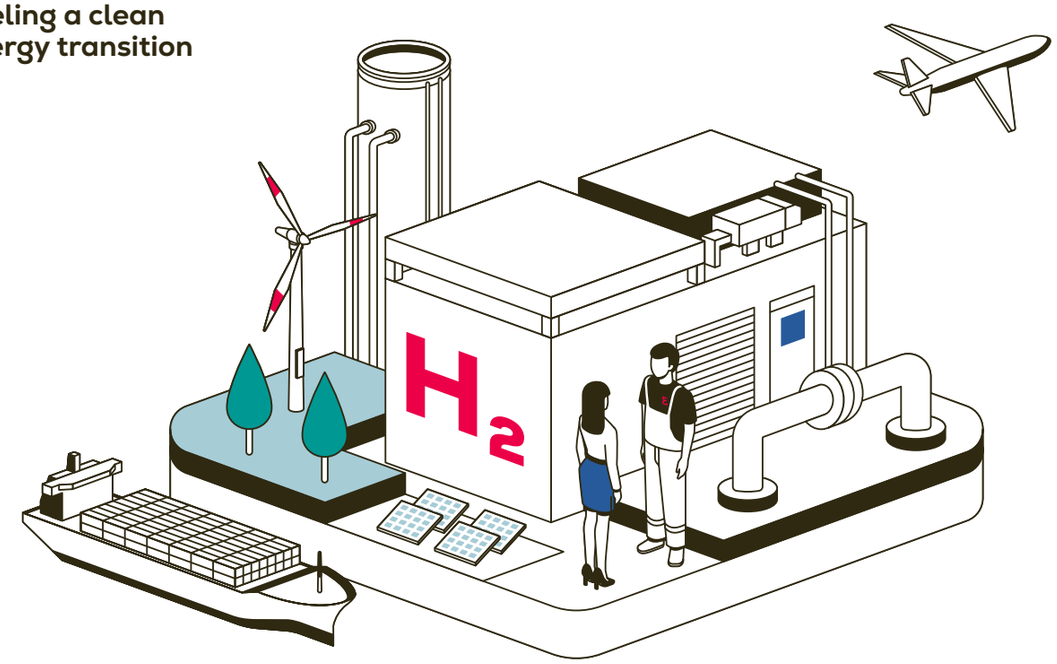

Technology
Hydrogen is a key molecule when it comes to decarbonizing the global economy and bridges power-reliant and non-electrifiable sectors. Hydrogen, along with its derivatives produced using Power-to-X (PtX) technology such as e-methane, e-methanol or e-ammonia – known as e-fuels – is therefore crucial for decarbonizing hard-to-abate sectors of industry. These include shipping, aviation and industrial sectors such as steel production, refineries and the chemical industry. As an EPC supplier, Everllence provides PtX solutions based on the PEM electrolysis stacks made by our subsidiary Quest One, which come in power classes ranging from 10 to 100 megawatts (MW) and more. PEM stands for 'Proton Exchange Membrane', a flexible process that is ideal for extracting high-purity hydrogen from fluctuating renewables.

We are also experts in reactors that turn green hydrogen into synthetic fuels during the PtX process, which means we can offer complete PtX solutions from a single source. In addition, engines for ships and for stationary power generation that can run on hydrogen or carbon-neutral e-fuels are another feature from the Everllence portfolio that add to the green value chain.

Economic potential
Efforts to achieve global decarbonization goals are predicted to lead to huge demand for hydrogen. The hard-to-abate sectors account for around one third of the world's carbon emissions and need hydrogen and synthetic fuels to reduce them. For example, shipping alone is faced with the challenge of replacing the 300 million metric tons of fuel it uses per year with greener alternatives. Green hydrogen is also essential for producing green steel.

1/3

The hard-to-abate sectors of the global economy account for around one third of the world's carbon emissions.

The Everllence factor

We offer PtX solutions for everything from energy consulting to power plants and make use of our product portfolio throughout the hydrogen value chain: from PEM electrolyzers and PtX systems to compressors and reactors. We also draw on the decades of integration and EPC expertise we have built up all over the world in the engine power plants segment. We offer a complete solution from a single source – putting us at the forefront of the clean energy transition.

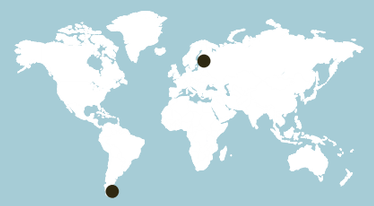

Haru Oni – harnessing wind for fuel

In late 2022, the Haru Oni demonstration plant ('Hari Oni' translates as 'land of wind') on the southern tip of Chile went into operation. The plant uses renewable electricity generated by a wind turbine to turn water into green hydrogen in an electrolyzer. This hydrogen is then combined with CO_2 captured from ambient air in a reactor made by us. The process produces carbon-neutral e-methanol, which is subsequently turned into a synthetic e-fuel that can be used as a substitute for fossil fuels in areas like road or air transport.

A hydrogen production plant in Helsinki

Helen Oy, one of Finland's largest energy companies, signed an agreement with Everllence and Quest One to build a production plant for generating green hydrogen close to Vuosaari Harbor. At the plant, three Quest One ME450 I electrolyzers will use renewable electricity to produce up to 1.35 metric tons of green hydrogen per day. The energy for this will come from renewable sources, also run by Helen Oy. Helen will make use of the waste heat from the production process in its district heating network.

Future fuel engines

Driving us toward a climate-neutral future

Technology
Whether they are used for ship propulsion systems or for generating power, our future fuel engines can run on a variety of climate-neutral fuels, including synthetic natural gas, methanol and ammonia. Our stationary engines are already 'H2-ready' – in power plants, they are currently operating with an admixture of 25% hydrogen and will run on 100% hydrogen in future.

Economic potential
International maritime traffic is responsible for around 3% of global greenhouse gas emissions. The International Maritime Organization (IMO) has set a target of bringing these emissions down to zero by 2050. This is an ambitious goal that calls for some major technological changes within the industry. In the power generation sector, the use of renewable energies is seen as a silver bullet for reducing emissions. However, renewable energy sources are not always readily available. Thanks to their high efficiency and flexibility, engine power plants are ideal for ensuring reliable energy generation alongside wind and solar power.

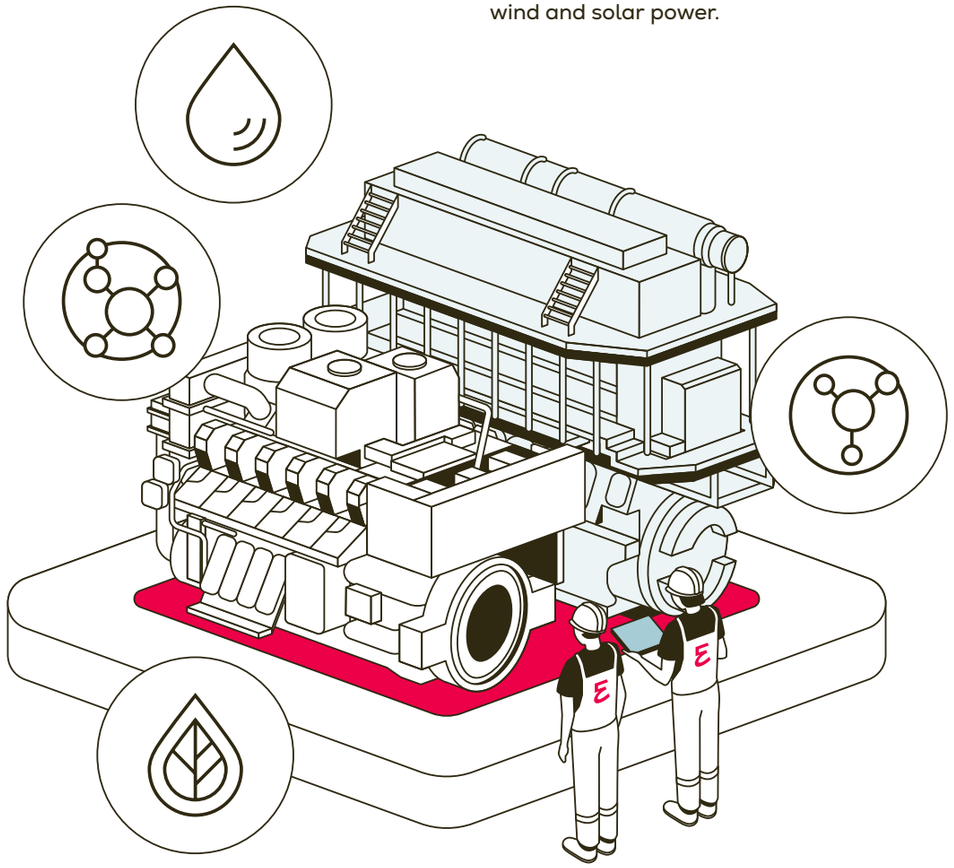

3%

International maritime traffic is responsible for around 3% of global greenhouse gas emissions.

50%

More than 50% of global trade is transported across the world's oceans using our engine technology.

The Everllence factor

More than 50% of global trade is transported across the world's oceans using our engine technology. In 2016, we teamed up with our partners in the industry associations to call for a maritime energy transition, and ever since then we have been pioneering and actively promoting climate-friendlier shipping based on alternative fuels. In the power generation sector, we have a global gigawatt fleet of generating plants and can draw on decades of experience in this field too.

Chemnitz gas-fired CHP power plant provides electricity and heat

We operate two gas engine-powered combined heat and power plants in Chemnitz. These facilities supply the city with just under 150 MW of electricity and over 130 MW of thermal output – enough to provide heating for approximately 40% of the city's population. They also reduce the carbon emissions in Chemnitz by around 60%, which is roughly equivalent to the emissions from 260,000 cars.

The Antonia Mærsk makes its maiden voyage

The container ship Antonia Mærsk, which is propelled by a dual-fuel engine, made its maiden voyage from Korea to Europe powered by green methanol. It brought with it around 16,500 standard containers and managed to reduce the carbon emissions generated on this route by up to 90%. Since taking to the waters for the first time, the ship has continued to make considerable carbon savings by consistently using methanol.

Retrofits

A new lease of life for power plants and ship engines

Technology
Our retrofits convert heavy fuel oil engines in ships and power plants into dual-fuel systems that can run on synthetic fuels in either gas or liquid form. These modifications significantly extend the engines' useful life – and can save up to 97% in carbon emissions compared to building a new ship from scratch.

Economic potential
Both power stations and cargo and passenger ships are long-term investments that will be in operation for decades to come. On average, ocean-going vessels remain in use for 25 to 30 years.

When it comes to achieving global climate targets, simply building new climate-friendly vessels and facilities is therefore not enough. Existing fleets need to be modernized as well to help drive the energy transition. Our retrofit programs make this possible.

The potential is huge: There are approximately 1,900 two-stroke engines and 1,800 four-stroke engines in ships and power plants worldwide that would be suitable for upgrading to make them more economical and for retrofitting for use with synthetic fuels.

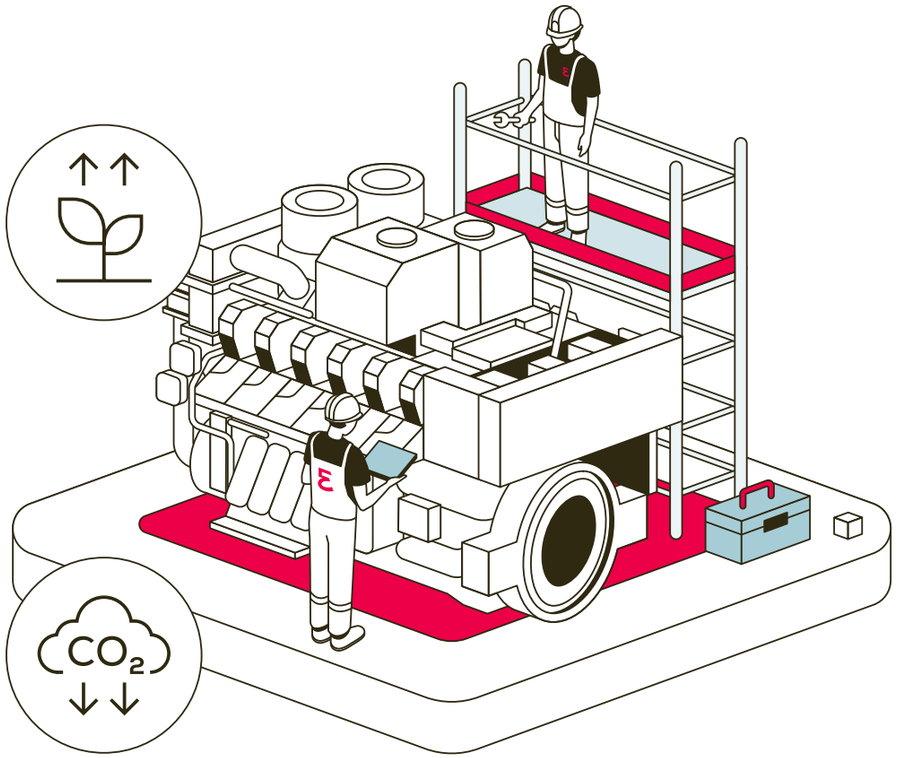

97%

Retrofitting can save up to 97% in carbon emissions compared to building a new ship.

1,900
1,800

There are approximately 1,900 two-stroke engines and 1,800 four-stroke engines in ships and power plants worldwide that would be suitable for upgrading to make them more economical.

The Everllence factor

We have many years of experience in retrofitting and upgrading our engine technology and have carried out pioneering work in converting large vessels to run on alternative fuels for shipping companies like Hapag Lloyd and Mærsk. We have also put our retrofitting services to good use in power plants, significantly reducing the emissions generated by numerous plants – including one for our customer Endesa on the Balearic island of Ibiza. Our retrofit solutions, upgrades and services help boost investment returns, increase efficiency and output and reduce the costs of maintenance, fuel and lubricating oil.

Container ships with methanol and SNG in the tank

The Mærsk Halifax can carry 15,000 standard containers and was the first ocean-going vessel to have its two-stroke engine converted to methanol dual fuel. Thanks to this conversion, it can now run on environmentally friendly methanol, reducing its carbon emissions by 90%. A further ten ships have since been booked in for retrofitting for methanol operation. The container ship ElbBLUE, which has a four-stroke engine, has also been modified, making it the first vessel of its kind to be fueled by climate-neutral synthetic natural gas (SNG) generated from wind power. On its pilot trip from Brunsbüttel to Rotterdam alone, the alternative fuel managed to save 56 metric tons of CO_2.

Eco-friendly energy for the Cayman Islands

To supply more cost-efficient energy to residents, tourists and businesses on the Cayman Islands, Caribbean Utilities Company, Ltd. gave five of its engines a lifecycle upgrade (LCU): First of all, this involved upgrading the 25-year-old engines to highly efficient modern types in preparation for converting them for dual-fuel operation later on. Thanks to the LCU, some 500 metric tons of diesel fuel and 25 metric tons of lubricating oil can be saved per year.

Carbon capture, utilization and storage (CCUS)

Transforming CO_2 from harmful to useful

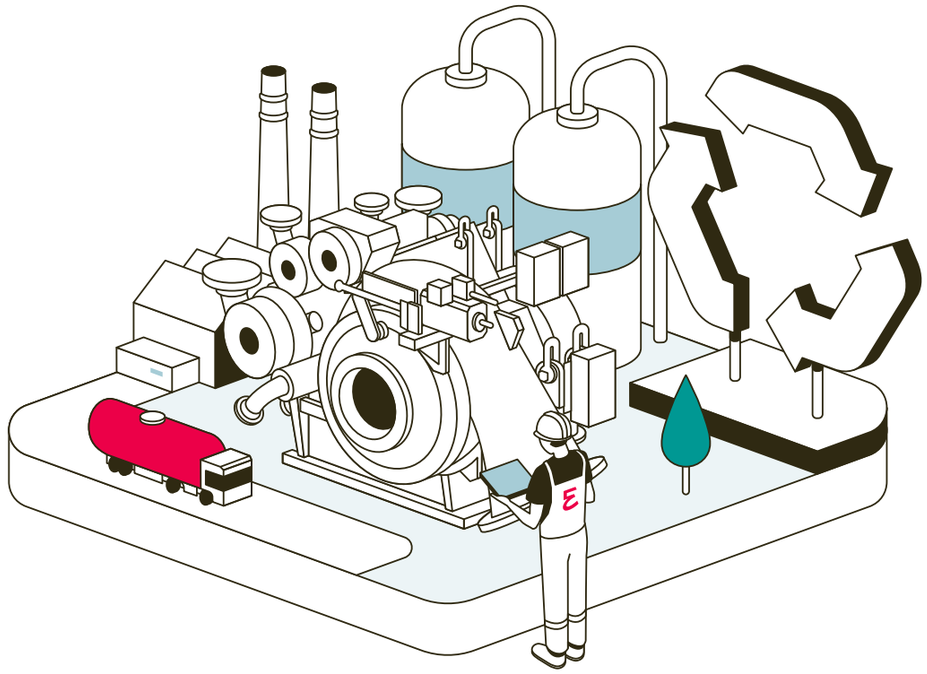

Technology
The best way to reduce carbon emissions is not to generate any in the first place. In some sectors of the global economy, however, this is not an option as the emissions they generate are considered impossible to abate. To help prevent CO_2 from being released into the atmosphere in these hard-to-abate areas, we have developed technologies for capturing carbon and compressing it.

Once it has been captured, CO_2 can be stored and even reused, transforming it into the backbone of a circular carbon economy.

Economic potential
In many industrial sectors, CO_2 is a waste product from production processes. As the pressure to decarbonize grows, this drives demand for carbon capture technologies, as well as solutions for transporting the captured CO_2, storing it over the long term and reusing it as a raw material for new products. Our compressor technology can help with this – at every stage in the CCUS value chain. For example, it can be put to use in the cement industry, the chemical industry and other heavy industries, which altogether account for around 22% of CO_2 emissions.

22%

The cement industry, the chemical industry and other heavy industries account for around 22% of CO_2 emissions.

The Everllence factor

Our integrally geared compressors have been tried and tested in 21 projects so far and are already helping to save over 145 million metric tons of CO_2. These can compress CO_2 across a range of substance characteristics and up to the highest level of pressure. We have also joined forces with some strong technology partners to develop machines and projects related to carbon capture, and provide a reliable and competitive service based on our extensive expertise.

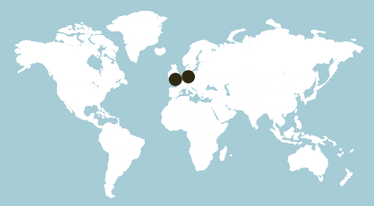

Emissions cut by 50% at Heidelberg Materials

In 2024, the world's first carbon capture plant for industrial-scale cement production was established at Heidelberg Materials: A system developed jointly by us and SLB Capturi went into operation at the company's plant in Brevik, near Oslo. This solution reduces the plant's CO_2 emissions by 400,000 metric tons per year – half of its total carbon emissions.

Porthos – pressing ahead to protect the climate

Porthos (Port of Rotterdam CO_2 Transport Hub and Offshore Storage) is a project aimed at transporting CO_2 from the Port of Rotterdam to empty gas fields in the North Sea so it can be stored there. The plan is to ferry 2.5 million metric tons per year to these natural gas storage facilities. We are contributing three integrally geared compressor systems to this project. With the help of our high-pressure technology, the CO_2 can be compressed, conveyed through a pipeline and injected into a reservoir more than three kilometers beneath the North Sea. The aim is to permanently store a total of 37 million metric tons of CO_2 in this way over a 15-year timeline.

Large-scale heat pumps

Turning up the heat on reducing emissions

Technology
Instead of burning fuels for heating and cooling, heat pumps harness heat from lakes, rivers, oceans, wastewater, industrial processes, geothermal energy or ambient air. If they are powered by green electricity, they are practically emission-free. Our large-scale heat pumps are made up of compressors, expanders and companders. With our electro-thermal energy storage (ETES) technology, we offer customers an extra option for generating and storing heat and cold and reconverting it into electricity – and we use environmentally friendly coolants too.

Economic potential
The energy transition is in fact a heat transition. After all, more than 50% of end-use energy consumption is used for producing heat, and around 40% of global carbon emissions come from heat generation. Over the last decade, the market for heat pump solutions has seen annual growth in the double-digit range. The greatest potential for this heat transition lies in the industrial sector, which is responsible for around half of the world's carbon emissions from heat generation, and in decarbonizing district heating to supply whole towns and cities with climate-neutral heating.

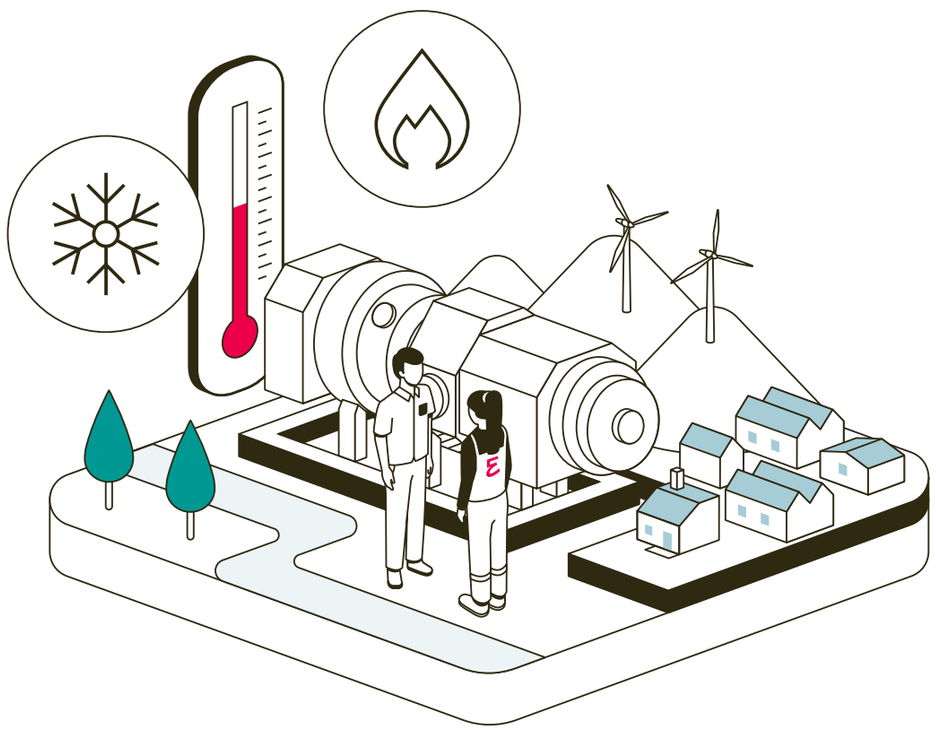

50%

More than 50% of end-use energy consumption is used for producing heat.

40%

40% of global carbon emissions come from heat generation.

The Everllence factor

We have an exceptionally versatile range of heat pumps: Our basic version offers a cost-effective way of generating clean heating and cooling, while the higher-end solution comes with both extra storage capacity and the ability to reconvert heat and cold into electricity to help manage supply and demand in the power grid. At the core of all our heat pumps are turbomachines – one of our longstanding areas of expertise.

A record-breaking heat pump in Esbjerg

We have successfully brought the world's largest CO_2-based large-scale heat pump into operation in Denmark. This system covers the heating requirements of 25,000 households and brings carbon emissions down by 120,000 metric tons per year. With a total heating capacity of 70 MW, it is the largest operational heat pump of its kind in the world, producing around 4,600 times more heat than a standard home heat pump.

Europe's largest fluvial heat pump

We are taking care of the construction of Europe's largest fluvial heat pump system for RheinEnergie. With a thermal output of 150 MW, it will supply around 50,000 households in Cologne with climate-friendly district heating – and save around 100,000 metric tons of CO_2 per year in the process.

For
a better
tomorrow
with
zero
emissions

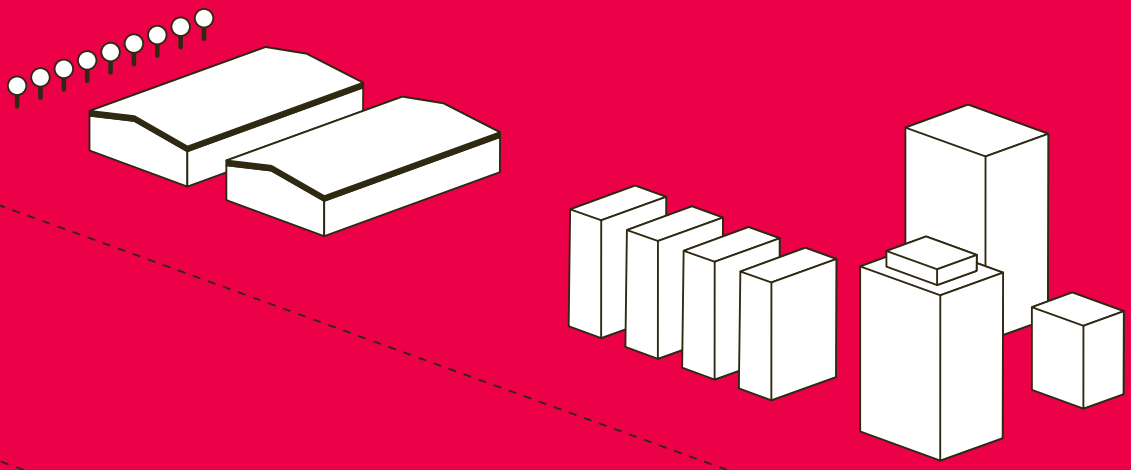

Everllence SE
86224 Augsburg, Germany
P + 49 821 322-0
info@everllence.com
www.everllence.com