Everllence

Everllence B&W
two-stroke
marine engines



Photo courtesy of: Hapag Lloyd AG

This paper describes the service experience gained from G60-, G70-, G80-, and G95-GI engine types.

Service experience for Everllence B&W ME-GI two-stroke engines

Contents

1 / Introduction, p. 4

2 / Dual-fuel GI technology, p. 5

- 2.1 Design changes from ME-GI Mk. 1 to Mk. 2 engines, p. 5
- 2.2 New gas cylinder cut-out feature, p. 6

3 / Service experience, p. 7

- 3.1 Test of gas cylinder cut-out, p. 7
- 3.2 New PU seal in PBIV top cover , p. 8
- 3.3 Spring cup added to WVFC design, p. 9
- 3.4 Update of O-ring material and back-up ring in WVFC, p. 11
- 3.5 New sealing design – window valve, p. 11
- 3.6 Extra short gas nozzle, p. 13
- 3.7 Updated PIV nozzle – fuel injection, p. 13
- 3.8 Cylinder condition, p. 14

4 / Conclusive remarks, p. 17

5 / Acronyms, p. 18



Service experience for Everllence B&W ME-GI two-stroke engines

1. Introduction

The dual-fuel, high-pressure Diesel-cycle ME-GI engine series entered service in 2014, and we have since received more than 1,000 engine orders.

Around 2020, we introduced the Mk. 2 version of the gas technology for the ME-GI engine. The ME-GI Mk. 2 engine design has over the years become the industry standard for vessels operating on methane (LNG) due to its high thermal efficiency and very low methane slip values. This paper outlines the dual-fuel GI technology and the service experience of the ME-GI Mk. 2 design, based on service experience from G60, G70, G80, and G95 engines. The service experience, including ongoing development and service testing, is divided into seven topics for the ME-GI Mk. 2 engine:

- Leaking top cover of the pilot oil and fuel booster injection valve (PBIV)
- Update of spring in window valve forced close (WVFC)
- Update of O-ring material and backup ring in WVFC
- Leaking window valve
- Gas injection valve (GIV) development
- Pilot injection valve (PIV) development and ongoing tests
- Cylinder condition

2. Dual-fuel GI technology

2.1 Design changes from ME-GI Mk. 1 to Mk. 2 engines

Figs. 1, 2, and 3 illustrate the major design changes from the ME-GI Mk. 1 to Mk. 2 engine, in particular the simplified chain pipe and gas block designs, and the rerouting of sealing and control oil through bores in the cylinder cover.

Fig. 1 shows the simplification of the chain pipes for methane supply and purge in the Mk. 2 design, so that the supply and purge use the same pipe.

Fig. 2 illustrates the simplification of the gas block from Mk. 1 to Mk. 2 design.

Additionally, sealing oil and control oil have been rerouted through bores in the cylinder cover, replacing the high-pressure pipes. This modification not only provides more space for maintenance, but also reduces the risk of high-pressure pipe rupture.

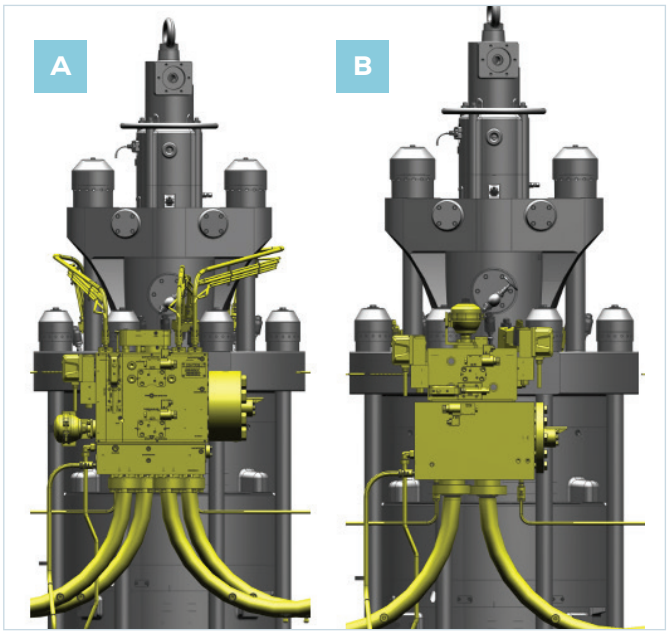

Fig. 1: Chain pipes for methane supply and purge in Mk. 1 (a) have been simplified in the Mk. 2 design (b) with only one pipe for both supply and purge operations

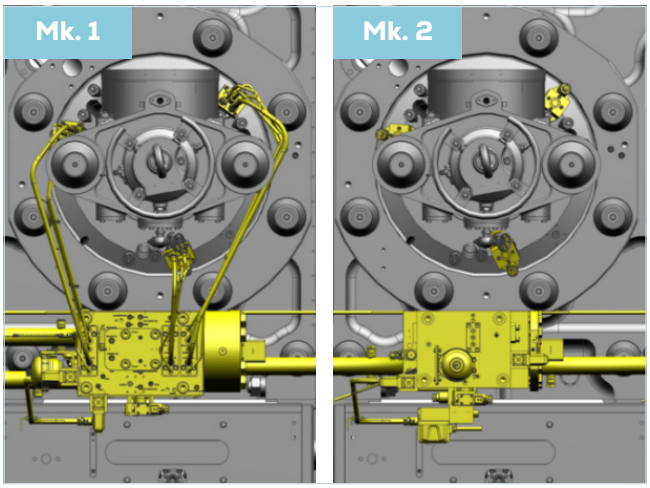

Fig. 2: Simplification of the gas block from Mk. 1 to Mk. 2

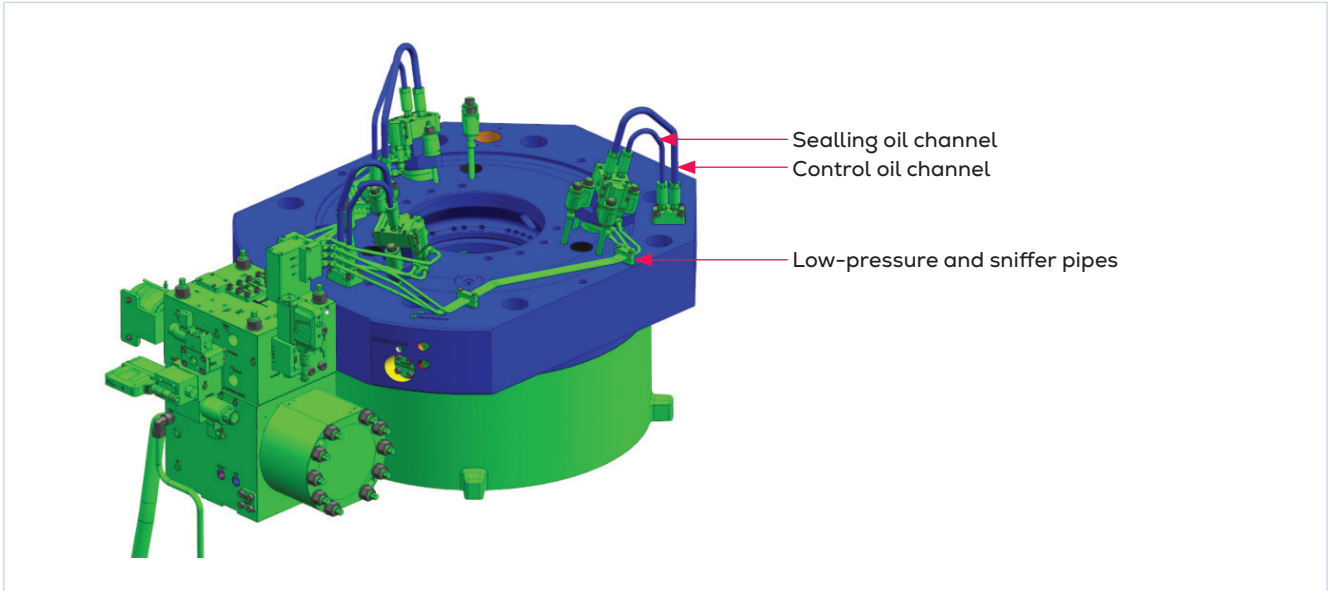

Fig. 3: Close-up rendering of the cylinder cover and gas block in the Mk. 2 design, with the rerouting of sealing oil and control oil through bores in the cylinder cover

In the Mk. 2 design shown in Fig. 4, the methane non-return valve has been replaced with a fixed orifice, which has eliminated the need for gas pressure curve fitting, and issues with sticking or damaged non-return valves.

So-called connection pieces have been incorporated in the window valve design, eliminating the sealing issues encountered on the Mk. 1 design. However, initial issues with the new window valve design shown in Fig. 5 have been experienced in the Mk. 2 engine design.

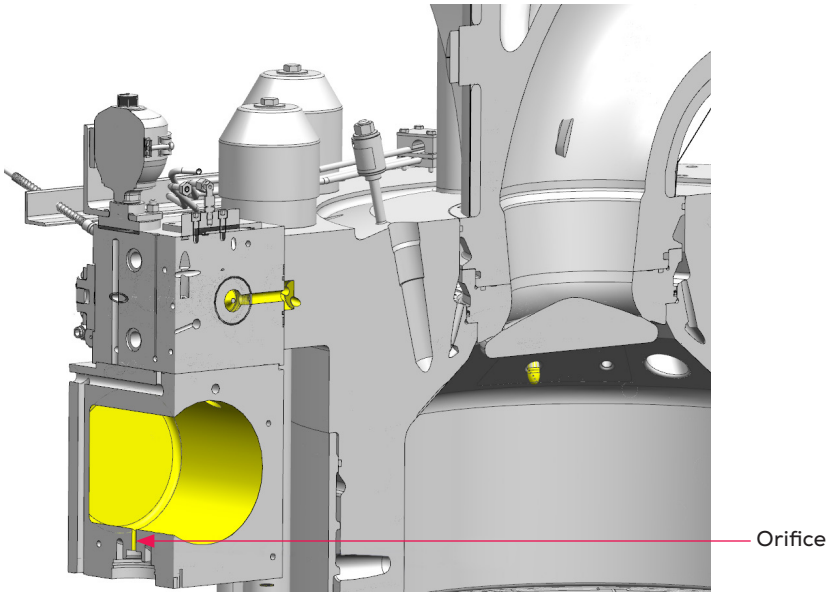

Fig. 4: Gas non-return valve replaced by a fixed orifice

2.2 New gas cylinder cut-out feature

For the ME-GI Mk. 1 engine, a single failure in the gas injection system will cause a complete gas shutdown and continued operation on liquid (diesel) fuel across all cylinders. For the ME-GI Mk. 2 engine, a failure related to a single cylinder will result in gas shutdown for the affected cylinder only and the remaining unaffected cylinders will continue in dual-fuel operation on methane. Fig. 6 illustrates the principles behind the new gas cylinder cut-out (GCCO) feature.

Note that the engine will not experience misfiring during GCCO since the cylinder experiencing gas shutdown will transition smoothly to liquid (diesel) fuel operation.
Engine control system (ECS) software version ESC SW 1909-10, or later versions support GCCO on ME-GI Mk. 2 engines.

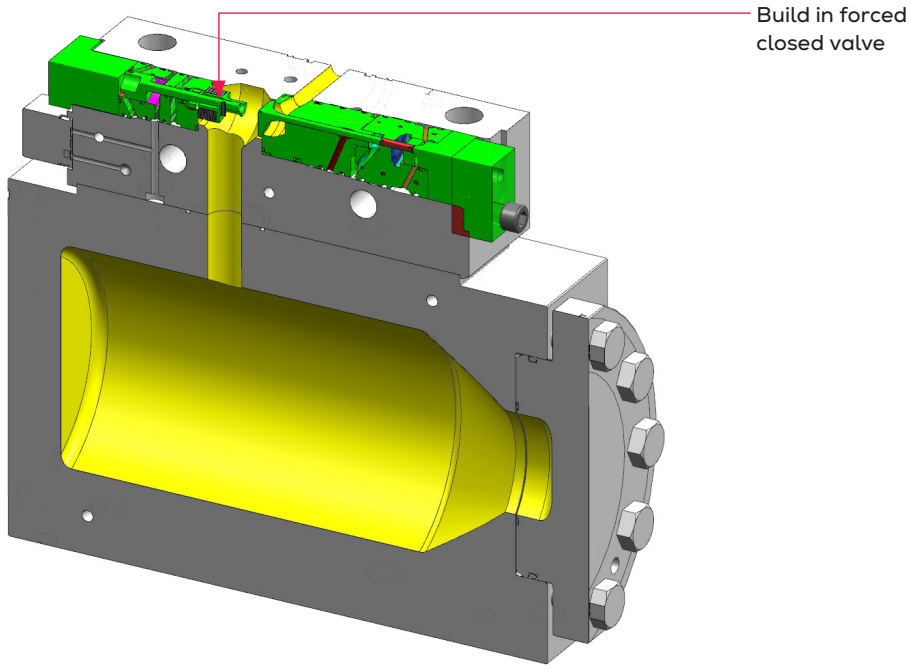

Fig. 5: Window valve for Mk. 2 design

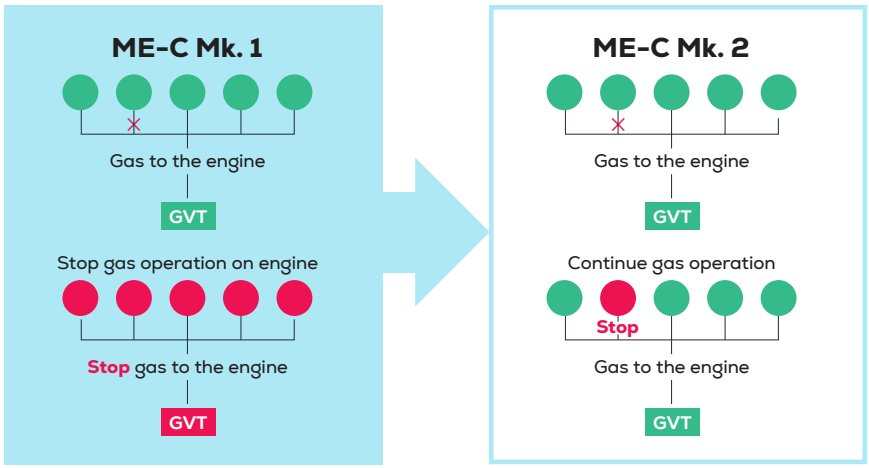

Fig. 6: Illustration of the principles behind the new gas cylinder cut-out feature

3. Service experience

3.1 Test of gas cylinder cut-out

The GCCO function was demonstrated during shop testing and in service on the container vessel in Fig. 7, belonging to the first series of 12 vessels with large-bore ME-GI engines. This series of vessels is operated by Eastern Pacific Shipping and chartered to CMA CGM, and their five-year dockings are approaching.

Fig. 8 shows the 11G90ME-C10.5-GI-EGRTC engine, which was used to test the GCCO function in service.

Fig. 9 shows the result of the GCCO service test, where cylinder No. 8 undergoes gas shutdown.

The gas channel pressure curves (green) in Fig. 9 indicate methane injection. The curves show that dual-fuel operation has ceased on cylinder No. 8, which continues in liquid fuel mode, while the remaining cylinders continue in dual-fuel mode. Only one cylinder at a time can be cut out with the GCCO function. If a second cylinder trips, the control system will switch the engine smoothly to liquid fuel (diesel) operation. Therefore, it is always recommended to eliminate the reason for the GCCO activation as soon as possible.



Fig. 7: Container vessel operated by Eastern Pacific Shipping, chartered to CMA CGM (Courtesy of Eastern Pacific Shipping)

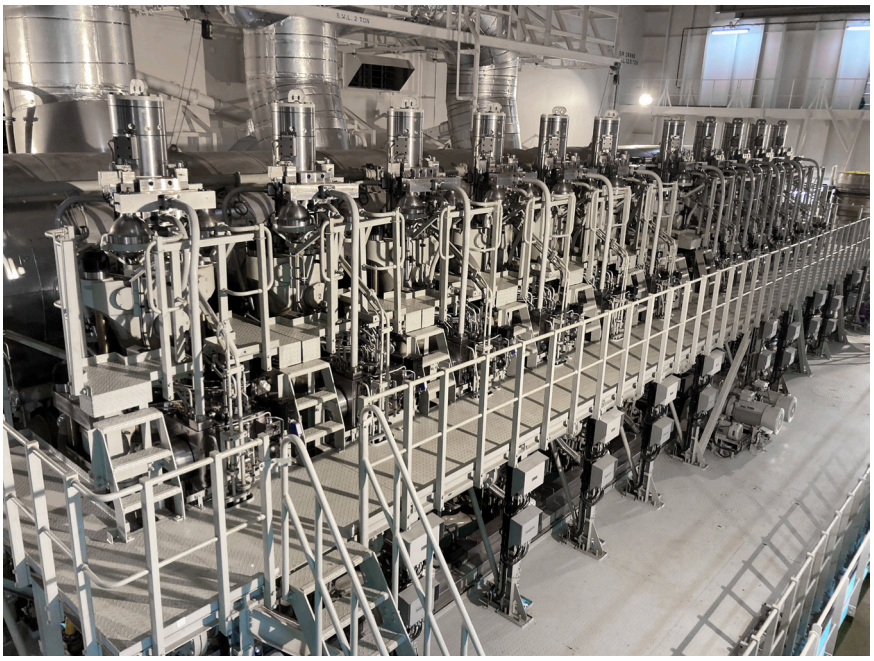

Fig. 8: 11G90ME-C10.5-GI

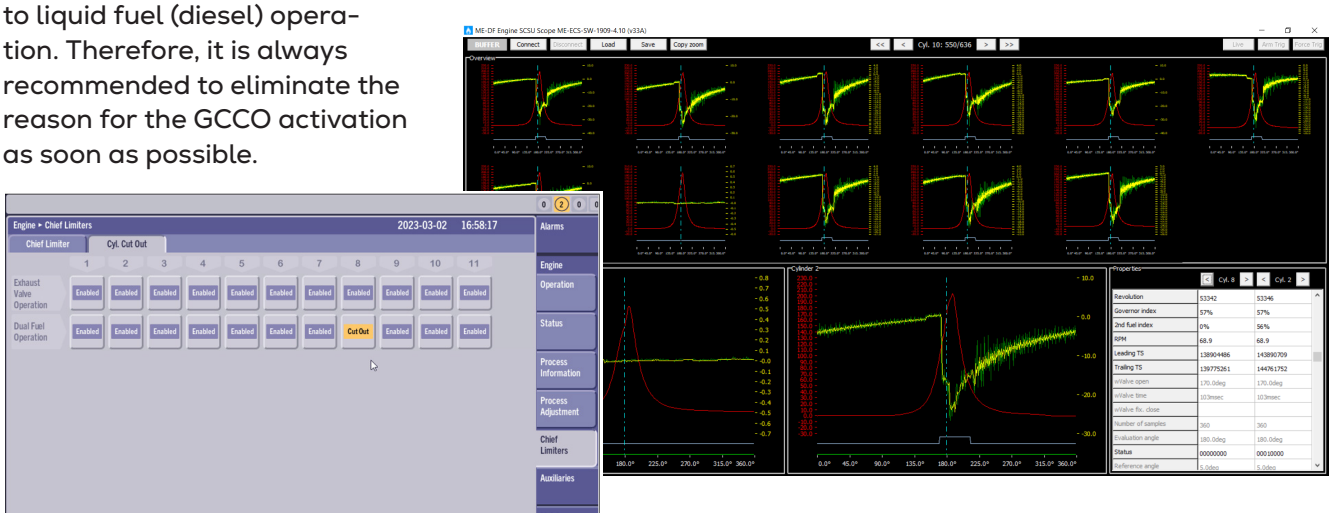

Fig. 9: Illustration of the principles behind the new gas cylinder cut-out feature

3.2 New PU seal in PBIV top cover

The top cover of the pilot booster injection valve (PBIV) has been observed leaking hydraulic oil from the top cover (Fig. 10), sometimes after only a few hundred running hours.

Leakage has been observed in most types of PBIV across various engine types. The root cause has been identified as the Viton O-ring in the top cover (Fig. 11), which becomes too soft and eventually disintegrates.

The solution has been to replace the Viton O-ring shown in Fig. 12a with the PU seal shown in Fig. 12b, which is equally easy to install as the original Viton O-ring.

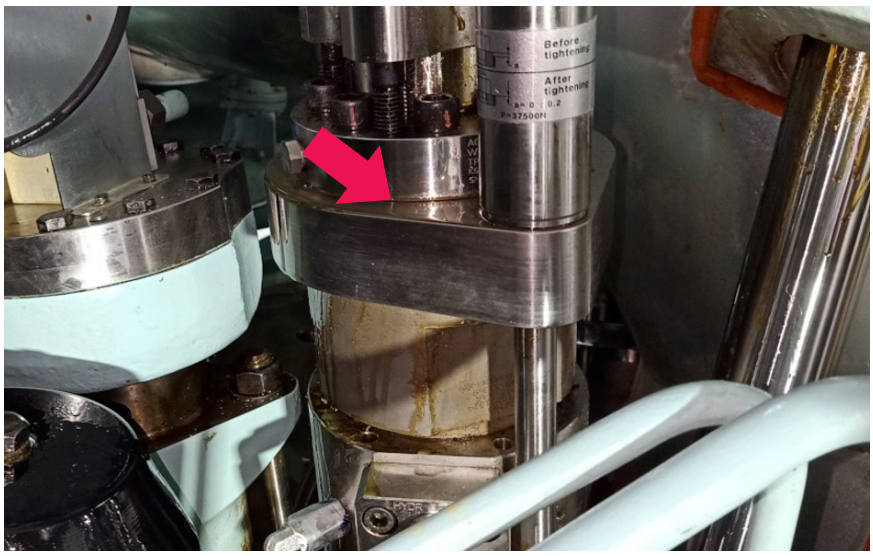

Fig. 10: Pilot oil and fuel booster injection valve (PBIV) top cover leakage

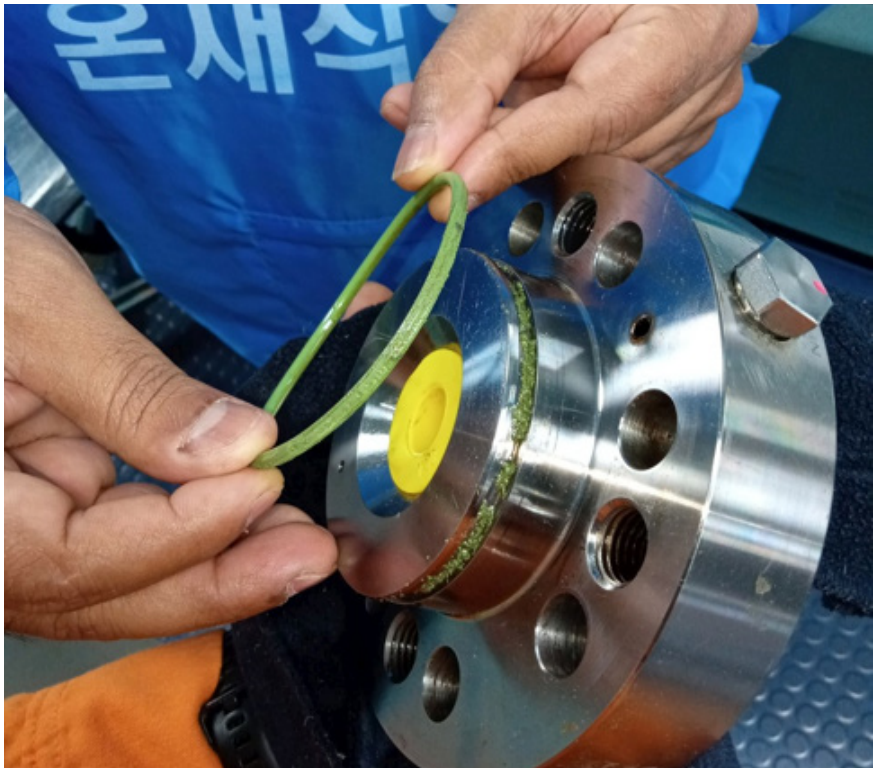

Fig. 11: Viton O-ring becomes too soft and disintegrates

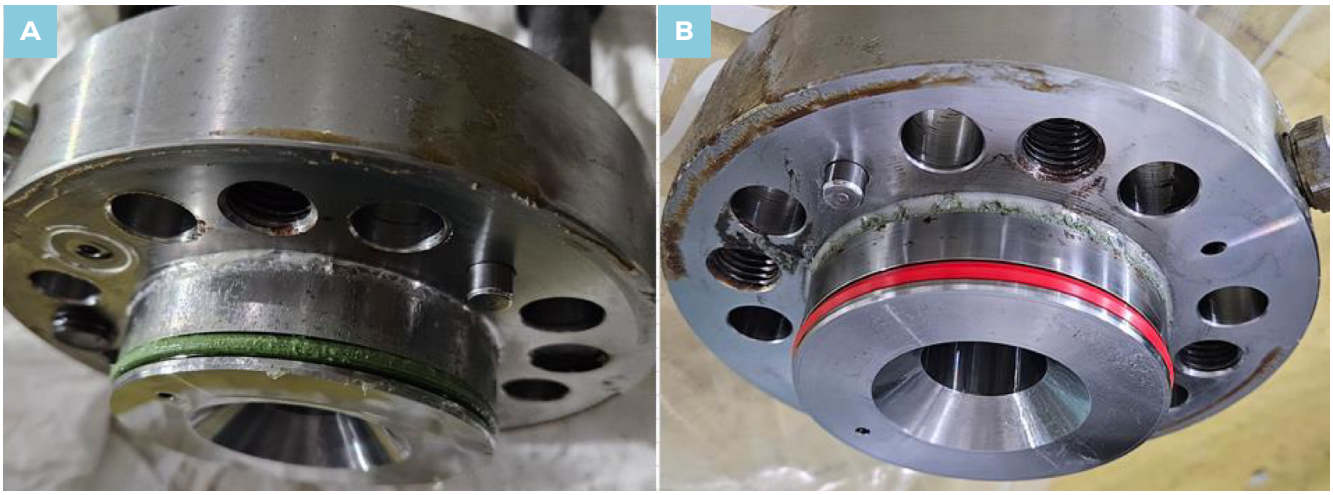

Fig. 12: The PU seal (b) has replaced the Viton O-ring (a), which caused leakage from the top cover

Fig. 13 compares the design of the old Viton O-ring (a) and the new PU seal (b).

The new PU seal has resolved the leakage issue on the top cover of PBIV.

3.3 Spring cup added to WVFC design

The ME-GI Mk. 2 gas block design has an integrated window valve arrangement, which consists of the window valve itself and a window valve 'forced close' (WVFC) part.
Fig. 14 shows the gas block with the window valve arrangement at the centre.

As shown in Fig. 15, when installing the first version of the WVFC, a Belleville spring could drop down and get wedged between the WVFC and the gas block.

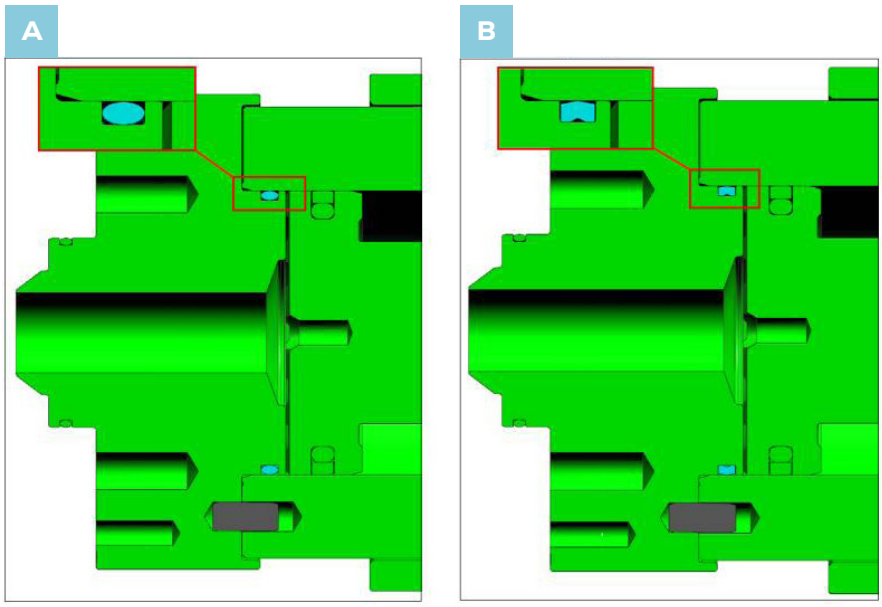

Fig. 13: a) Old O-ring design versus b) new PU seal

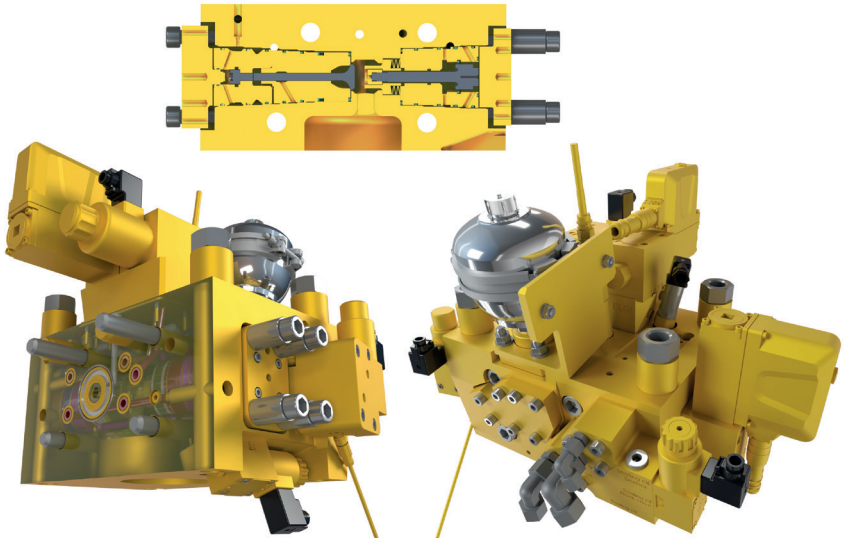

Fig. 14: ME-GI Mk. 2 gas block with the window valve arrangement at the centre



Fig. 15: The spring cup was introduced in a revision of the design

Fig. 16 shows the spring cup, which was introduced in a revision of the WVFC design, to prevent the spring in dropping down and getting wedged between the WVFC and the gas block.

This design change has eliminated the risk of springs dropping down and the associated risk of gas block damage during WVFC assembly. Fig. 17 shows a schematic illustration of gas block damage because the Belleville spring had dropped down during the installation of the original WVFC design.

Fig. 18 compares the original and the new WVFC design, which has been updated with a spring cup to prevent damage to the gas block.

Updated instructions have been issued to guide the crew when mounting a WVFC of the original design.

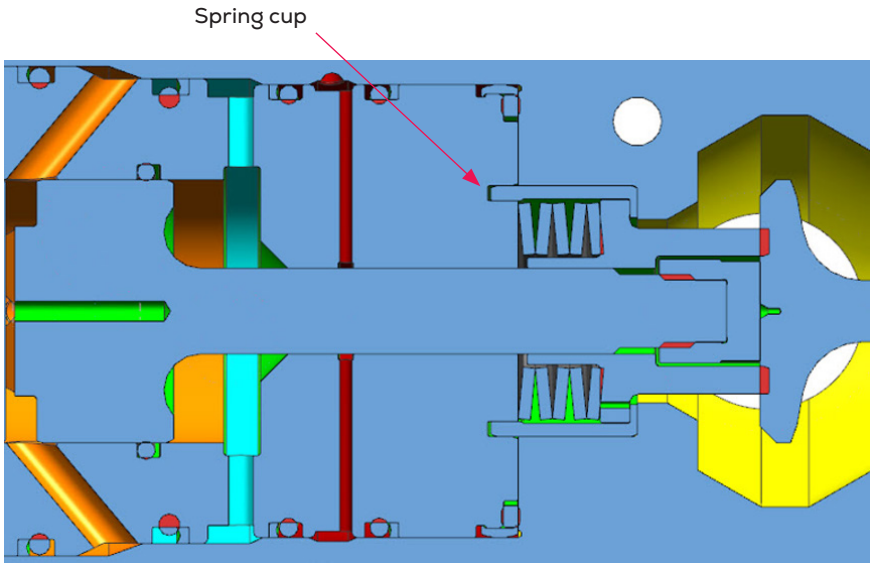

Fig. 16: Belleville spring could drop down and get wedged between the WVFC and the gas block

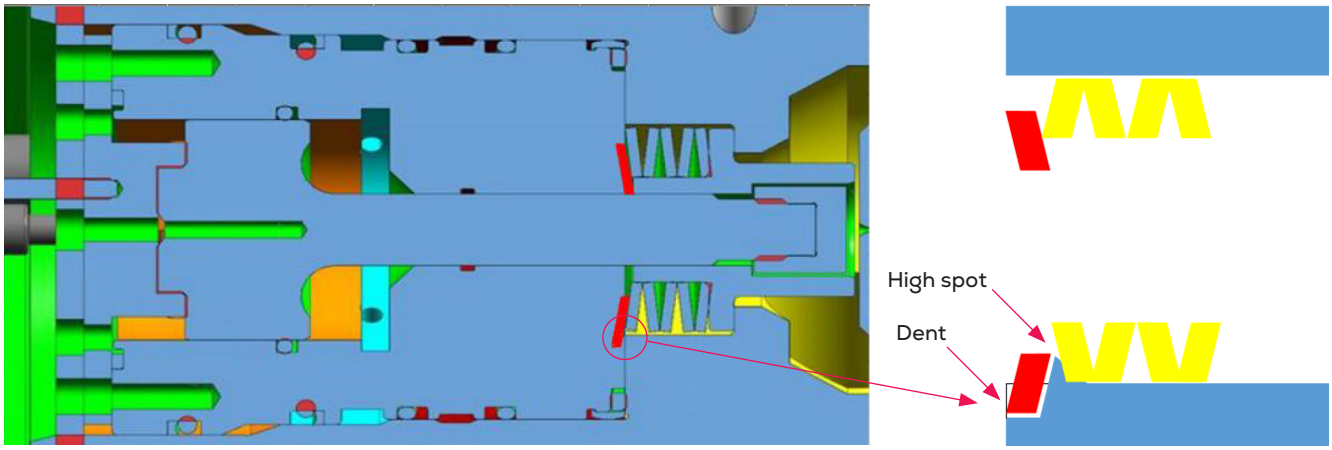

Fig. 17: Schematic illustration of gas block damage caused by the Belleville spring dropping down during installation of the original WVFC design

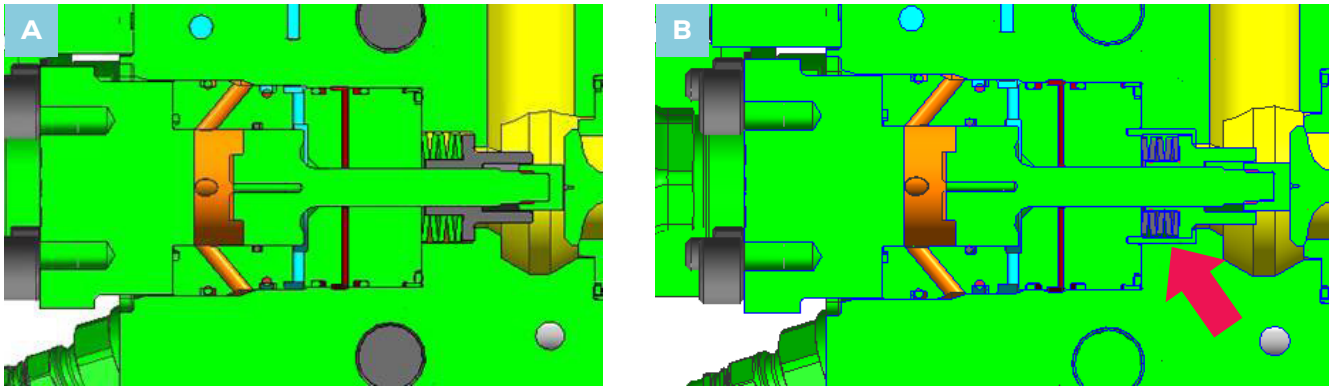

Fig. 18: Comparison of a) the original and b) the new WVFC design with a spring cup

3.4 Update of O-ring material and back-up ring in WVFC

In the WVFC, O-rings kept breaking, leaking sealing oil internally to either the outer pipe or sealing oil return/drain lines. As Fig. 19 shows, one reason was a rapid deterioration of O-rings.

Fig. 20 shows the design solution, which resolved the leakage issue from the WVFC.

The solution has been to change the O-ring material and to introduce an uncut backup ring design. To mount the new uncut backup ring, an expander tool must be used.

3.5 New sealing design – window valve

Fig. 21 shows a window valve leaking hydraulic oil externally.

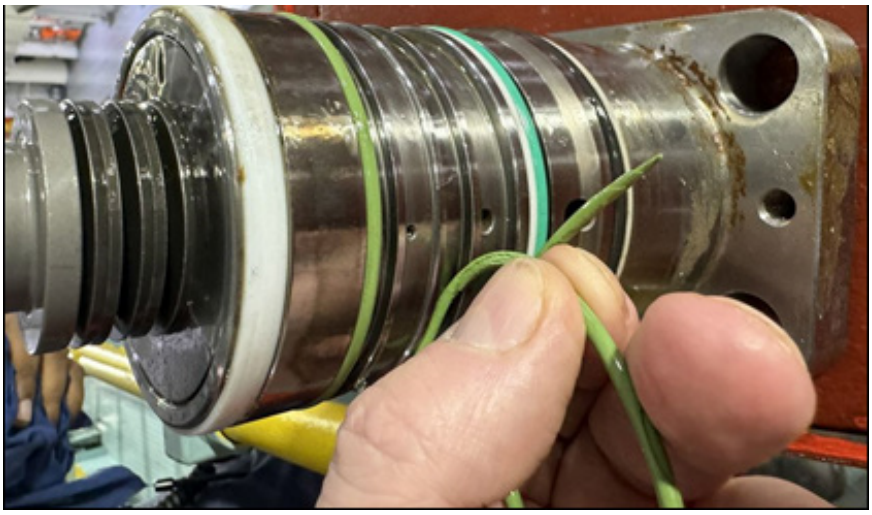

Fig. 19: O-rings deteriorating rapidly, leading to internal sealing oil leakage

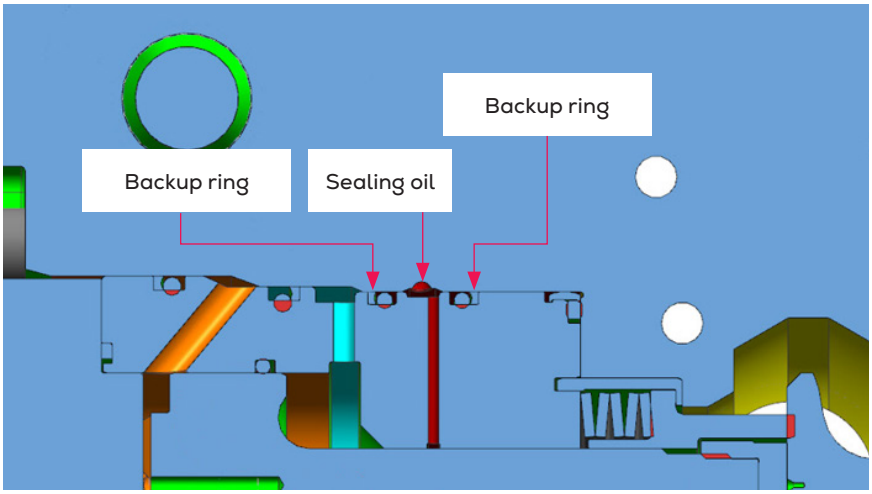

Fig. 20: Updated design with different O-rings and new backup rings



Fig. 21: External sealing oil leakage from the window valve

The leakage would get progressively worse until it affected the operation of the window valve, eventually causing dual-fuel shutdown and switch to liquid fuel oil mode. The window valve had a backup ring with an oblique cut that could damage the O-ring, and lead to its rupture. Fig. 22 shows the backup ring and the oblique cut damaging the O-ring.

The solution has been to introduce an uncut backup ring design. Also in this case, an expander tool must be used to mount the new backup ring. Fig. 23 shows all eight positions where the sealing design has been updated for the WVFC and window valve in new engine production and engines in service.

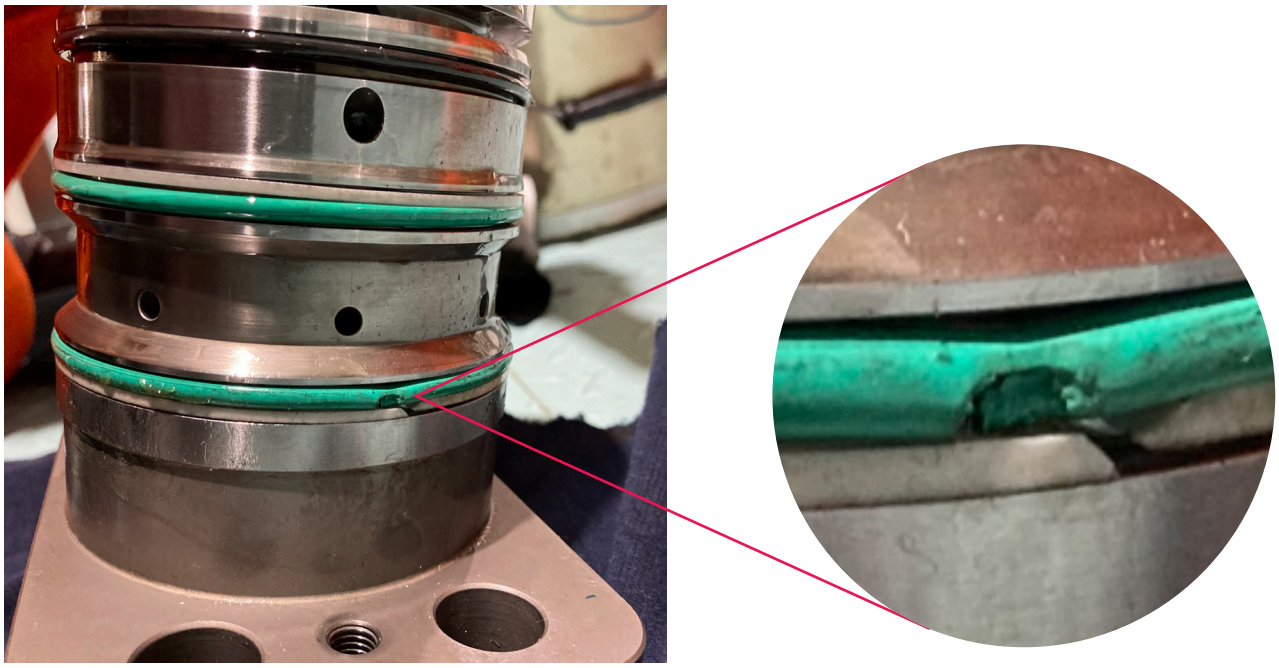

Fig. 22: The backup ring and the oblique cut damaging the O-ring

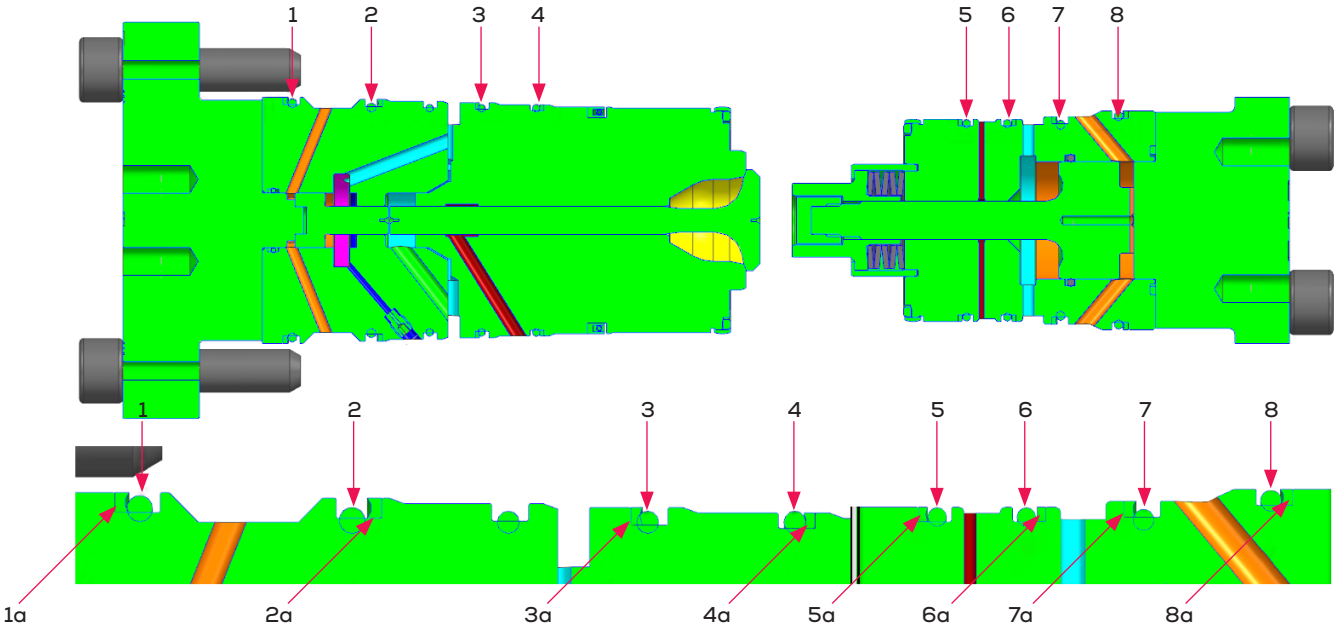

Fig. 23: Eight positions where the sealing design has been updated for the WVFC and window valve

3.6 Extra short gas nozzle

The original long design of gas nozzles suffers from hot corrosion. Fig. 24 shows an example of heavily hot-corroded long nozzles from a G60ME-C10.5-GI Mk. 2 engine.

To achieve an optimal nozzle tip temperature and prevent hot corrosion while avoiding nozzle clogging, the shorter nozzle designs in Fig. 25 have been investigated. The temperature of the nozzle tip is an important parameter in avoiding nozzle hot corrosion and clogging.

The extra-short nozzle design in Fig. 25 is running without clogging and with acceptable levels of hot corrosion for 8,000 hours in G70ME-C9.5 engines. However, clogging remains an issue for G70ME-C10.5 engines, where nozzles that are 5 mm longer will be tested as a potential solution.



Fig. 24: Long nozzle design with heavy hot corrosion

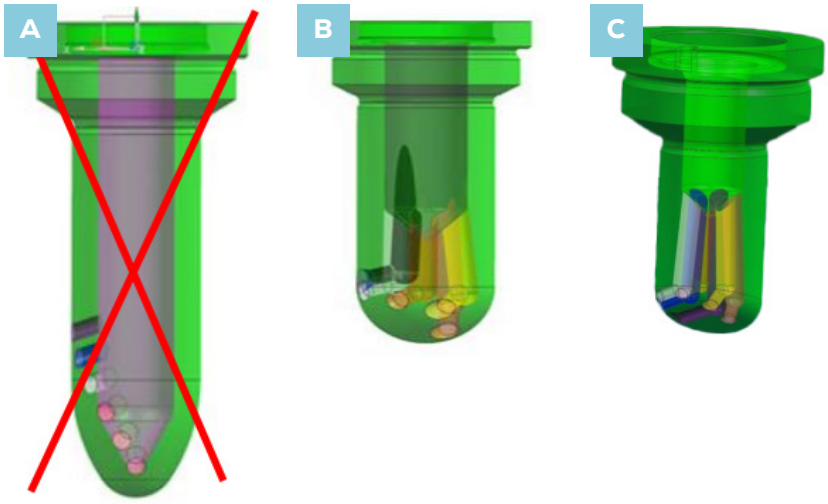

Fig. 25: a) Original long nozzle, b) temporary short nozzle, and c) extra-short nozzle

3.7 Updated PIV nozzle – fuel injection

The pilot injection valve (PIV) has been introduced on the ME-GI Mk. 2 engines for fuel injection. Fig. 26 shows the design of the PIV with a differentiated cut-off shaft lift – low lift (1.2 mm) for optimal pilot oil injection and high lift (2.8 mm) for full liquid (fuel) injection.

Fig. 27 zooms in on the nozzle tip to give a more detailed view of the nozzle hole configuration for pilot oil and full fuel injection.

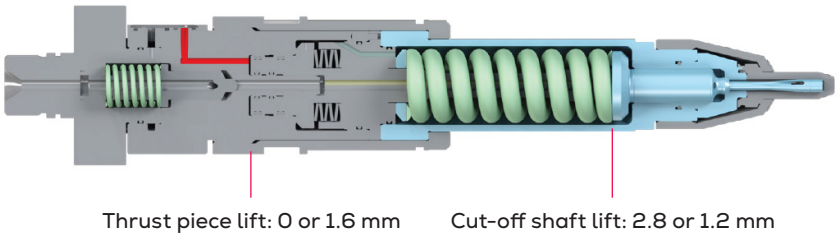

Fig. 26: G60 PIV with differentiated cut-off shaft lift – low lift (1.2 mm) for optimal pilot oil injection and high lift (2.8 mm) for full liquid (fuel) injection in fuel (diesel) mode

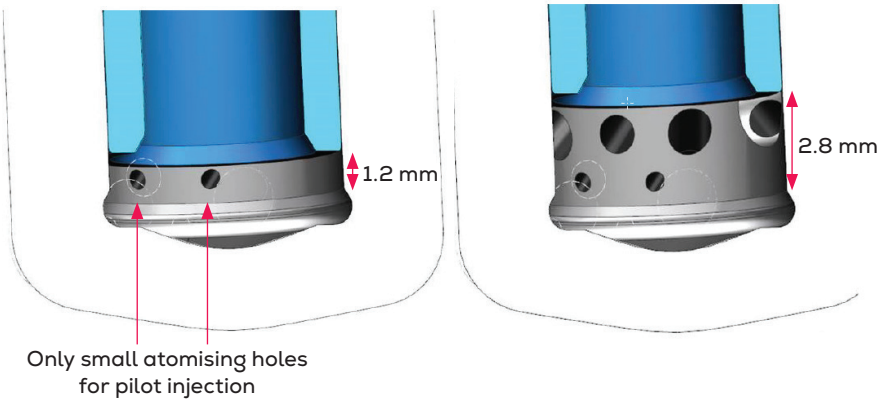

Fig. 27: Nozzle hole configuration for pilot oil (low lift – 1.2 mm) and full fuel injection (high lift – 2.8 mm)

In several instances, the original compound-type PIV nozzle has experienced cracking caused by thermal fatigue, as shown in Fig. 28.

Presently, a PIV nozzle in H13 tool steel is being service-tested, and the crack issue is under control. However, this nozzle suffers from clogging of the small pilot oil injector holes. Fig. 29 shows the test setup for testing larger pilot oil injection holes and an increased number of injection holes to reduce the frequency of clogging.

For 80- and 95-bore engines, the nozzle tested will have four pilot oil injection holes, each with a 0.55 mm diameter, instead of two holes with 0.4 mm diameter for 80-bore engines and two with 0.45 mm diameter for 95-bore engines. For 50-, 60- and 70-bore engines, the nozzle being tested will have one pilot injection hole with a diameter of 0.8 mm, replacing the previous configuration of one hole with 0.4 mm diameter for 50-bore engines and one with 0.45 mm diameter for 60 and 70 bore engines, respectively. However, the test program has been delayed due to the need for amendments to the IMO technical file before testing can commence.

As a short-term countermeasure, we recommend deactivating the reduced lift (RELI) function. This will reduce the risk of clogging; however, it will increase the pilot oil amount somewhat.

3.8 Cylinder condition

Wear of cermet coating on piston top rings has been recorded since the launch of the ME-GI engines. The cermet coating wear determines the need for piston overhaul as this



Fig. 28: Original compound type PIV nozzle with cracks

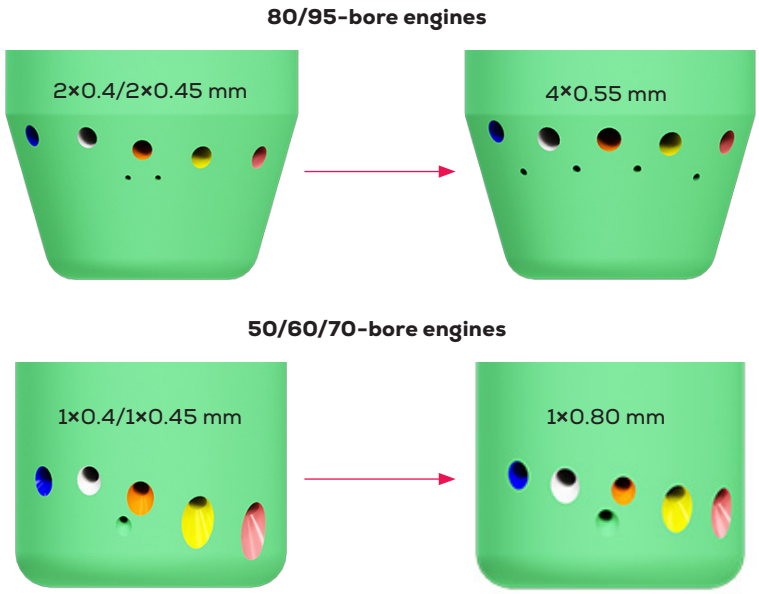

Fig. 29: Nozzles with larger pilot oil injection holes and an increased number of injection holes

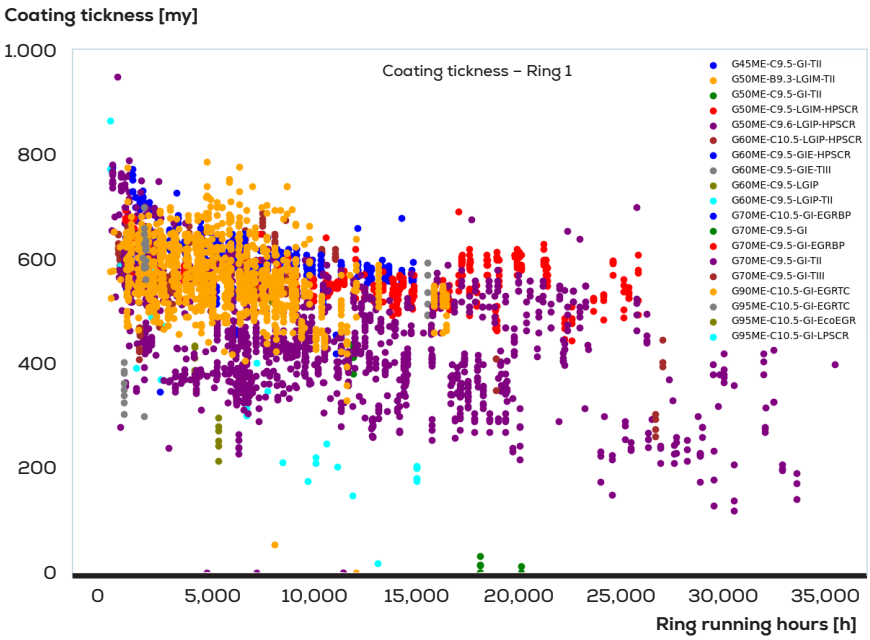

Fig. 30: Plot of top ring coating measurements for all dual-fuel engine types. Data includes over 35,000 piston ring running hours

coating is meant as a 'lifetime' coating. Our database of coating thickness recordings for all sizes of ME-GI engines in Fig. 30 demonstrates a remarkably long coating lifetime, easily achieving 32,000 hours (or five years) of operation between piston overhauls.

Naturally, there may be occasions when earlier piston overhauls are necessary due to other factors, such as piston ring breakage or loss of tension. However, dock-to-dock operation without piston overhaul is standard practice for today's ME-GI-powered fleet. Fig. 31 presents a subset of cermet coating thickness data for the G70-C9.5-GI engine, which has the highest number of running hours.

In 2019, the Service Letter in Fig. 32 was issued to announce the extension of the piston overhaul interval for 70-bore engines from 16,000 to 24,000 hours – a decision based on the data in Fig. 30 and Fig. 31.

However, data indicates that a further extension of time-based intervals beyond 24,000 hours is possible – see Fig. 33.

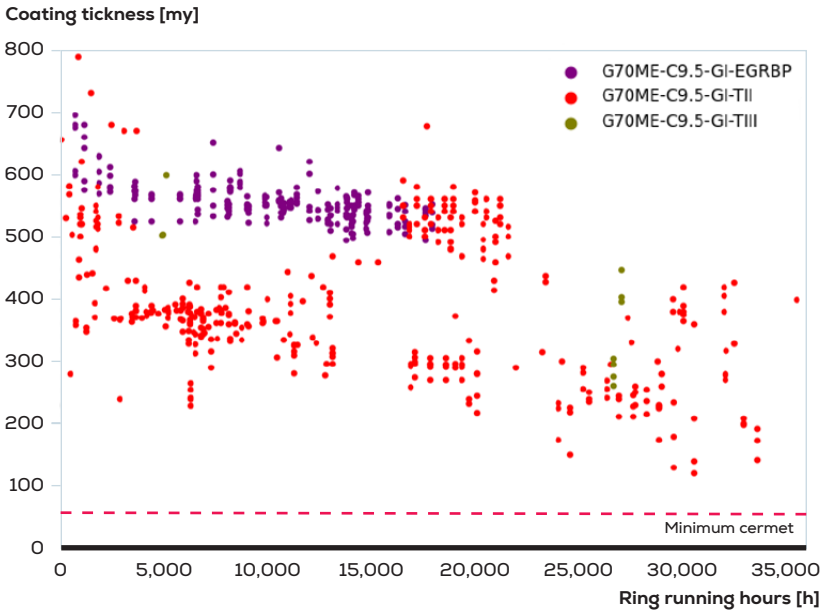

Fig. 31: Measurement of cermet coating thickness on the first piston ring. Data collected from nine vessels, encompassing 17 engines and a total of 85 cylinder units, over a five-year service period

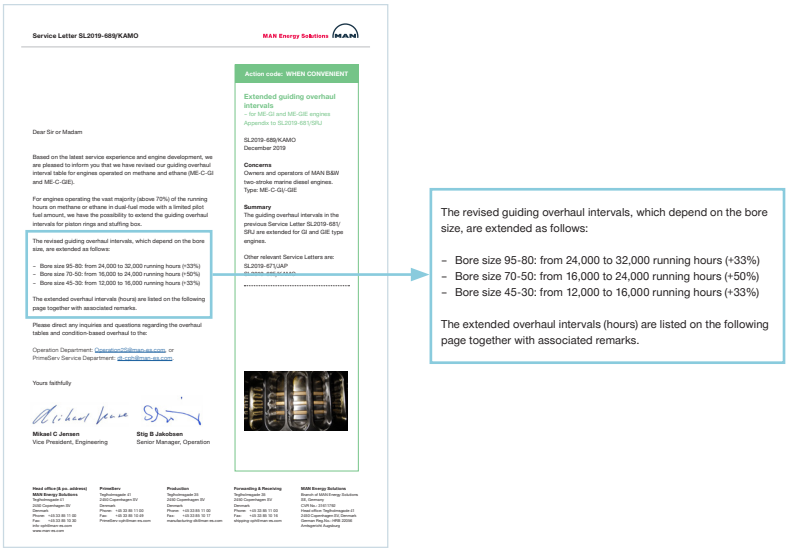
Service Letter SL2019-689/KAMO

MAN Energy Solutions

Action code: WHEN CONVENIENT

Extended guiding overhaul intervals

– for ME-GI and ME-GIE engines

Appendix to SL2019-681/SRU

SL2019-689/KAMO

December 2019

Concerns

Owners and operators of MAN B&W two-stroke marine diesel engines.

Type: ME-C-GI/-GIE

Summary

The guiding overhaul intervals in the previous Service Letter SL2019-681/SRU are extended for GI and GIE type engines.

Other relevant Service Letters are:

SL2019-671/JAP

Dear Sir or Madam

Based on the latest service experience and engine development, we are pleased to inform you that we have revised our guiding overhaul interval table for engines operated on methane and ethane (ME-C-GI and ME-C-GIE).

For engines operating the vast majority (above 70%) of the running hours on methane or ethane in dual-fuel mode with a limited pilot fuel amount, we have the possibility to extend the guiding overhaul intervals for piston rings and stuffing box.

The revised guiding overhaul intervals, which depend on the bore size, are extended as follows:

- Bore size 95-80: from 24,000 to 32,000 running hours (+33%)
- Bore size 70-50: from 16,000 to 24,000 running hours (+50%)
- Bore size 45-30: from 12,000 to 16,000 running hours (+33%)

The extended overhaul intervals (hours) are listed on the following page together with associated remarks.

Please direct any inquiries and questions regarding the overhaul tables and condition-based overhaul to the:

Operation Department: Operation2S@man-es.com or

PrimeServ Service Department: sl-cph@man-es.com

Yours faithfully

Mikael C Jensen
Vice President, Engineering

Stig B Jakobsen
Senior Manager, Operation

The revised guiding overhaul intervals, which depend on the bore size, are extended as follows:

- Bore size 95-80: from 24,000 to 32,000 running hours (+33%)
- Bore size 70-50: from 16,000 to 24,000 running hours (+50%)
- Bore size 45-30: from 12,000 to 16,000 running hours (+33%)

The extended overhaul intervals (hours) are listed on the following page together with associated remarks.

Fig. 32: Service Letter issued in 2019 (SL2019-689), extending the time-based piston overhaul interval from 16,000 hours to 24,000 hours for 70-bore ME-GI/GIE engines due to the low wear

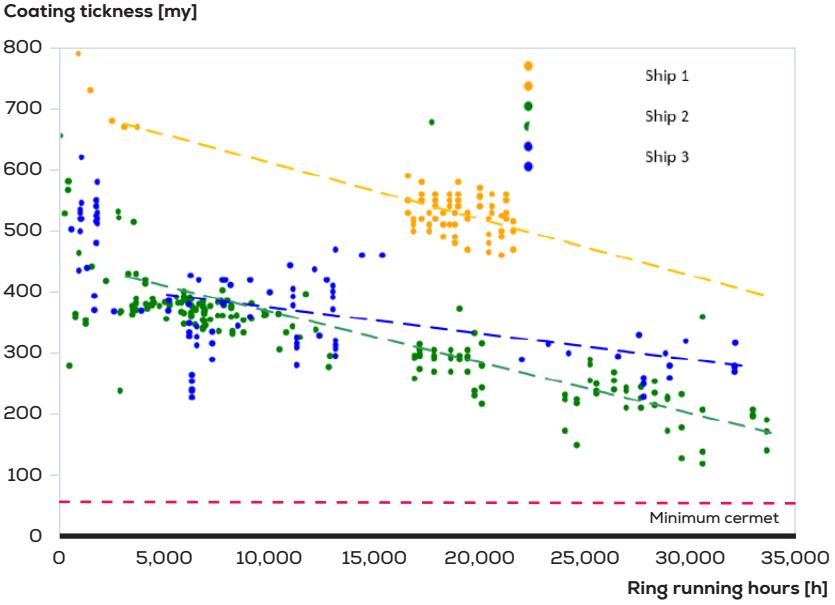

Fig. 33: Cermet coating thickness on the first piston ring, measured on three ships and a total of 30 cylinder units

Currently, some owners are already benefiting from condition-based piston overhaul intervals of 32,000 hours, allowing for dock-to-dock operations with five years between dockings.

Fig. 34 shows a further subset of data for G70ME-C9.5-GI engines, indicating very low cylinder liner wear.

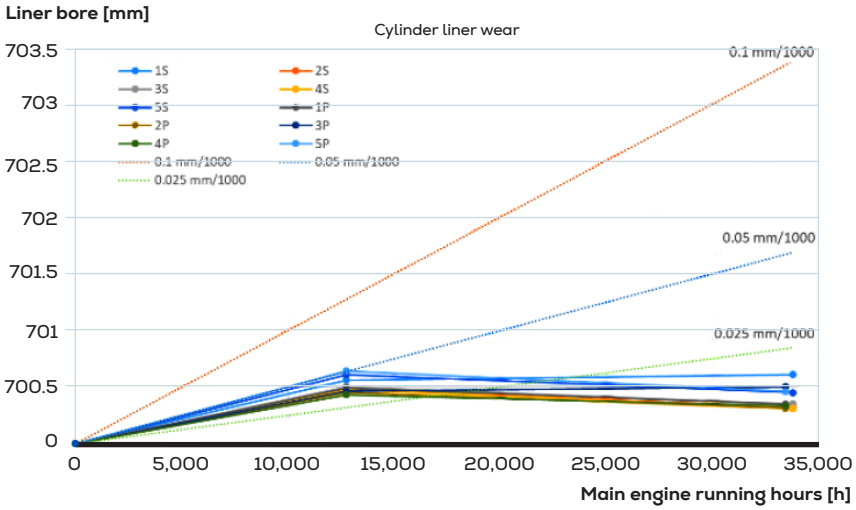

Fig. 34: Measurement of cylinder liner wear during a five-year service period In fact, the cylinder lifetime approaches the engine lifetime

4. Conclusive remarks

More than a decade ago, the ME-GI technology was introduced into service for propulsion of a wide range of ship types, which at the beginning ranged from LNG carriers to container vessels, PCTCs, tankers, and bulk carriers.

Today, the ME-GI high-pressure engine is the de facto industry standard in most ship types when methane is selected as the fuel, due to the high thermal efficiency and very low methane slip figures of the engine.

The present paper outlines some of the service-related issues experienced to date, focusing on the ME-GI Mk. 2 version of the ME-GI technology, which was introduced around five years ago. We will continue to follow up in the coming months and years as further engines and engine types enter service.

5. Acronyms

ECS	engine control system
GI	gas injection
GIV	gas injection valve
GCCO	gas cylinder cut-out
GVT	gas valve train
LNG	liquefied natural gas
PBIV	pilot booster injection valve
PIV	pilot injection valve
PCTC	pure car and truck carrier
RELI	reduced lift
WVFC	window valve forced close

Everllence

Everllence
2450 Copenhagen SV, Denmark
P + 45 33 85 11 00
info@everllence.com
www.everllence.com

All data provided in this document is non-binding. This data serves informational purposes only and is not guaranteed in any way. Depending on the subsequent specific indivdual projects, the relevant data may be subject to changes and will be assessed and determined individually for each project. This will depend on the particular characteristics of each individual project, especially specific site and operational conditions.

Copyright © Everllence. 5510-0284-00 Sep 2025
Printed in Denmark